THIS DRAWING IS UNPUBLISHED. RELEASED FOR PUBLICATION - ,- .
© COPYRIGHT - BY TYCO ELECTRONICS CORPORATION. ALL RIGHTS RESERVED.

LOC	DIST
AD	39

REVISIONS

P	LTR	DESCRIPTION	DATE	DWN	APVD
	H	ECO-07-016583	11DEC07	MB	JO

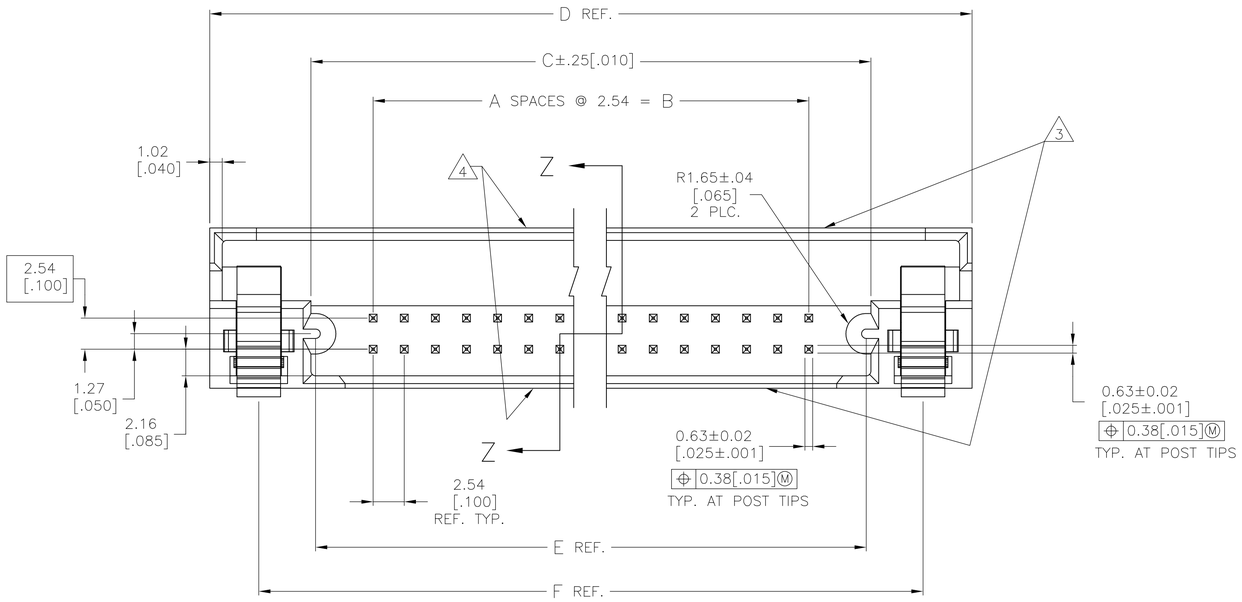

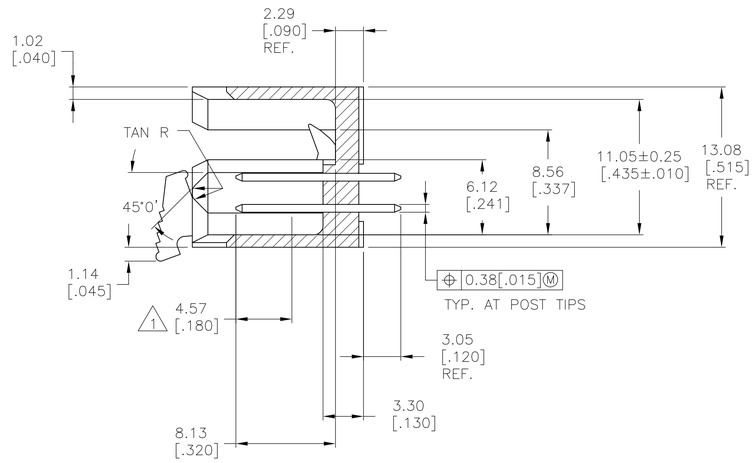

SECTION Z-Z

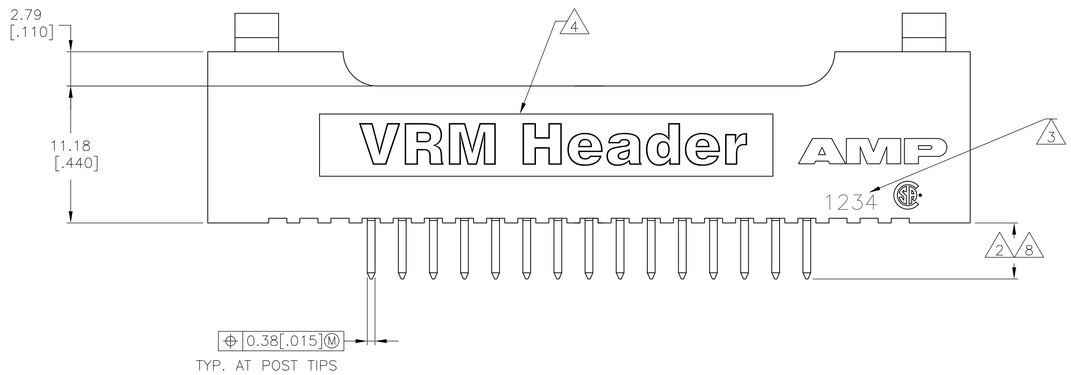

1. FINISH OVER INDICATED AREA: 0.000762 [.000030] MIN GOLD OVER 0.00127[.000050] NICKEL. MEETS EIA-364-53 POROSITY, MEAS. AREA .130 FROM TIP.
2. FINISH OVER INDICATED AREA: 0.00254[.000100]-0.00635[.000250] BRIGHT TIN-LEAD OVER 0.00127[.000050] NICKEL.
3. DATE CODE EITHER SIDE, WITH COUNTRY OF ORIGIN IF APPLICABLE.
4. "VRM Header" MOLDED INTO BOTH SIDES OF HOUSING. WITH MATTE BACKGROUND.
5. MATERIAL: GLASS FILLED VO THERMOPLASTIC COLOR BLACK
6. RESTRICTED TO INTEL VRM PROGRAM
7. PRELIMINARY PART - NOT RELEASED FOR PRODUCTION.
8. FINISH OVER INDICATED AREA: 0.00254-0.00635 [.000100-.000250] MATTE TIN OVER 0.00127 [.000050] NICKEL
9. ROHS 2002/95/EC COMPLIANT

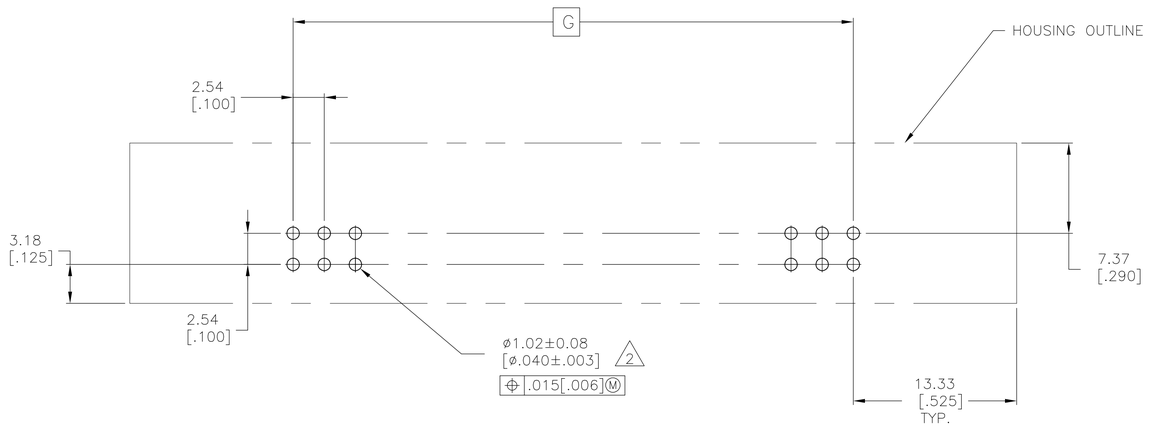

RECOMMENDED PCB HOLE LAYOUT

9	8	99.06 [3.900]	117.73 [4.635]	108.46 [4.270]	125.73 [4.950]	109.22 [4.300]	99.06 [3.900]	39	80	5-146205-4
9	8	35.56 [1.400]	54.23 [2.135]	44.96 [1.770]	62.23 [2.450]	45.72 [1.800]	35.56 [1.400]	14	30	5-146205-1
7	2	99.06 [3.900]	117.73 [4.635]	108.46 [4.270]	125.73 [4.950]	109.22 [4.300]	99.06 [3.900]	39	80	146205-4
OBS	2	- -	- -	- -	- -	- -	- -	-	-	146205-3
OBS	2	- -	- -	- -	- -	- -	- -	-	-	146205-2
	2	35.56 [1.400]	54.23 [2.135]	44.96 [1.770]	62.23 [2.450]	45.72 [1.800]	35.56 [1.400]	14	30	146205-1
FINISH		G	F	E	D	C	B	A	NO OF POSN.	PART NUMBER

THIS DRAWING IS A CONTROLLED DOCUMENT.

DIMENSIONS: mm [INCHES]

TOLERANCES UNLESS OTHERWISE SPECIFIED:
0 PLC ± -
1 PLC ± -
2 PLC ± -
3 PLC ± 0.13[.005]
4 PLC ± -
ANGLES ± -

MATERIAL 5

FINISH 1 2 8

DWN J KNAUB 11-23-94
CHK H PALEY 11-23-94
APVD H PALEY 11-23-94

PRODUCT SPEC -
APPLICATION SPEC -
WEIGHT -

Tyco Electronics
Tyco Electronics Corporation
Harrisburg, Pa 17105-3608

NAME
ASSEMBLY, VRM 7 HEADER, MOD II, DOUBLE ROW, 2 PIECE, .100 X .100 CL, .025 SQ. POST, WITH BOARDLATCH

SIZE	CAGE CODE	DRAWING NO	RESTRICTED TO
A1	00779	C-146205	-

CUSTOMER DRAWING

SCALE	SHEET	REV
4:1	1 OF 2	H

THIS DRAWING IS UNPUBLISHED. RELEASED FOR PUBLICATION -.- .
© COPYRIGHT - BY TYCO ELECTRONICS CORPORATION. ALL RIGHTS RESERVED.

LOC	DIST
AD	39

REVISIONS

P	LTR	DESCRIPTION	DATE	DWN	APVD
	—	SEE SHEET 1	—	—	—

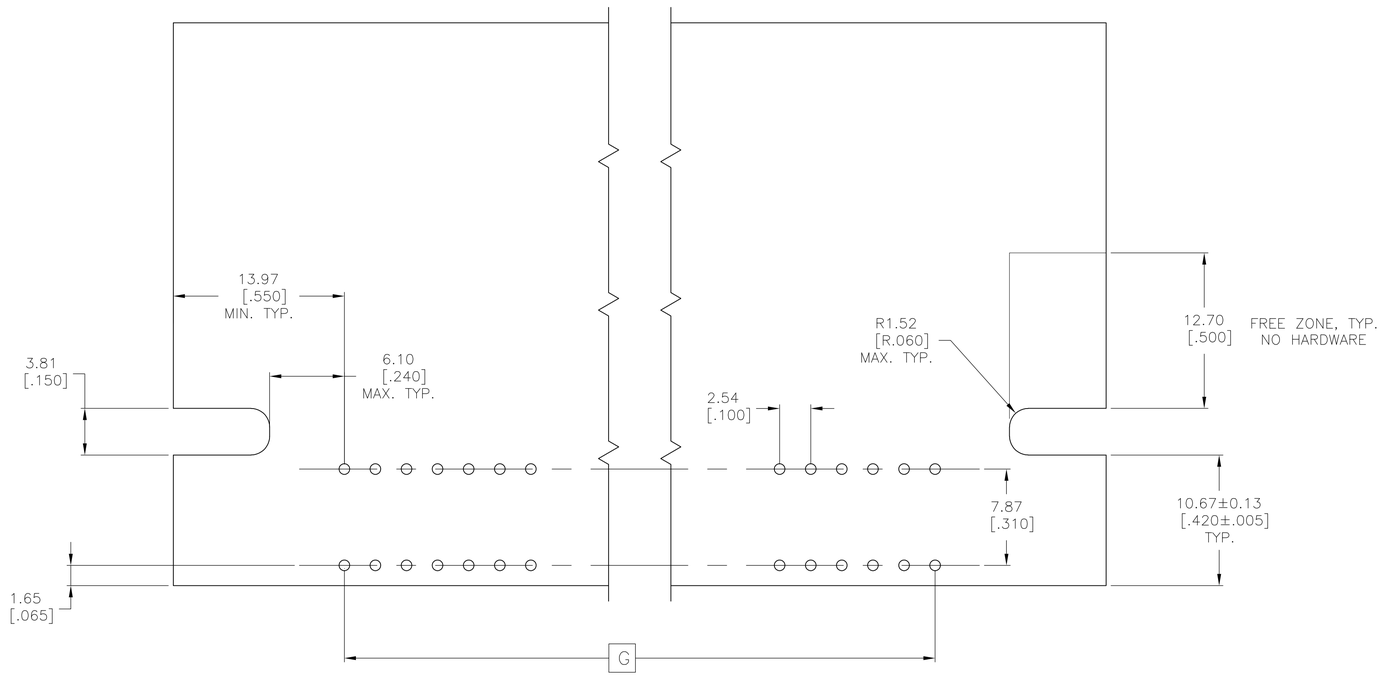

BOARD LAYOUT FOR LATCHING AMP 2PC. RECEPTACLE

THIS DRAWING IS A CONTROLLED DOCUMENT.		DWN J KNAUB 11-23-94	Tyco Electronics Corporation Harrisburg, Pa 17105-3608
DIMENSIONS: mm [INCHES]	TOLERANCES UNLESS OTHERWISE SPECIFIED: 0 PLC ± – 1 PLC ± – 2 PLC ± – 3 PLC ± 0.13[.005] 4 PLC ± – ANGLES ± –	CHK H PALEY 11-23-94	NAME ASSEMBLY, VRM 7 HEADER, MOD II, DOUBLE ROW, 2 PIECE, .100 X .100 CL, .025 SQ. POST, WITH BOARDLATCH
		APVD H PALEY 11-23-94	
		PRODUCT SPEC —	
		APPLICATION SPEC —	SIZE A1 · CAGE CODE 00779 · DRAWING NO C-146205 · RESTRICTED TO —
MATERIAL	FINISH	WEIGHT —	
		CUSTOMER DRAWING	SCALE 4:1 · SHEET 2 OF 2 · REV H