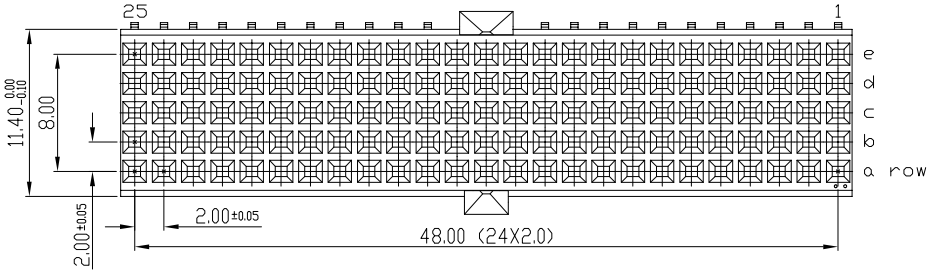

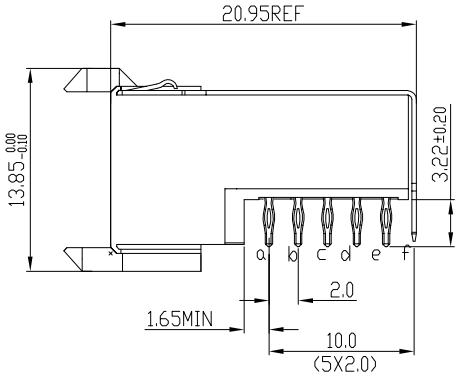

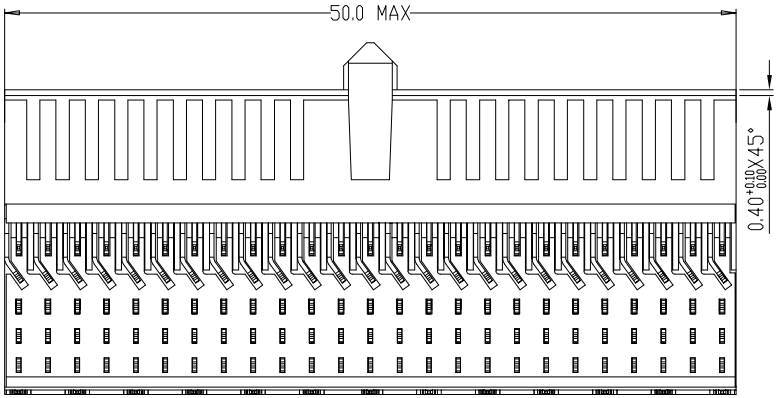

PERFORMANCE CHARACTERISTICS

CURRENT RATING: 1.5 A AT 20°C (FULLY LOADED)
1 A AT 70°C (FULLY LOADED)

RATED VOLTAGE:500 V AC (CONT /CONT)

OPERATING TEMPERATURE : -55°C TO 125°C

CONTACT RESISTANCE :20 mΩ MAX

INSERTION FORCE: 0.75N MAX/CONT

EXTRACTION FORCE : 0.15N MIN /CONT

INSULATION RESISTANCE: 10^4 MΩ MIN

NOTES

1. 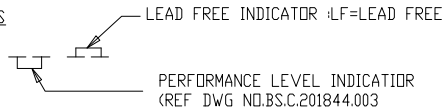

2. THIS PRODUCT IS CSA APPROVED.
   THIS PRODUCT IS UL RECOGNIZED.

3.FOR RECOMMENDED PTH DIMENSIONS REFER DRAWING :BS.A.201572.001

4.THIS PRODUCT (LF) MEETS EUROPEAN UNION DIRECTIVES AND OTHER COUNTRY REGULATIONS AS DESCRIBED IN GS-22-008

LAY-OUT
P.C.B.- HOLE

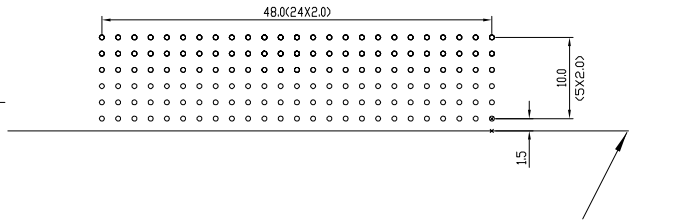

rev	ecn no	dr	date
A	conversion version 03	KN	14-09-01
B	EC 10088	MF	20-11-01
C	I05-00858	MINI	06-06-05
D	DG05-0278	Kason	02-08-05
E	DG07-0141	Kason	04-09-07
F	DG07-0362	Kason	05-09-07
G	DG10-0110	NZ	10-13-10

Material			Spec ref		
Mat code			✓	tolerance: 1DEC±0.2 1DEC 2DEC ± 0.1 2DEC ANGLES±1° HOEKEN	projection / MM
Heattreat					
Plating/Finish					
Dr	M.Fret	18-04-00		size A4	Scale 1.500
Eng			Product family	MILLIPICS	
Chr			Model Name		ECN
Appr			Model Revision		REL Level
title	MPACS 5+2R RA RCP CONN TYPE AB		dwg no	BS,C ,201444,049	Rev. G
Pro/E file	catalog no	HM2R65PA5108----	CUSTOMER	sheet 1 of 1	

Tous droits strictement reserves. Reproduction ou communication a des tiers interdite sous quelque forme que ce soit sans autorisation ecrite du propietaire. Propriete de c FCI. Droits de reproduction FCI.

All rights strictly reserved. Reproduction or issue to third parties in any form whatever is not permitted without written authority from the proprietor. Property of FCI. Copyright FCI.