PART NAME	SERIES 30-2000 UPRIGHT CABINET RACK	PART No.	E30-2000 TO E30-2007	REV. DATE	1-2-02

FINISH:
FRAME ASSEMBLY, SIDES, DOOR & TOP COVER ____ GRAY TEXTURE OR ROYAL BLUE TEXTURE
PANEL MOUNTING RAILS ____ SMOOTH BLACK
FRONT TOP TRIM ____ METALLIC GRAY

MATERIAL:
PANEL MOUNTING RAILS ____ 12 GA. STEEL
FRAME TOP, BASE ASSEMBLY, FILLERS & VERTICAL RAILS ____ 14 GA. STEEL
RAIL SUPPORTS ____ 16 GA. STEEL
TOP COVER & SIDES ____ 18 GA. STEEL
DOOR & FRONT TOP TRIM ____ 20 GA. STEEL

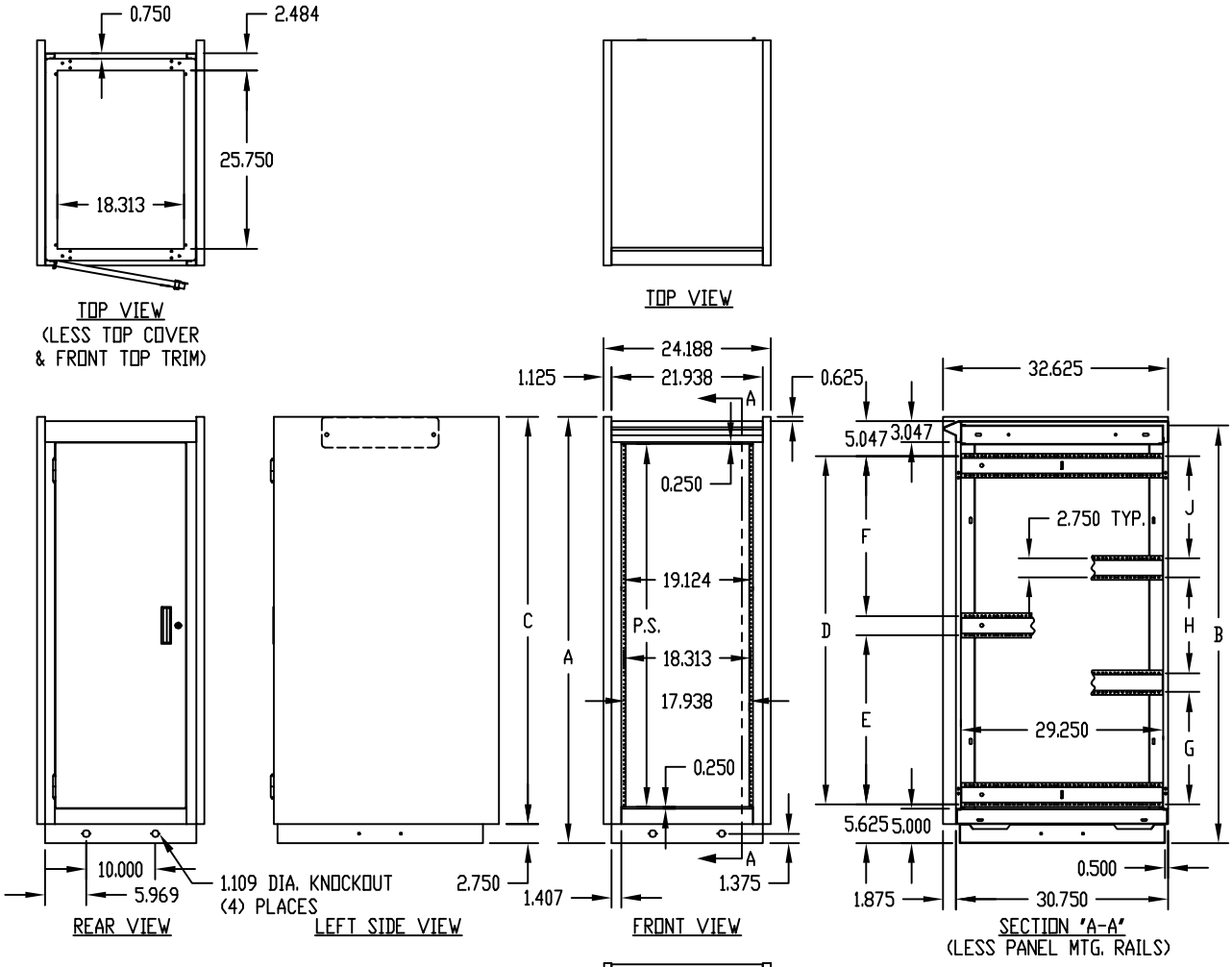

PANEL MOUNTING RAILS (FRONT & REAR) ARE TAPPED #10-32 ON E.I.A. UNIVERSAL SPACING AND ARE FULLY ADJUSTABLE.

BOTTOM PIERCED FOR MOUNTING RC-7758 CASTERS.

LOAD RATING: 1200 LBS. MAX.

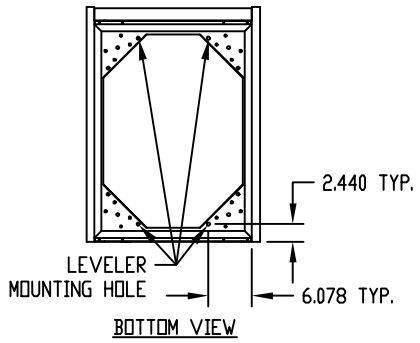

* DISCONTINUED

PART No.	P.S.	A	B	C	D	E	F	G	H	J
E30-2000	21.000	30.250	29.000	27.500	18.937	—	—	—	—	—
* E30-2001	31.500	40.750	39.500	38.000	29.437	—	—	—	—	—
* E30-2002	35.000	44.250	43.000	41.500	32.937	—	—	—	—	—
E30-2003	42.000	51.250	50.000	48.500	—	19.281	17.906	—	—	—
E30-2004	52.500	61.750	60.500	59.000	—	24.531	23.156	—	—	—
E30-2005	61.250	70.500	69.250	67.750	—	28.906	27.531	—	—	—
E30-2006	70.000	79.250	78.000	76.500	—	33.281	31.906	—	—	—
E30-2007	78.750	88.000	86.750	85.250	—	—	—	25.125	22.312	23.750