THIS COPY IS PROVIDED ON A RESTRICTED BASIS AND IS NOT TO BE USED IN ANY WAY DETRIMENTAL TO THE INTERESTS OF PANDUIT CORP.

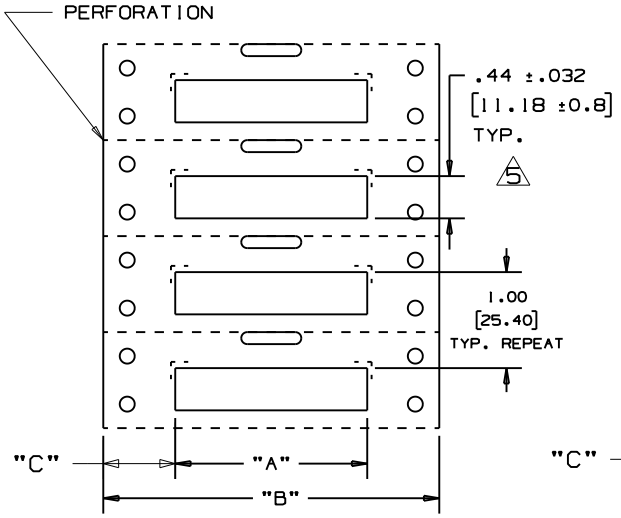

DETAIL A

5

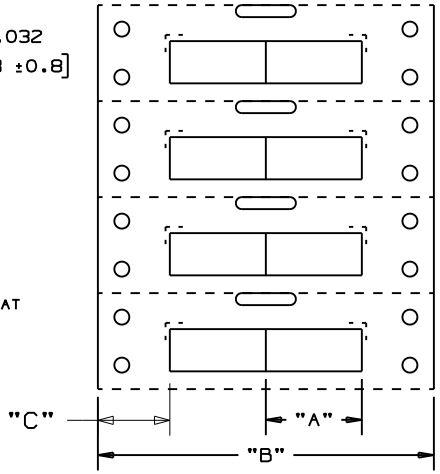

DETAIL B

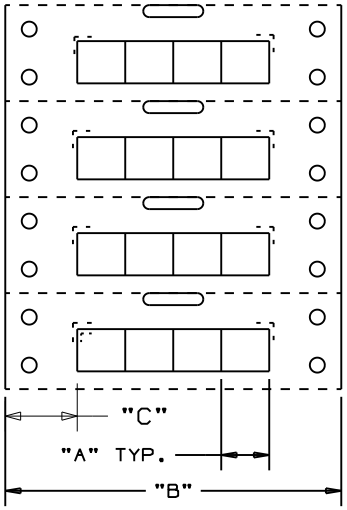

DETAIL C

STYLE A

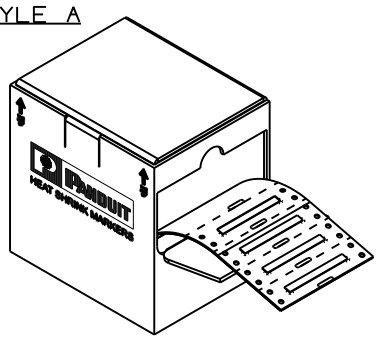

STYLE B

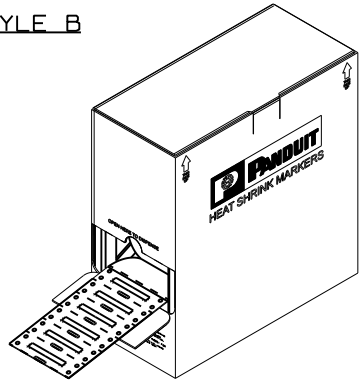

PART NUMBER	SEE DETAIL	"A" +/-.062	"B"	"C"	MARKER ACROSS	TUBING COLOR	SEE STYLE
H200X044F1T	A	2.00 [50.80]	3.50 [88.90]	.75 [19.1]	1	WHITE	A
H100X044F1T	B	1.00 [25.40]		.75 [19.1]	2	WHITE	
H050X044F1T	C	0.50 [12.70]		.75 [19.1]	4	WHITE	
H150X044F1T	A	1.50 [38.10]		1.00 [25.4]	1	WHITE	
H075X044F1T	B	0.75 [19.05]		1.00 [25.4]	2	WHITE	
H200X044F2T	A	2.00 [50.80]		.75 [19.1]	1	YELLOW	A
H100X044F2T	B	1.00 [25.40]		.75 [19.1]	2	YELLOW	
H050X044F2T	C	0.50 [12.70]		.75 [19.1]	4	YELLOW	
H200X044F1T-B	A	2.00 [50.80]		.75 [19.1]	1	WHITE	B
H100X044F1T-B	B	1.00 [25.40]		.75 [19.1]	2	WHITE	
H050X044F1T-B	C	0.50 [12.70]		.75 [19.1]	4	WHITE	
H150X044F1T-B	A	1.50 [38.10]		1.00 [25.4]	1	WHITE	
H075X044F1T-B	B	0.75 [19.05]		1.00 [25.4]	2	WHITE	

5 NOTES:
1. DIMENSIONS IN [ ] ARE IN MILLIMETERS.

REV	DATE	BY	CHK	DESCRIPTION	ECN - R	CUST	SUP
5	5/21/09	RVU		+/-.12, +/-.062, +/-.020 WAS +/-.03, +/-.032, +/-.010. HT: .44 +/-.032 WAS .440. MAT'L, HSK TUBING GMHS31, 3.5 WIDE LINER WAS GMHS. ADD "A" +/-.062. ADD STYLE B VIEW FOR BULK BOX. VIEW UPDATE.	5593 R		
4				VOID			
3	12/21/07	RVU		REVISED TUBING MATERIAL COLUMN WITH RAYCHEM AND SUMITOMO. ADDED H150X044F1T-B AND H075X044F1T-B.	5244 R		
2	12/4/07	RVU		(.XX)+/- .032 WAS (.XX)+/- .015.	5219 R		
1	1-31-07	RVU		REVISED VIEW OF BOX, & TOL. ADDED NOTES 1 & 2.	4859 R		
0	9-29-04	RVU		DRAWING RELEASE	0000 R		

CAD FILENAME/LAYERS: 100923NW_DC_C10221/01F

PANDUIT CORP. TINLEY PARK, ILLINOIS

CUSTOMER DRAWING H***X044F** OPTIMUM COMPUTER PRINTABLE HEAT SHRINK MARKERS

UNLESS OTHERWISE SPECIFIED, DIMENSIONAL TOLERANCES ARE: 5
(.X) ± .12 (.XXX) ± .020
(.XX) ± .062 ANGLES ±

UNLESS OTHERWISE SPECIFIED, ALL DIMENSIONS ARE GIVEN IN INCHES, THIRD ANGLE PROJECTION.

DRAWN BY: RVU
DATE: 9-29-04
CHK'D:

MAT'L: HEATSHRINK TUBING GMHS31, 3.5 WIDE LINER

SCALE: NTS
DRAWING NO.: C10221
DWG SIZE: A