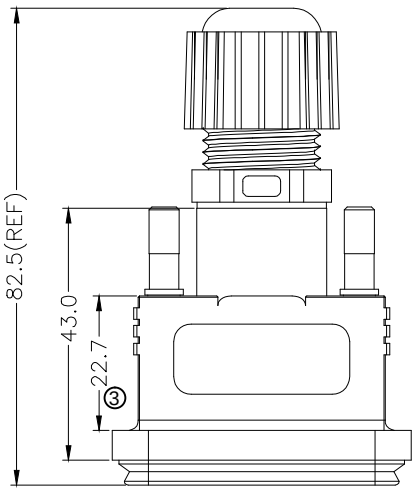

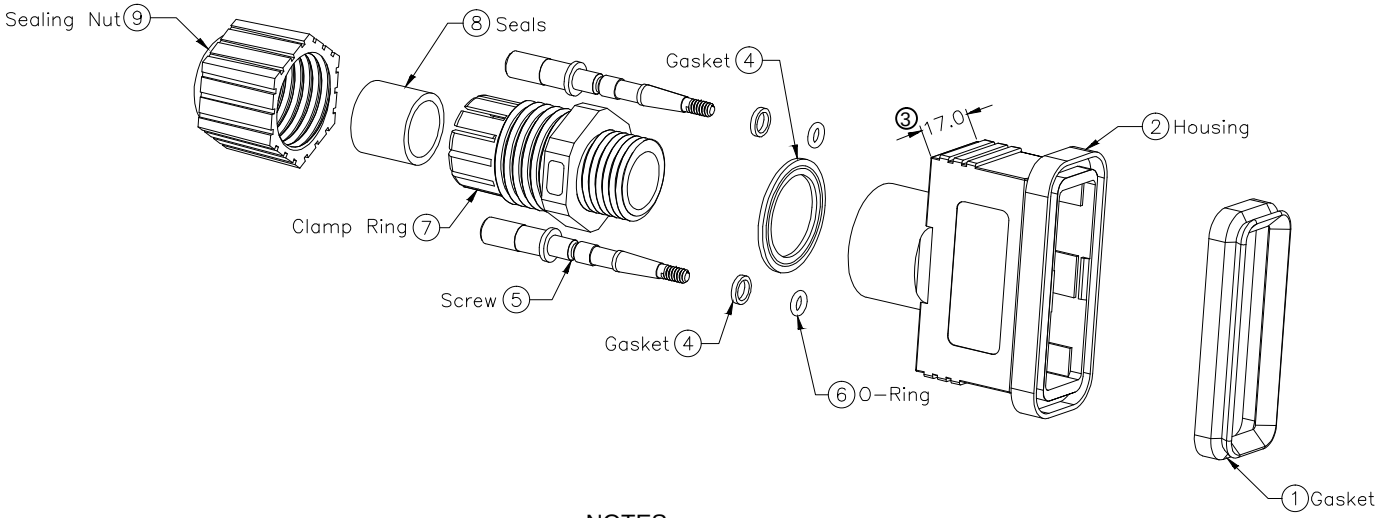

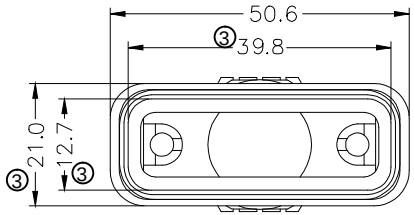

NOTES:
1. Waterproof rate: IP67
2. Gasket: EPDM Black UL94V-0 ④
3. Housing: ABS Black UL94V-0 ④
4. Screw 4#-40UNC: Brass ⑤
5. O-ring: Silicone Clear UL94V-0 ④
6. Body: Nylon Black UL94V-0 ④
7. Sealing Nut: Nylon Black UL94V-0 ④
8. Seals for Cable OD: ϕ6.0mm-ϕ10.0mm
9. One Set Unassembled in One Zipper Bag(#4)

RoHS compliant
Unit: mm

Scale	Free				Date	Name	Customer-No.
TOLERANCE		⑤	Add the thread specifications	18.04.2024	Peter	Drawn 08.01.2009	JACK
		④	Add notes	03.04.2018	Segal	Approved 18.04.2024	Peter
UNIT	±0.5	③	Correct dimensions	27.07.2017	Amy		ASSMANN WSW-No. A-HOOD-15/26
DIM	TOL	②	Modify drawing	25.12.2009	Dean		Drawing-No. ASS 3304 CO
		①	Drawn	08.01.2009	JACK		rev05
Angle	TOL	Id.	Modification	Date	Name		Replace / Sheet

ASSMANN WSW components
A company of BCS