THIS DRAWING IS UNPUBLISHED. RELEASED FOR PUBLICATION -,- .
© COPYRIGHT - BY TYCO ELECTRONICS CORPORATION. ALL INTERNATIONAL RIGHTS RESERVED.

LOC	DIST
AF	50

REVISIONS

P	LTR	DESCRIPTION	DATE	DWN	APVD
	J	REVISED PER ECR-10-006099	07JUL10	HMR	PD

1. CONTINUOUS STRIP ON REEL.

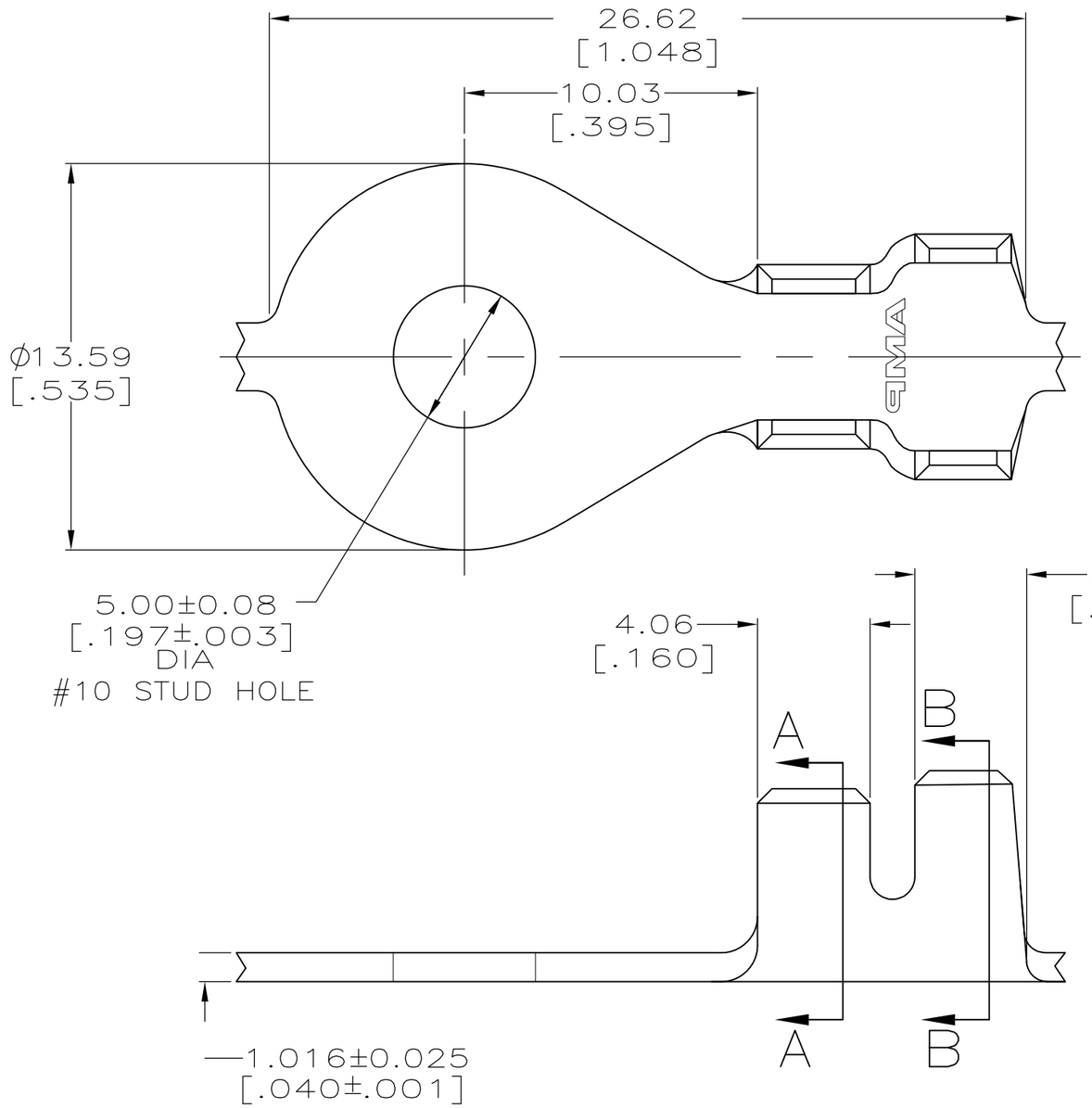

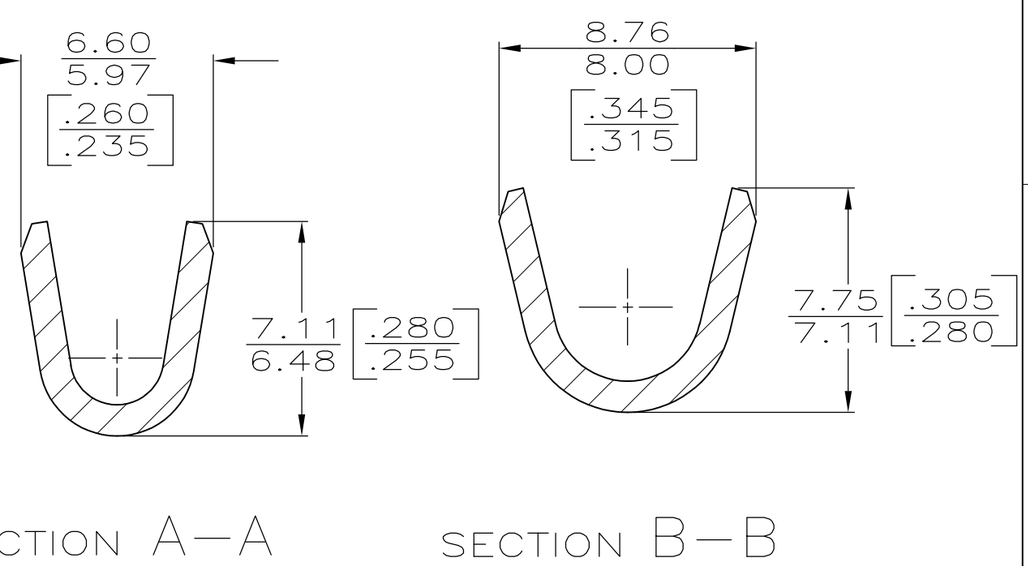

3.81–5.33 [.150–.210] DIA	12–10 AWG	60399–1
INSULATION RANGE	WIRE RANGE	PART NUMBER

THIS DRAWING IS A CONTROLLED DOCUMENT.

DIMENSIONS: mm [INCHES]

TOLERANCES UNLESS OTHERWISE SPECIFIED:

0 PLC	± –
1 PLC	± –
2 PLC	± 0.25 [.010]
3 PLC	± –
4 PLC	± –
ANGLES	± –

MATERIAL: H00 COPPER

FINISH: TIN

DWN PHILLIP M FORTNEY 28SEP98
CHK MICHAIL S FEHER 28SEP98
APVD JEREMY DUNCAN 28SEP98
PRODUCT SPEC —
APPLICATION SPEC 114–2084
WEIGHT —

Tyco Electronics
Tyco Electronics Corporation
Harrisburg, PA 17105–3608

NAME: TERMINAL,RING

SIZE	CAGE CODE	DRAWING NO	RESTRICTED TO
A3	00779	C-60399	—

CUSTOMER DRAWING | SCALE 5:1 | SHEET 1 OF 1 | REV J