Laser diode
L8347/L7892 series

Pigtail type, 1.3 µm, 1.25, 2.5 Gbps

L8347 and L7892 series are high-speed infrared emitter devices specifically developed for 1.3 µm band optical fiber communications. These devices incorporate a high-speed Fabry-Perot laser diode integrated in a pig-tail module. Packages are available with various connectors and mounting styles.

Features

- High-speed Fabry-Perot laser diode
  L8347 series: 1.25 Gbps
  L7892 series: 2.5 Gbps
- Compatible with single-mode optical fiber

Applications

- Optical fiber communications
- Fiber channel
- Gigabit ethernet
- HDTV
- SDH

■ Absolute maximum ratings (Ta=25 °C)

Parameter	Symbol	L8347 series	L7892 series	Unit
Forward current	I_F	Ith + 14 (DC)	Ith + 16 (DC)	mA
		Ith + 28 (pulse) *	Ith + 32 (pulse) *	mA
Reverse voltage (laserdiode)	V_R	2		V
Reverse voltage (photodiode)	V_{Rm}	20		V
Operating temperature	Topr	-20 to +70		°C
Storage temperature	Tstg	-40 to +70		°C

* Duty ratio: 50 %

■ Electrical and optical characteristics (Typ. Ta=25 °C, I_F=Ith +10 mA)

Parameter	Symbol	L8347 series	L7892 series	Unit
Peak wavelength	λp	1.31	1.31	µm
Forward voltage	V_F	1.1	1.1	V
Threshold current	Ith	6	9	mA
Fiber end output	P_F	0.1	0.3	mW
Rise time	tr	250	200	ps
Data rate	B	1.25	2.5	Gbps
Monitor current (photodiode)	Im	0.4	0.5	mA

■ Package lineup

Configuration		L8347/L7892					
		-11	-12	-21	-22	-31	-32
Module	Mounting style	Coaxial		Board		Panel	
	Dimensional outline	①		②		③	
Fiber	Type	SM (9.5/125) ϕ0.9					
	Length	1 m +20 cm/-0 cm					
Connector	Type	SC	FC	SC	FC	SC	FC
	Dimensional outline	④	⑤	④	⑤	④	⑤

SOLID STATE DIVISION

■ Dimensional outline (unit: mm, tolerance unless otherwise noted: ±0.2)

Mounting type

① Coaxial

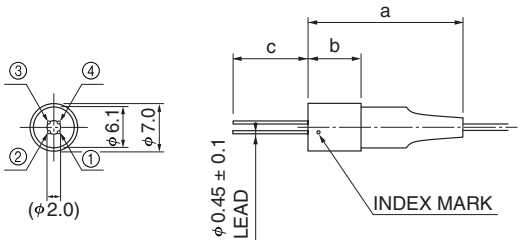

	L8347-11/-12	L7892-11/-12
a	(24.1)	(22.8)
b	9.1	7.8
c	(16)	(10)

KLEDA0049EA

② Board

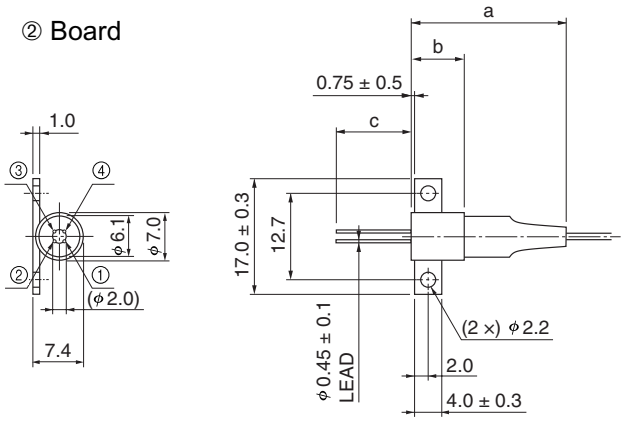

	L8347-21/-22	L7892-21/-22
a	(24.1)	(22.8)
b	9.1	7.8
c	(16)	(10)

KLEDA0050EA

③ Panel

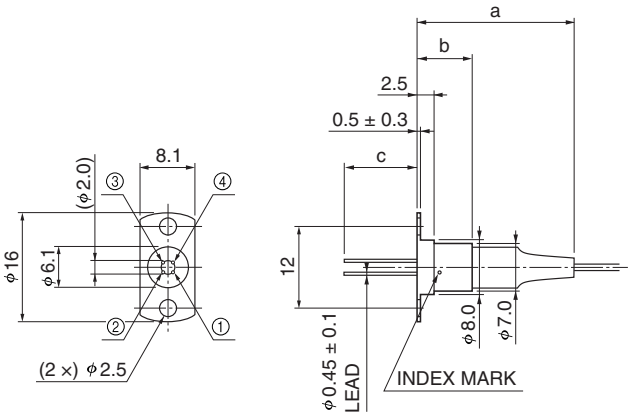

	L8347-31/-32	L7892-31/-32
a	(24.4)	(23.1)
b	9.4 ± 0.3	8.1 ± 0.3
c	(16)	(10)

KLEDA0051EA

■ Pin connection

Pin No.	L8347 series	L7892 series
①	Anode (PD)	Cathode (PD)
②	Anode (LD)	Cathode (LD)
③	Cathode (LD)	Anode (LD)
④	Cathode (PD)	Anode (PD)

Connector

④ SC

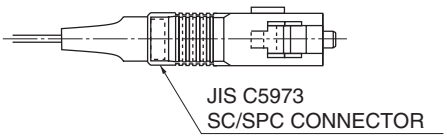

KIRDA0102EA

⑤ FC

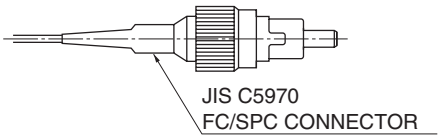

KIRDA0103EA

HAMAMATSU
Information furnished by HAMAMATSU is believed to be reliable. However, no responsibility is assumed for possible inaccuracies or omissions.
Specifications are subject to change without notice. No patent rights are granted to any of the circuits described herein. ©2001 Hamamatsu Photonics K.K.

HAMAMATSU PHOTONICS K.K., Solid State Division
1126-1 Ichino-cho, Hamamatsu City, 435-8558 Japan, Telephone: (81) 053-434-3311, Fax: (81) 053-434-5184, http://www.hamamatsu.com
U.S.A.: Hamamatsu Corporation: 360 Foothill Road, P.O.Box 6910, Bridgewater, N.J. 08807-0910, U.S.A., Telephone: (1) 908-231-0960, Fax: (1) 908-231-1218
Germany: Hamamatsu Photonics Deutschland GmbH: Arzbergerstr. 10, D-82211 Herrsching am Ammersee, Germany, Telephone: (49) 08152-3750, Fax: (49) 08152-2658
France: Hamamatsu Photonics France S.A.R.L.: 8, Rue du Saule Trapu, Parc du Moulin de Massy, 91882 Massy Cedex, France, Telephone: 33-(1) 69 53 71 00, Fax: 33-(1) 69 53 71 10
United Kingdom: Hamamatsu Photonics UK Limited: 2 Howard Court, 10 Tewin Road, Welwyn Garden City, Hertfordshire AL7 1BW, United Kingdom, Telephone: (44) 1707-294888, Fax: (44) 1707-325777
North Europe: Hamamatsu Photonics Norden AB: Smidesvägen 12, SE-171 41 Solna, Sweden, Telephone: (46) 8-509-031-00, Fax: (46) 8-509-031-01
Italy: Hamamatsu Photonics Italia S.R.L.: Strada della Moia, 1/E, 20020 Arese, (Milano), Italy, Telephone: (39) 02-935-81-733, Fax: (39) 02-935-81-741

Cat. No. KLED1019E02
Jan. 2001 DN