THIS DRAWING IS UNPUBLISHED. RELEASED FOR PUBLICATION -.- .
© COPYRIGHT 2005 BY TYCO ELECTRONICS CORPORATION. ALL RIGHTS RESERVED.

LOC	DIST
GP	00

REVISIONS

P	LTR	DESCRIPTION	DATE	DWN	APVD
	A	REL PER EC 0S13-0043-05	03OCT05	BL	JG

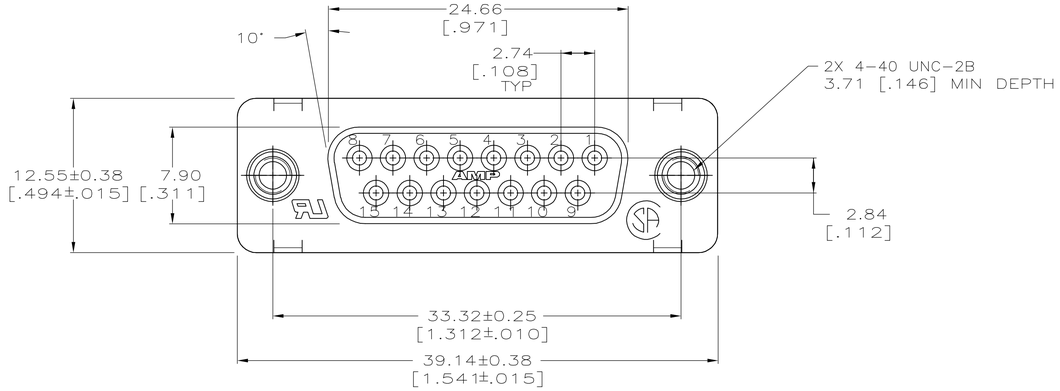

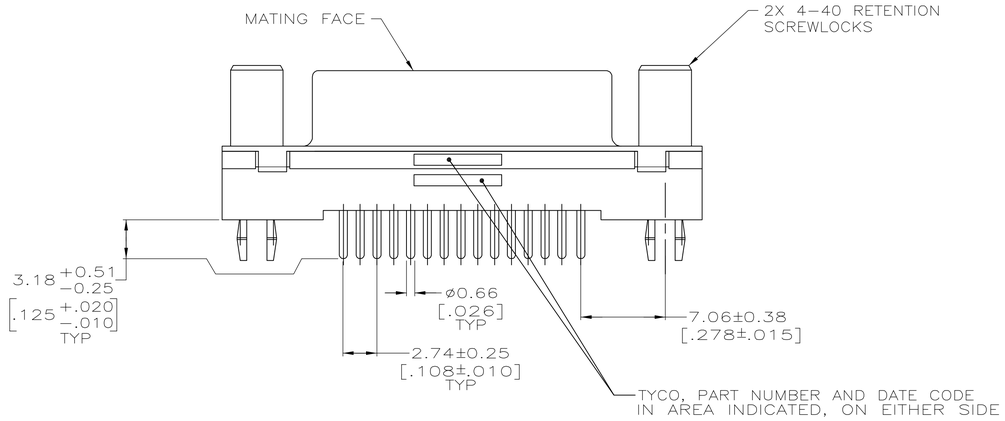

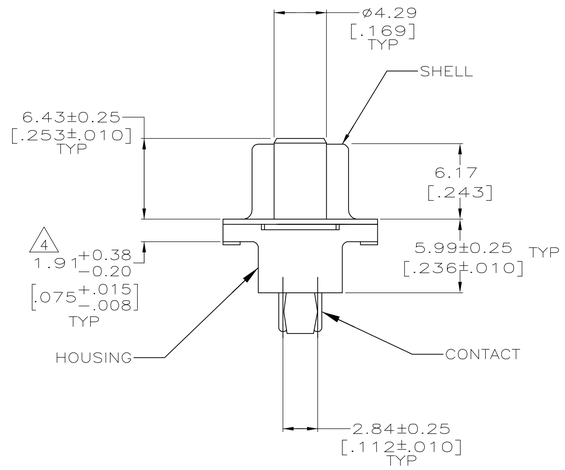

1. HOUSING: POLYESTER, UL 94V-0 RATED, BLACK.
   CONTACTS: PHOSPHOR BRONZE
   RETENTION SCREWLOCKS: BRASS
   SHELL: CARBON STEEL
2. SHELL: 5.08µm[.000200] MIN TIN OVER 2.54µm[.000100] MIN COPPER.
   CONTACTS: 0.76µm[.000030] MIN GOLD FOR A LENGTH OF 1.40[.055] MIN FROM MATING END, 2.54µm[.000100] MIN TIN ON OPPOSITE END, BOTH OVER 1.27µm[.000030] MIN NICKEL OVER COPPER FLASH.
   RETENTION SCREWLOCKS: 2.54µm[.000100] MIN TIN OVER 1.27µm[.000050] MIN NICKEL OVER COPPER FLASH.
3. DATUMS AND BASIC DIMENSIONS ESTABLISHED ESTABLISHED BY CUSTOMER.
4. 2.79[.110] MAX IN SHELL TAB CLINCH AREAS.

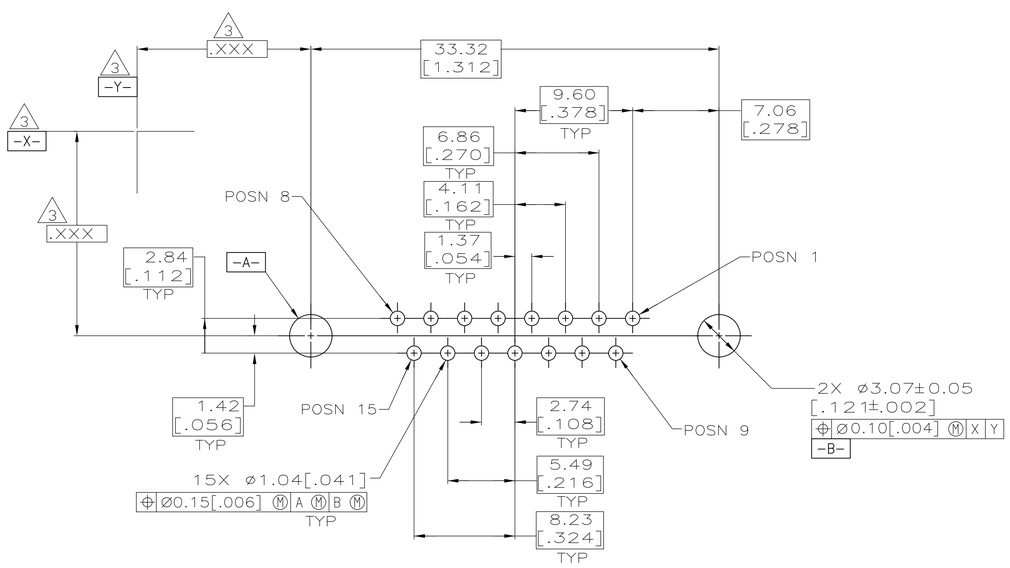

RECOMMENDED PC BOARD MOUNTING DIMENSIONS
1.57[.062] PC BOARD THICKNESS

5787683-1

PART NUMBER

THIS DRAWING IS A CONTROLLED DOCUMENT.

DIMENSIONS: mm[INCHES]

TOLERANCES UNLESS OTHERWISE SPECIFIED:
0 PLC ± –
1 PLC ± –
2 PLC ± 0.13 [.005]
3 PLC ± –
4 PLC ± –
ANGLES ± 2°

MATERIAL 1

FINISH 2

DWN B. LATTUCA 03OCT05
CHK S. BOLASH 03OCT05
APVD M. WALMSLEY 03OCT05

PRODUCT SPEC 108-40025
APPLICATION SPEC 114-40023
WEIGHT –

tyco Electronics
Tyco Electronics Corporation
Harrisburg, PA 17105-3608

NAME
RECEPTACLE ASSEMBLY, SIZE 2,
15 POSITION, FRONT METAL SHELL,
RETENTION SCREWLOCKS, AMPLIMITE HD-20

SIZE	CAGE CODE	DRAWING NO	RESTRICTED TO
A1	00779	C-5787683	–

CUSTOMER DRAWING | SCALE 4:1 | SHEET 1 OF 1 | REV A