THIS DRAWING IS UNPUBLISHED. RELEASED FOR PUBLICATION - ,- .
© COPYRIGHT - By - ALL RIGHTS RESERVED.

LOC	DIST
GP	00

REVISIONS

P	LTR	DESCRIPTION	DATE	DWN	APVD
	P	REVISED PER ECO-11-005033	23MAR11	RK	HMR

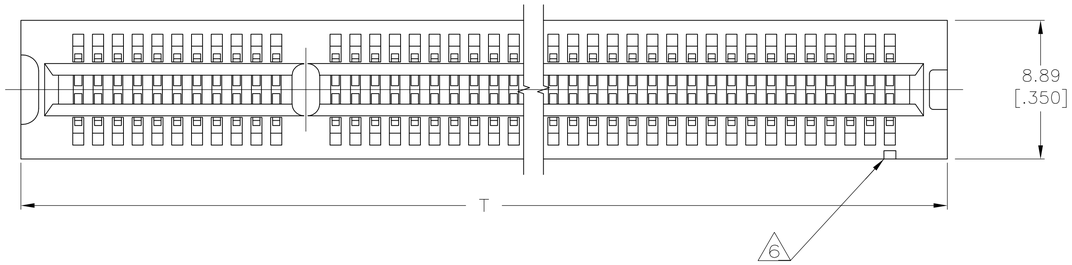

1. HOUSING: HIGH TEMPERATURE THERMOPLASTIC. COLOR: BROWN.
2. CONTACT: PHOSPHOR BRONZE.
3. CONTACT FINISH: .000100 MIN NICKEL ALL OVER.
   .000030 MIN GOLD OVER NICKEL IN CONTACT AREA.
   .000100 MIN MATTE TIN OVER NICKEL ON SOLDER TAILS.
4. DISTANCE FROM CONTACT POINT TO BOTTOM OF CARD SLOT.
5. AMP PART NUMBER, DATE CODE AND CSA LOGO MARKED IN APPROXIMATE AREA SHOWN.
6. PIN ONE IDENTIFIER NOTCH ONLY ON PART NUMBERS INDICATED.
7. OBSOLETE PARTS: OBSOLETE CIS STREAMLINING PER D.RENAUD/D.SINISI

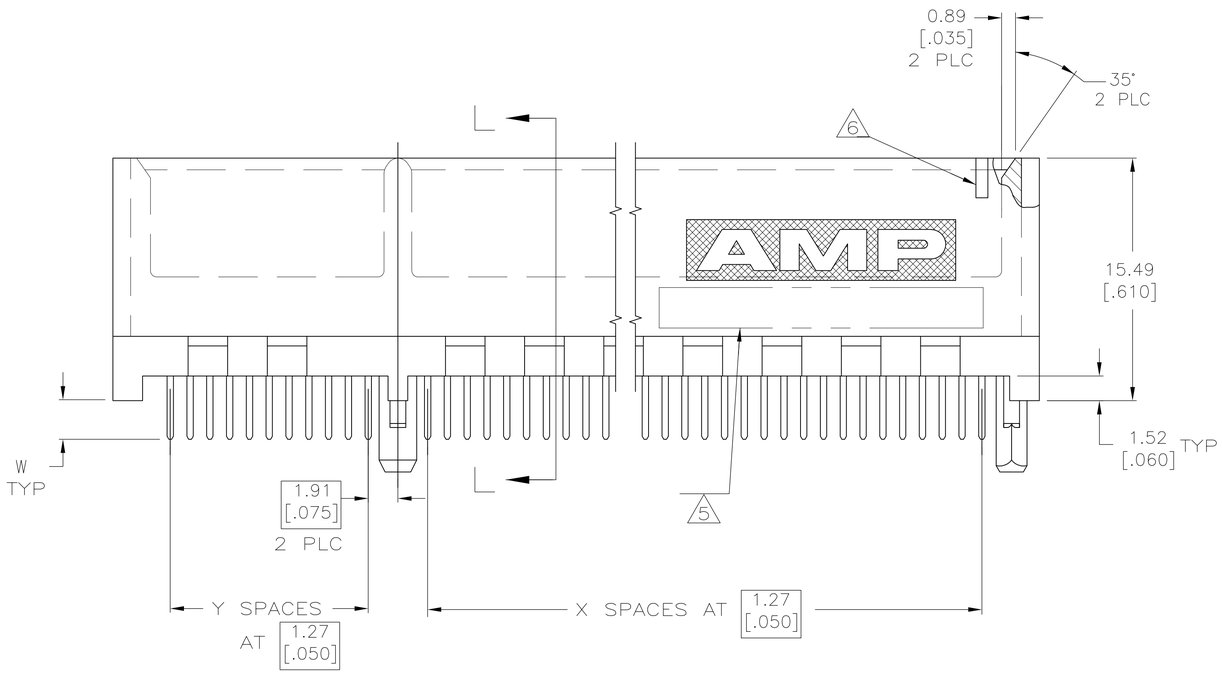

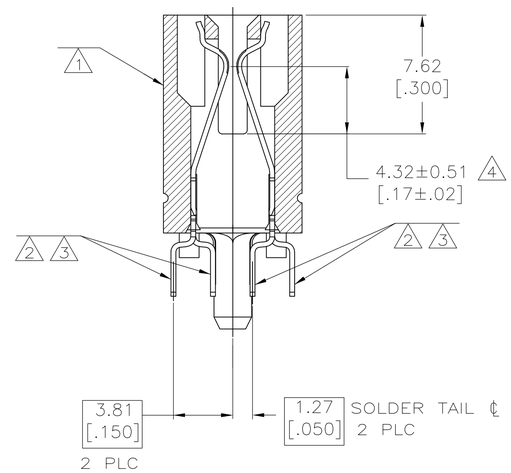

SECTION L—L
SCALE 8:1

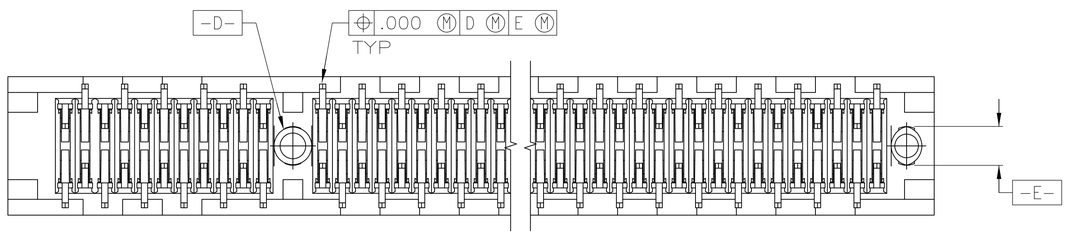

SEE SHEET 2 FOR HOLE PATTERNS

	W	PIN ONE IDENTIFIER	HOLE PATTERN	V	U	T	S	Y	X	NO OF DUAL POSN	PART NUMBER
7 OBSOLETE	3.18 [.125]	NO	B	45.72 [1.800]	44.70 [1.760]	65.79 [2.59]	15.49 [.610]	10	33	45	~~1-5650090-4~~
	3.56 [.140]	NO	A	26.67 [1.050]	25.65 [1.010]	46.74 [1.84]	15.49 [.610]	10	18	30	1-5650090-2
7 OBSOLETE	3.56 [.140]	NO	C	55.88 [2.200]	54.86 [2.160]	110.24 [4.34]	49.78 [1.960]	37	41	80	~~1-5650090-1~~
	2.54 [.100]	NO	C	55.88 [2.200]	54.86 [2.160]	110.24 [4.34]	49.78 [1.960]	37	41	80	5650090-9
	2.54 [.100]	NO	B	17.78 [.700]	16.76 [.660]	37.85 [1.49]	15.49 [.610]	10	11	23	5650090-7
	2.54 [.100]	NO	A	26.67 [1.050]	25.65 [1.010]	46.74 [1.84]	15.49 [.610]	10	18	30	5650090-6
	2.54 [.100]	NO	A	39.37 [1.550]	38.35 [1.510]	59.44 [2.34]	15.49 [.610]	10	28	40	5650090-3
	2.54 [.100]	NO	B	45.72 [1.800]	44.70 [1.760]	65.79 [2.59]	15.49 [.610]	10	33	45	5650090-2
	2.54 [.100]	YES	A	59.69 [2.350]	58.67 [2.310]	79.76 [3.14]	15.49 [.610]	10	44	56	5650090-1

THIS DRAWING IS A CONTROLLED DOCUMENT.

DWN AL FRANTUM 24 JAN 05
CHK AL FRANTUM 24 JAN 05
APVD

DIMENSIONS: mm

TOLERANCES UNLESS OTHERWISE SPECIFIED:
0 PLC ± –
1 PLC ± –
2 PLC ± 0.25 [.010]
3 PLC ± 0.12 [.005]
4 PLC ± –
ANGLES ± 2°

MATERIAL 1 2
FINISH 1 3

PRODUCT SPEC 108-14034
APPLICATION SPEC 114-26012
WEIGHT –

TE Connectivity

NAME CONNECTOR ASSEMBLY, DUAL POSITION, .050 SERIES

SIZE	CAGE CODE	DRAWING NO	RESTRICTED TO
A1	00779	C-5650090	–

CUSTOMER DRAWING SCALE 5:1 SHEET 1 OF 2 REV P

THIS DRAWING IS UNPUBLISHED. RELEASED FOR PUBLICATION -,- .
© COPYRIGHT - By - ALL RIGHTS RESERVED.

LOC	DIST
GP	00

REVISIONS

P	LTR	DESCRIPTION	DATE	DWN	APVD
	-	SEE SHEET 1	-	-	-

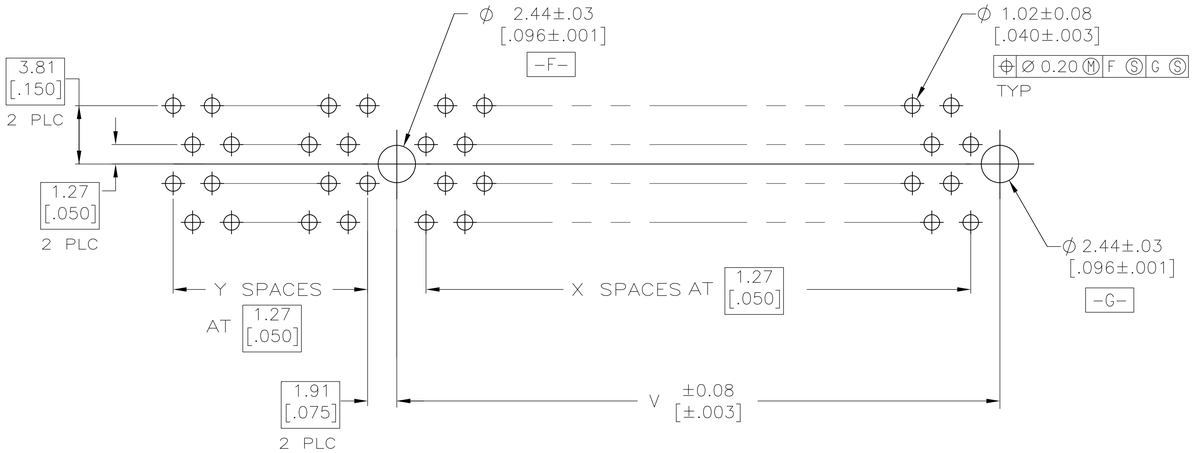

RECOMMENDED CONNECTOR MOUNTING HOLE PATTERN A
(CONNECTOR SIDE SHOWN)

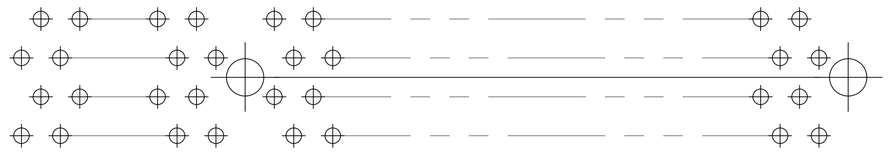

RECOMMENDED CONNECTOR MOUNTING HOLE PATTERN B
(CONNECTOR SIDE SHOWN)

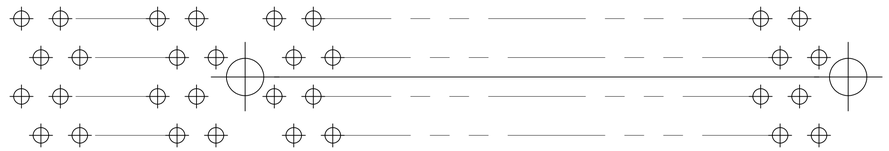

RECOMMENDED CONNECTOR MOUNTING HOLE PATTERN C

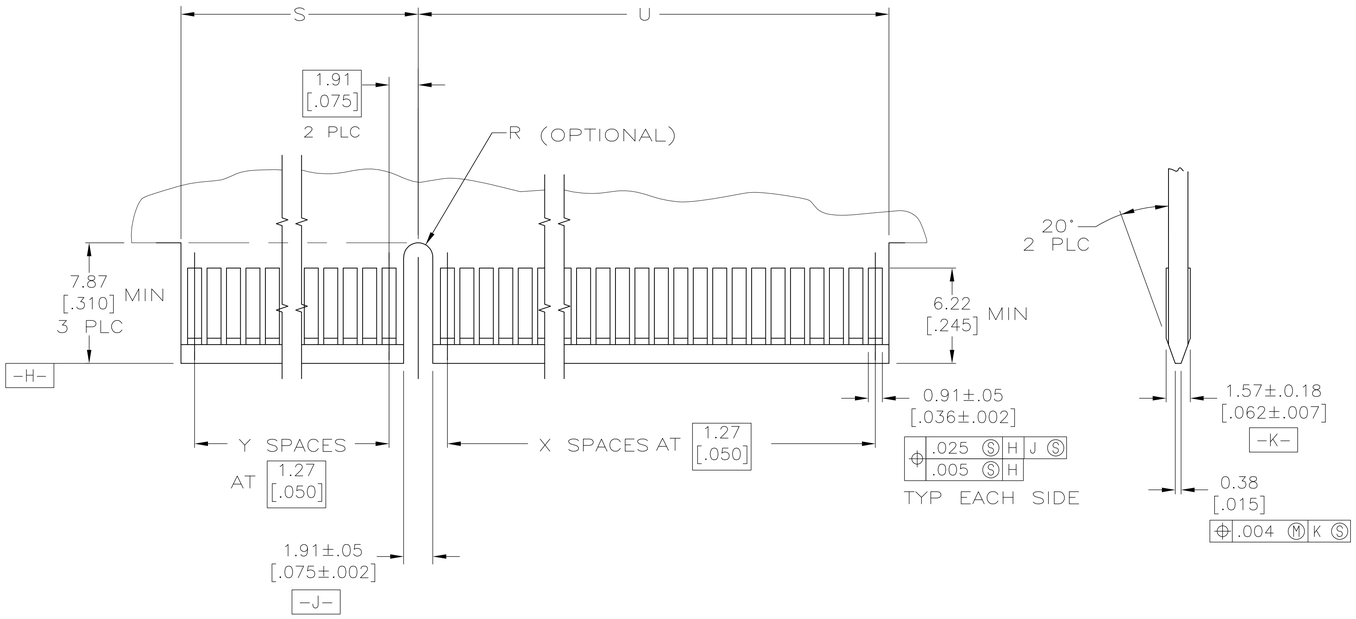

RECOMMENDED MATING BOARD EDGE CONFIGURATION
(CONNECTOR SIDE SHOWN)

THIS DRAWING IS A CONTROLLED DOCUMENT.		DWN AL FRANTUM 24 JAN 05	TE Connectivity
DIMENSIONS: mm	TOLERANCES UNLESS OTHERWISE SPECIFIED: 0 PLC ± - 1 PLC ± - 2 PLC ± - 3 PLC ± - 4 PLC ± - ANGLES ± 2°	CHK AL FRANTUM 24 JAN 05	NAME CONNECTOR ASSEMBLY, DUAL POSITION, .050 SEERIES
		APVD	
		PRODUCT SPEC 108-14034	
		APPLICATION SPEC 114-26012	SIZE A1 · CAGE CODE 00779 · DRAWING NO C-5650090 · RESTRICTED TO —
MATERIAL SEE SHEET 1	FINISH SEE SHEET 1	WEIGHT —	
		CUSTOMER DRAWING	SCALE 5:1 · SHEET 2 OF 2 · REV P

4805 (3/11)