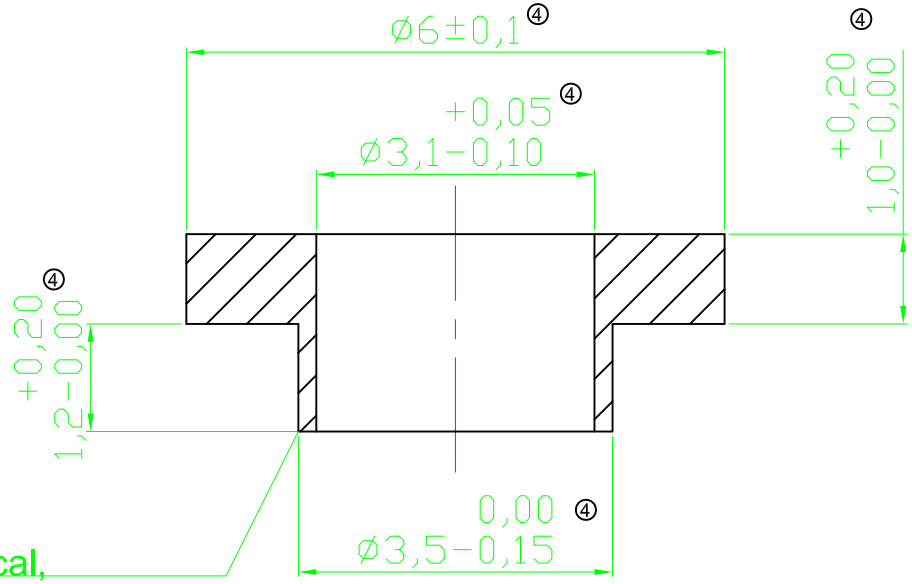

burr at dimension 1,2mm is uncritical,
no influence

Notes
Material:SR25
Dielectric strength: 380kV/cm
Heat resistance:215°C
Tensile strength: 80N/mm

RoHS compliant
unit:mm

					Date	Name
				Drawn	23.06.2005	Storb
④	Add. tolerance	28.02.2012	N.Schulz	Approved	28.02.2012	Andy
③	Modify drawing layout	10.03.2010	Dean			
②	Update	20.08.2009	Dean			
①	Drawn	23.06.2005	Storb			
Id.	Modification	Date	Name			

ASSMANN WSW components

Customer-No.

ASSMANN WSW-No. V5359

Drawing-No. ASS 0416 HS

rev04

Replace

Sheet