REVISIONS			
REV	DESCRIPTION	DATE	APPROVED
01_1	REVISED	KYLE 10-22-97	10/27/97

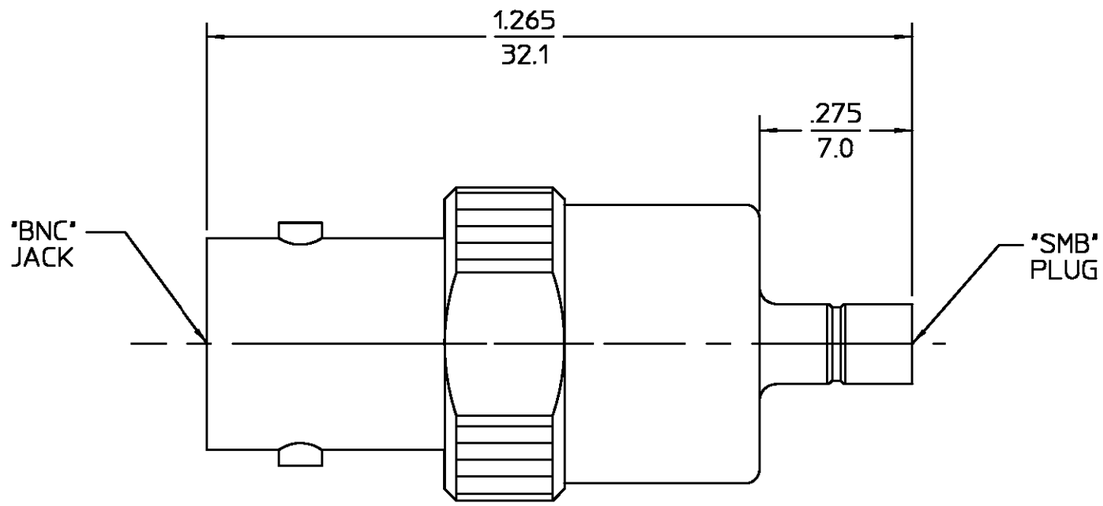

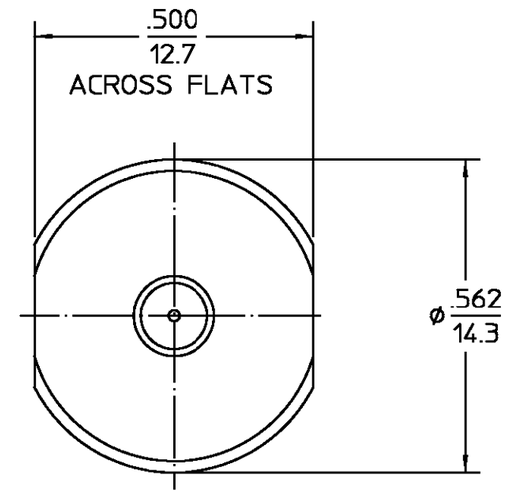

COMPONENT	MATERIAL	FINISH
HOUSING (BNC)	BRASS PER ASTM-B-16, HALF HARD	NICKEL PLATE PER QQ-N-290
HOUSING (SMB)	STAINLESS STEEL PER ASTM-A484 AND ASTM-A582, TYPE 303	PASSIVATE PER QQ-P-35
DIELECTRIC	PTFE FLUOROCARBON PER ASTM-D-1457	N/A
CENTER CONTACT	BERYLLIUM COPPER PER ASTM-B-196 OR ASTM-B-197, ALLOY C17300, CONDITION H	GOLD PLATE PER MIL-G-45204

UNLESS OTHERWISE SPECIFIED DIMENSIONS ARE IN INCHES

FRAC.	DEC.	ANGLES
± 1/64	±.005	± 1°

		DATE
DRAWN BY	BC	5-13-77
CHECKED BY	KWW	6-14-77
APP'D BY	RMF	6-15-77

AMP

AMP Incorporated
140 Fourth Avenue
Waltham, MA 02451-7599

These drawings and specifications are the property of M/A COM Interconnect Div. and shall not be reproduced or copied or used in whole or in part as the basis for the manufacture or sale o f item(s) without written permission.

USE ASS'Y PROCEDURE

NO. A.P. N/A

TITLE "SMB" JACK TO "BNC" JACK ADAPTER

SIZE	CODE IDENT NO.		REV
B	26805	3280-2224-00	01_1
SCALE 4:1			SHEET 1 OF 1

.XXX = in
XX.X = mm (REF)

COPY IN PUERTO RICO

CUSTOMER DRAWING

AMP PART # 1058056-1
SHEET 1 OF 1 REV A