REV.	MODIFICATION.	DATE	DRN
01	Production Release	20/06/07	TC
02	ECN2007-115	17/07/07	TC
03	ECN2007-122	06/08/07	TC
04	ECN2007-138	21/08/07	TC

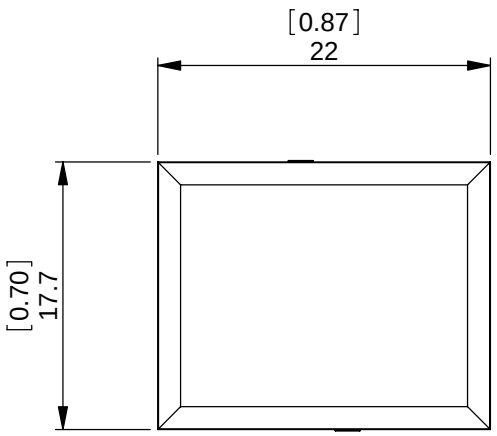

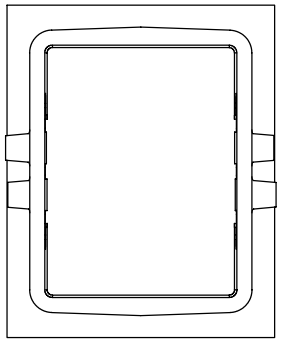

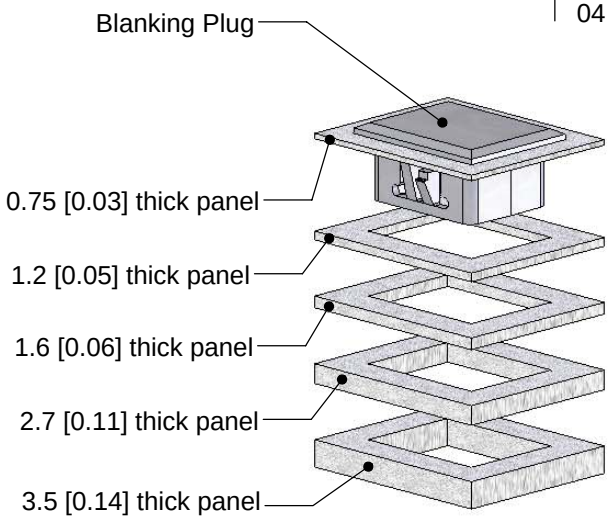

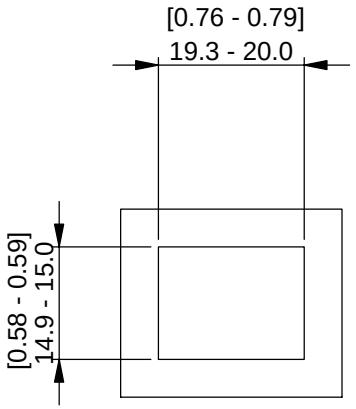

PANEL DETAILS.

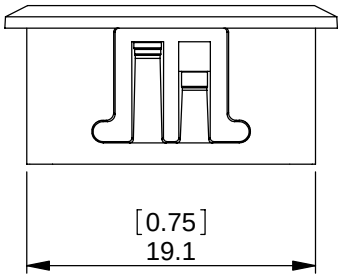

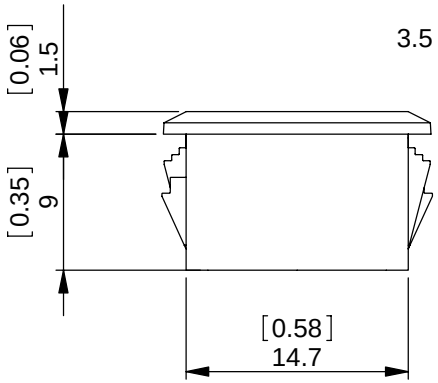

NOTES:

- To fit panel hole size and thickness range as shown above
- Available in Grey as standard
- Available in Black by special order. Order code 'BPE-RJ45-01BK'
- Available in White by special order. Order code 'BPE-RJ45-01WH'

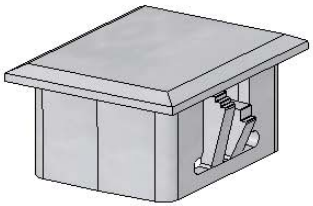

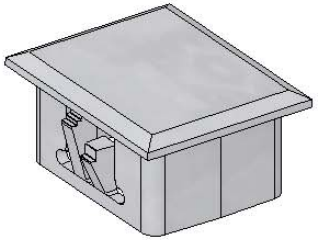

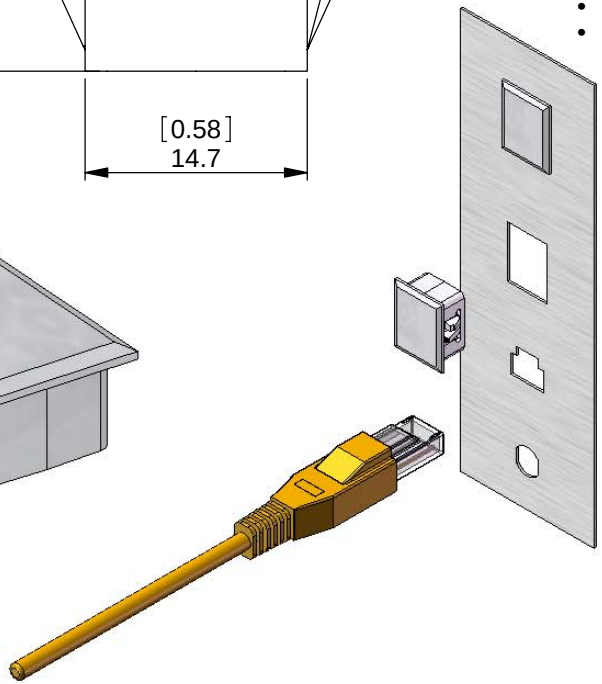

INFORMATION CONTAINED IN THIS DOCUMENT IS CONFIDENTIAL TO RICHCO INTERNATIONAL Co. Ltd. AND MAY NOT BE DISCLOSED OR REPRODUCED IN WHOLE OR PART WITHOUT THEIR WRITTEN CONSENT.

Richco®

ALL DIMENSIONS IN mm
GENERAL TOLERANCES ±0.25
UNLESS OTHERWISE STATED
1 DECIMAL PLACE ±0.25
2 DECIMAL PLACES ± 0.10
ANGULAR ±1°

THIRD ANGLE

MATERIAL: Nylon 6/6 UL 94 V2 (RMS-01)				COLOUR: Dolphin Grey (GY)	
DESCRIPTION: Blanking Plug for RJ-45 Connectors				PART No: BPE-RJ45-01GY	
DRG No: 07-055		NPR No: 2006-275		Mass:(g) 1.5	SHEET SIZE A4
DRN NJB	DATE 27/09/06	CHKD TC	DATE 21/12/06	SCALE NTS	SHEET No. 1 OF 2

FORM No. 0145/02