## Bottom View of Assembly

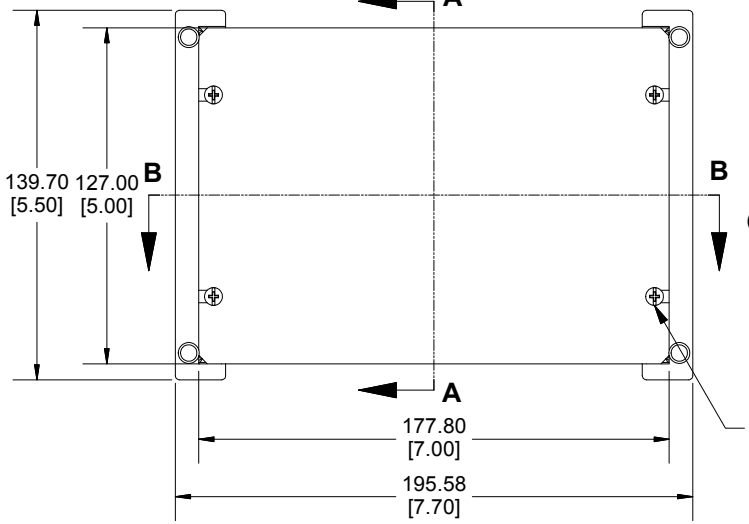


## SECTION A-A
## End View of Assembly

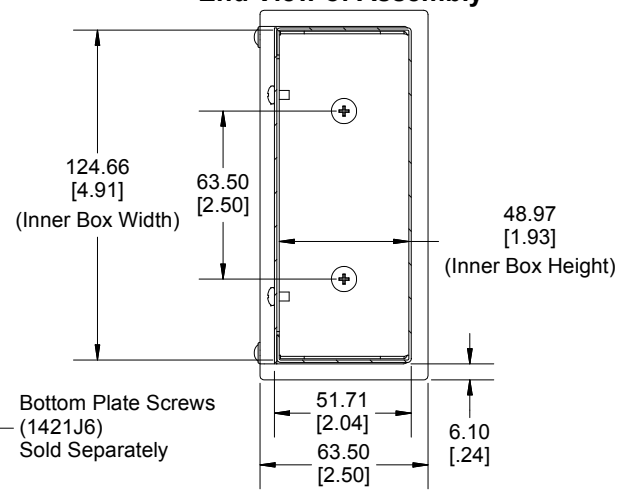


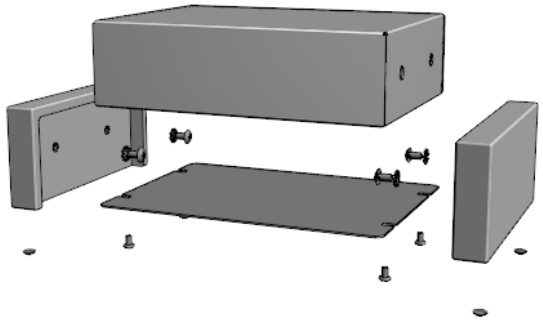

## SECTION B-B
## Side View of Assembly

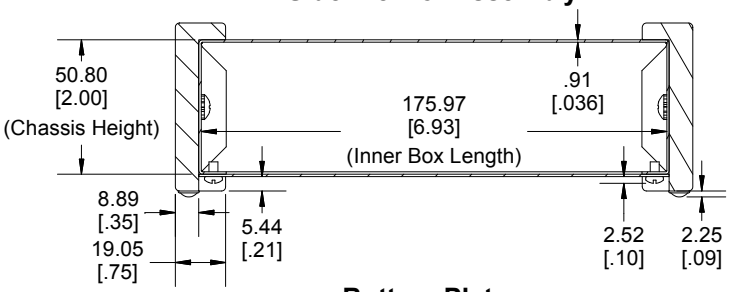


## Bottom View of Chassis Assembly
## (Sold Separately)

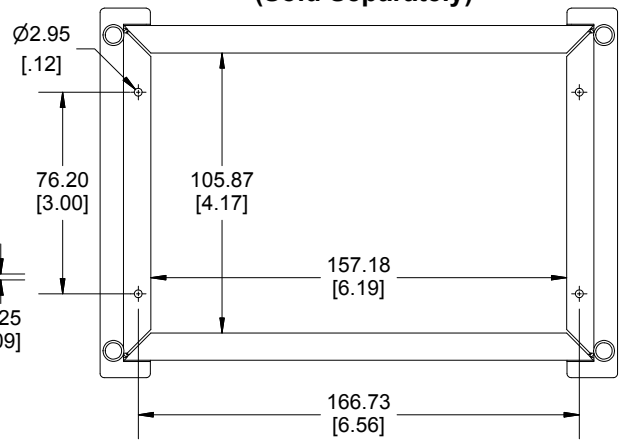


## Bottom Plate
## (Sold Separately)

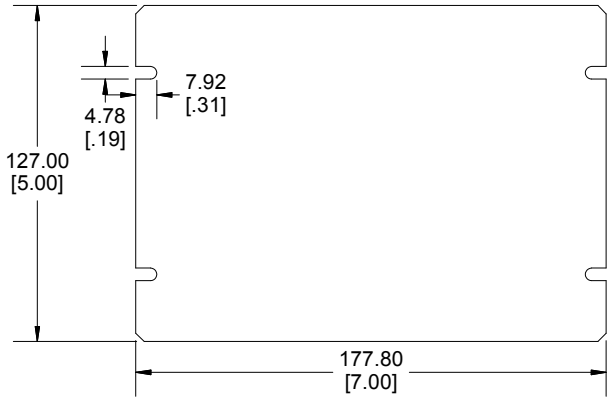


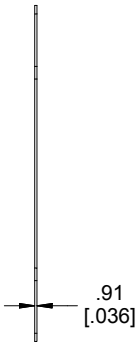


Enclosures can be Factory Modified ( Milling, Drilling, Printing etc.)
Contact Factory mjm@hammondmfg.com for quotes
Solid models of this enclosure available in STEP or IGES.

| NOTE |
|---|
| Chassis Includes Wooden Sides, Adhesive Rubber Feet and Required Hardware<br>Chassis is Made of 0.036" Steel.<br>Bottom Plate is Made of 0.036" Steel. (Sold Separately) |
| **Screws should not be torqued past 4.43 lbf.in ( 50 cN.m)** |

| PART NUMBERS | |
|---|---|
| **1441-12BK3CWW Enclosure** | |
| **Satin Black Chassis** | 1441-12BK3CWW |
| **ACCESSORIES** | |
| **Satin Black Bottom Plate** | 1431-12BK3 |
| **Black Cover Screws (Pkg 6)**<br>**[6-32 x 1/4" Self-Tapping Screws]** | 1421J6BK |
| **Clear Self-Adhesive Rubber Feet (Pkg 24)** | 1421T6CL |

**Dimensions:**
mm
[inches]

HAMMOND MANUFACTURING™

# 1441-12CWW

www.hammondmfg.com