THIS DRAWING IS UNPUBLISHED. RELEASED FOR PUBLICATION - , - .
© COPYRIGHT - By - ALL RIGHTS RESERVED.

LOC	DIST
—	—

REVISIONS

P	LTR	DESCRIPTION	DATE	DWN	APVD
	S	REV PER ECO 13-009679	6-13-13	CT	DM

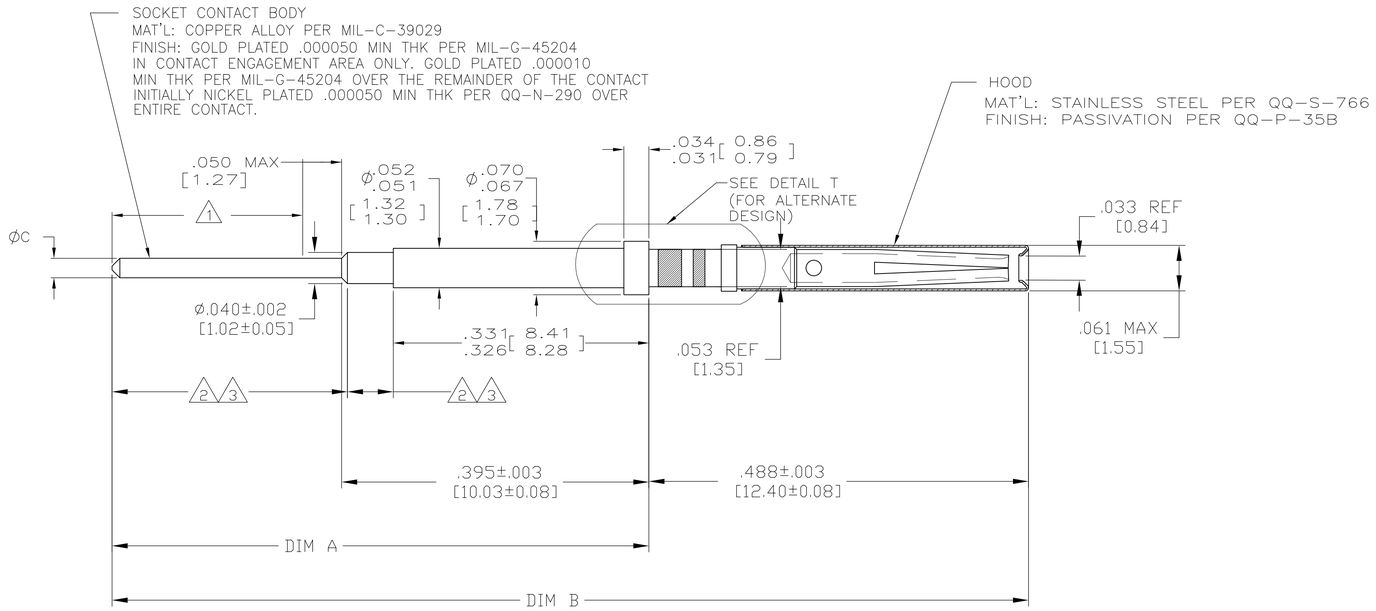

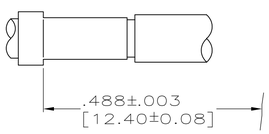

DETAIL T
ALTERNATE DESIGN

REMARKS	MIN EXTENSION BEYOND INSERT	DIM C	DIM B	DIM A	PART NUMBER
2	.292 [7.42]	.024-.026 [0.61-0.66]	1.216 [30.89]	.718 [18.24]	2-211431-1
	.292 [7.42]	.024-.026 [0.61-0.66]	1.216 [30.89]	.718 [18.24]	2-211431-0
3	.375 [9.53]	.024-.026 [0.61-0.66]	1.299 [32.99]	.801 [20.35]	1-211431-9
	.330 [8.38]	.024-.026 [0.61-0.66]	1.244 [31.59]	.756 [19.20]	1-211431-8
1	.500 [12.70]	.024-.026 [0.61-0.66]	1.424 [36.17]	.926 [23.52]	1-211431-6
1	.250 [6.35]	.024-.026 [0.61-0.66]	1.174 [29.82]	.676 [17.17]	1-211431-5
2	.375 [9.53]	.024-.026 [0.61-0.66]	1.299 [32.99]	.801 [20.35]	1-211431-4
1	.150 [3.81]	.024-.030 [0.61-0.76]	1.074 [27.28]	.576 [14.63]	1-211431-3
- -	.155 [3.94]	.018-.021 [0.46-0.53]	1.064 [27.03]	.576 [14.63]	1-211431-0
- -	.500 [12.70]	.024-.026 [0.61-0.66]	1.424 [36.17]	.926 [23.52]	211431-8
- -	.375 [9.53]	.024-.026 [0.61-0.66]	1.299 [32.99]	.801 [20.35]	211431-6
- -	.250 [6.35]	.024-.026 [0.61-0.66]	1.174 [29.82]	.676 [17.17]	211431-4
- -	.150 [3.81]	.024-.026 [0.61-0.66]	1.074 [27.28]	.576 [14.63]	211431-2

1. THIS AREA SOLDER COATED WITH SN60 OR SN63 SOLDER TO WITHIN .050 [1.27] OF CHAMFER, .000060 [0.0015] MIN THICKNESS. (1-211431-3 & 1-211431-5 & 1-211431-6 ONLY. DIMENSIONS SHOWN APPLY BEFORE SOLDER COATING.
2. THIS AREA SOLDER COATED WITH SN60 OR SN63 SOLDER .000080 [0.0020 MIN THK. SOLDER PERMISSIBLE ON LARGE DIAMETER AS SHOWN. (1-211431-4 ONLY) DIMENSIONS SHOWN APPLY BEFORE SOLDER COATING.
3. THIS AREA SOLDER COATED WITH RoHs COMPLIANT SOLDER .000080 [0.0020] MIN THK. SOLDER PERMISSIBLE ON LARGE DIAMETER AS SHOWN. (1-211431-9 ONLY) DIMENSIONS SHOWN APPLY BEFORE SOLDER COATING.

THIS DRAWING IS A CONTROLLED DOCUMENT.

DIMENSIONS: INCHES [MM]

TOLERANCES UNLESS OTHERWISE SPECIFIED:
0 PLC ± -
1 PLC ± -
2 PLC ± -
3 PLC ± .005 [0.13]
4 PLC ± -
ANGLES ± -

MATERIAL: SEE CALLOUTS
FINISH: SEE CALLOUTS

DWN P.YEAGER 3-28-91
CHK A.SHARPE 3-30-91
APVD A.SHARPE 3-30-91
PRODUCT SPEC —
APPLICATION SPEC —
WEIGHT —

TE Connectivity

NAME: POSTED SOCKET CONTACT ASSY, NIC 600,ROUND,SIZE 22, FRONT RELEASE

SIZE	CAGE CODE	DRAWING NO	RESTRICTED TO
A1	00779	C-211431	—

CUSTOMER DRAWING | SCALE 10:1 | SHEET 1 OF 1 | REV S

4805 (3/11)