THIS DRAWING IS UNPUBLISHED. RELEASED FOR PUBLICATION 20
© COPYRIGHT 20 BY TYCO ELECTRONICS CORPORATION, ALL INTERNATIONAL RIGHTS RESERVED.

LOC	DIST
-	-

REVISIONS

P	LTR	DESCRIPTION	DATE	DWN	APVD
	1	DRAWN	08NOV2010	RB	BC
	2	REMOVE BULK PACKAGE P/N'S FROM TABLE	30NOV2010	WVS	BC

1. MATERIAL: INSULATION - PVC
2. UL STYLE 2651
3. MUST COMPLY WITH DIRECTIVE 2002/95/EC (ROHS)

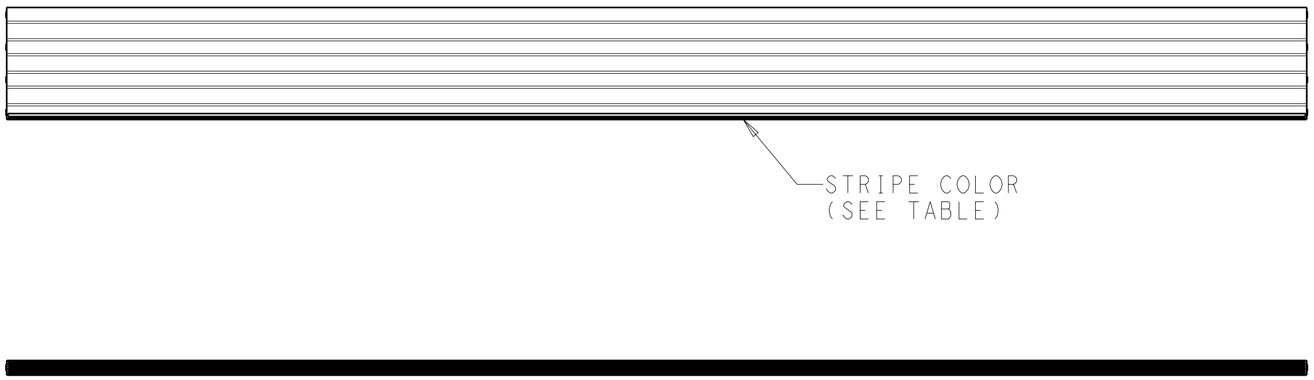

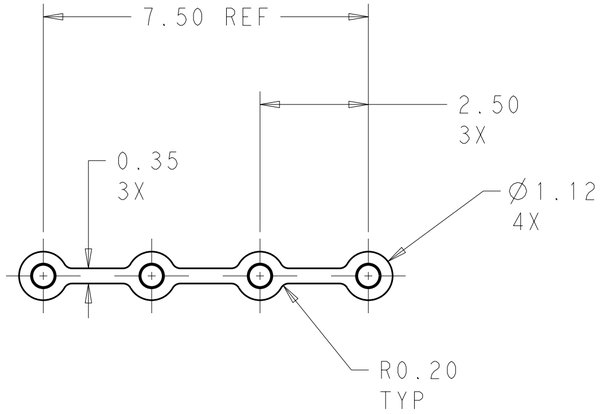

DETAIL J
SCALE 10:1

STANDARD (1000 FT)	BLUE	2154027-6
	GREEN	2154027-4
	RED	2154027-3
	ORANGE	2154027-1
PACKAGING	STRIPE COLOR	PART NO.

TYCO ELECTRONICS
CONFIDENTIAL
AND PROPRIETARY

PROPOSED DESIGN
NOT PRODUCTION TOOLED

DESIGN IS SUBJECT TO
CHANGE WITHOUT NOTICE

THIS DRAWING IS A CONTROLLED DOCUMENT FOR TYCO ELECTRONICS CORPORATION. IT IS SUBJECT TO CHANGE AND THE CONTROLLING ENGINEERING ORGANIZATION SHOULD BE CONTACTED FOR THE LATEST REVISION.

DIMENSIONS: mm

TOLERANCES UNLESS OTHERWISE SPECIFIED:
0 PLC ±-
1 PLC ±-
2 PLC ±0.20
3 PLC ±-
4 PLC ±-
ANGLES ±-

MATERIAL -
FINISH -

DWN R BROWN 08NOV2010
CHK B CHANEY 08NOV2010
APVD -
PRODUCT SPEC 108-2442
APPLICATION SPEC 114-13290
WEIGHT -

Tyco Electronics
Tyco Electronics Corporation
Harrisburg, PA 17105-3608

PRELIMINARY

NAME CABLE, MULTI CONDUCTOR, 2.50 CL, 24 AWG
-

SIZE	CAGE CODE	DRAWING NO	RESTRICTED TO
A2	00779	C-2154027	-

CUSTOMER DRAWING | SCALE 3:1 | SHEET 1 OF 1 | REV 2

1471-9 (2/09)

Pro/ENGINEER DRAWING