THIS DRAWING IS UNPUBLISHED	RELEASED FOR PUBLICATION 20

© COPYRIGHT 20 BY TYCO ELECTRONICS CORPORATION. ALL RIGHTS RESERVED.

PART NUMBER	REV	TERMINATOR	FEED TYPE	DESCRIPTION
1530105-1	B	LEADMAKER	MECH POST FEED	CUTS CARRIER
1530105-2	B	BENCH	MECH PRE FEED	CUTS CARRIER
1530105-6	A	LEADMAKER	MECH POST FEED	CONTINUOUS CARRIER
7-1530105-1	B	LEADMAKER	MECH POST FEED	-1 AND SPARE PARTS
7-1530105-2	B	BENCH	MECH PRE FEED	-2 AND SPARE PARTS
7-1530105-6	A	LEADMAKER	MECH POST FEED	-6 AND SPARE PARTS
7-1530105-7	A	-	-	SPARE PARTS KIT

SET UP GAGE 458637-3

LOC	DIST
A	66

REVISIONS

P	LTR	DESCRIPTION	DATE	DWN	APVD
	A	RELEASED	11MAY2009	KJS	GB
	A1	ECR-09-011141	15MAY2009	MY	TE
	B	REVISED ECR-10-005761	22MAR2010	C.C	S.X

CRIMP DATA	TE TERMINAL		TE CRIMP SPECS
TERMINAL NAME: Ø2.5mm CONTACT PIN/SOCKET CAGE SPRING			
CRIMP	SIZE	TYPE	RANGE
WIRE	2.54 [.100 IN]	F	>1.00-2.50mm2
INSUL	3.56 [.140 IN]	OV	2.10-2.90 [.083-.114 IN]
WIRE STRIP LENGTH 4.00 [.157 IN]		APPL INSTRUCTIONS 408-8322 & 408-8490	
TERMINAL APPL SPEC	114-18022 6 - -	FEED 5 14.30 [.563 IN]	

TERMINALS APPLIED

TE	-	-	-
962852	-	-	-
962858	-	-	-
-	-	-	-
-	-	-	-

WIRE SIZE	CRIMP HEIGHT *	REF SETTING *
2.50mm²	1.85 ±0.05 [.073 ±.002 IN]	B3
2.00mm²	1.70 ±0.05 [.067 ±.002 IN]	C3
1.50mm²	1.55 ±0.05 [.061 ±.002 IN]	D5
-	-	-
-	-	-
-	-	-
-	-	-
-	-	-
-	-	-
-	-	-
-	-	-
-	-	-

1. RECOMMENDED SPARE PARTS.
2. GREASE RAM, CAM, CAM FOLLOWER AND FEED ROD LIGHTLY.
3. CERTAIN TERMINALS REQUIRE LUBRICATION. REFER TO THE APPLICATOR INSTRUCTION SHEET FOR MORE INFORMATION.
4. LUBRICATE DAILY PER THE APPLICATOR INSTRUCTION SHEET SUPPLIED WITH THE APPLICATOR.
5. FEED WILL REQUIRE ADJUSTMENT WHEN CHANGING FROM ONE TERMINAL TO THE OTHER.
6. TENSILE VALUE FOR 2.00mm2 & 2.50mm2 TO BE 165N, NOT VALUES REFERENCED BY 114-18022.

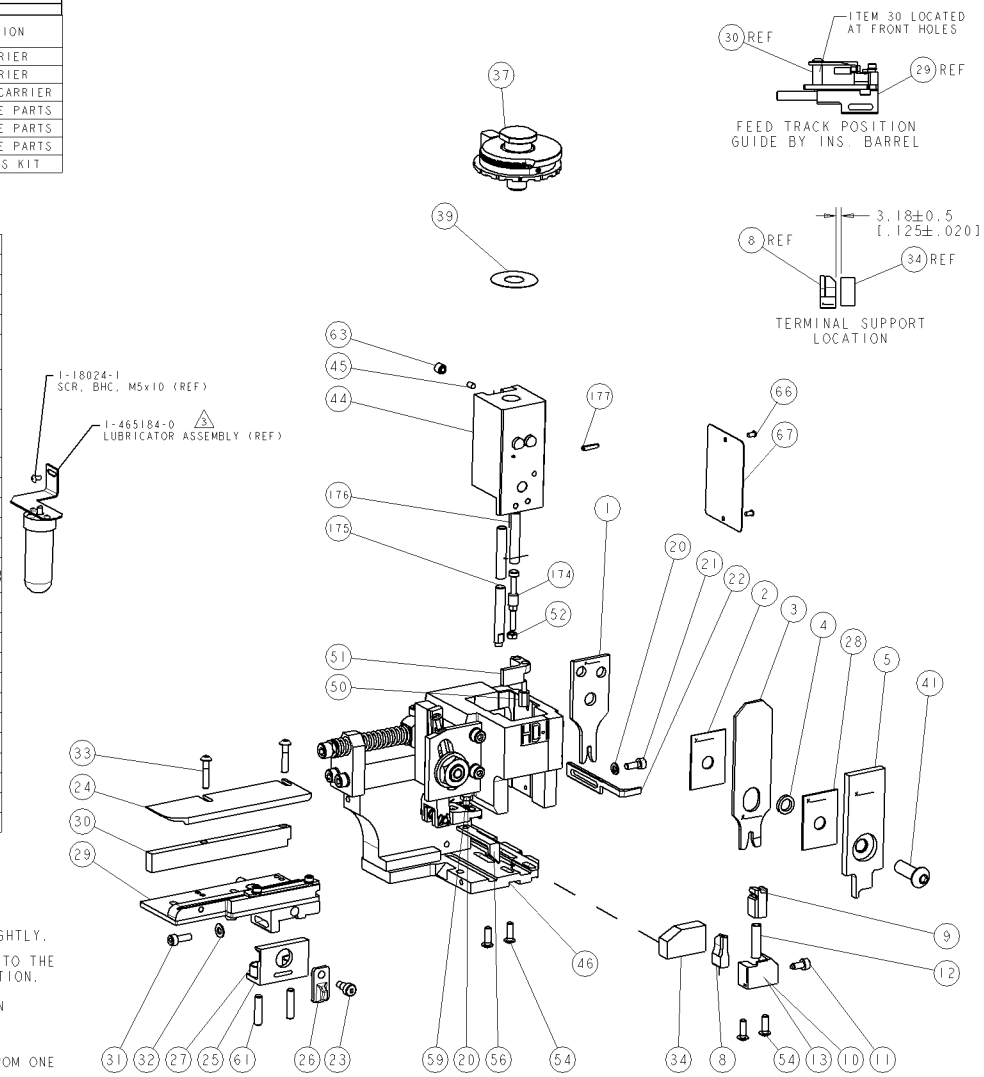

-	1	1	1	1	1	1	993111-8	PIN, SLOTTED SPRING 3.0 X 12.0	177
-	2	2	2	2	2	2	3-22280-7	SPRING, COMPRESSION	176
-	1	1	1	1	1	1	1752353-1	GUIDE PIN,HOLDDOWN	175
-	1	1	1	1	1	1	1901680-1	GUIDE PIN,HOLDDOWN	174
-	1	1	1	1	1	1	1338705-3	DOCUMENTATION PACKAGE	71
-	1	1	1	1	1	1	461264-5	PLATE, IDENTIFICATION	67
-	2	2	2	2	2	2	21017-2	SCREW, DRIVE	66
-	1	1	1	1	1	1	3-18031-0	SCR, SET, CUP POINT M6 X 6.0	63
-	2	2	2	2	2	2	2-18032-5	SCR, SET, FLT POINT M5 X 20.0	61
-	1	1	1	1	1	1	5-18022-2	SCR, HEX HD CAP M4 X 8.0	59
-	1	1	1	1	1	1	1338685-1	PAWL, FEED	56
-	4	4	4	4	4	4	18024-8	SCR, BTN SKT HD CAP (M4 X 12.0)	54
-	1	1	1	1	1	1	1-18030-0	NUT, HEX, REG M3.5	52
-	1	1	1	1	1	1	1901681-1	HOLDDOWN, TERMINAL	51
-	1	1	1	1	1	1	2-1752354-4	STANDOFF,HOLD-DOWN	50
-	1	1	1	1	1	1	18024-3	SCR, BTN SKT HD CAP (M3 X 10.0)	49
-	-	1	-	-	1	-	1338675-1	CAM, UNIVERSAL PRE-FEED	48
-	1	-	1	1	-	1	1338676-1	CAM, UNIVERSAL POST-FEED	47
-	1	1	1	1	1	1	1320999-3	APPLICATOR SUBASSEMBLY, HDI	46
-	1	1	1	1	1	1	690191-1	PLUG,NYLON	45
-	1	1	1	1	1	1	1633724-1	RAM, (SIDE FEED)	44
-	1	1	1	1	1	1	2-18024-6	SCR, BTN SKT HD CAP (M8 X 25.0)	41
-	1	1	1	1	1	1	690125-1	SHIM SUB-ASSY	39
-	1	1	1	1	1	1	879103-2	FINE ADJUST HEAD ASSEMBLY	37
-	1	1	1	1	1	1	1-1752356-3	SUPPORT, TERMINAL	34
-	2	2	2	2	2	2	1-18024-0	SCR, BTN SKT HD CAP (M4 X 20.0)	33
-	1	1	1	1	1	1	18027-2	WASHER, FLAT, REG M4	32
-	1	1	1	1	1	1	1-18023-2	SCR, SKT HD CAP M4 X 12.0	31
-	1	1	1	1	1	1	1320908-8	SPACER, STRIP GUIDE	30
-	1	1	1	1	1	1	1633073-2	STRIP GUIDE ASSEMBLY	29
-	1	1	1	1	1	1	1-455888-0	SPACER, CRIMPER	28
-	2	2	2	2	2	2	1-22284-0	SPRING, COMPRESSION	27
-	1	1	1	1	1	1	356835-1	LEVER, DRAG RELEASE	26
-	1	1	1	1	1	1	240792-1	DRAG, TERMINAL	25
-	1	1	1	1	1	1	1320928-1	PLATE, STRIP GUIDE	24
-	1	1	1	1	1	1	980371-4	SCR, SKT HD SHLDR 5.0 DIA X 6.0	23
-	1	-	1	1	-	1	690472-2	STRIPPER	22
-	1	1	1	1	1	1	1-18023-1	SCR, SKT HD CAP M4 X 10.0	21
-	2	2	2	2	2	2	18025-2	WASHER, SPRG LOCK, REG M4	20
-	-	1	-	-	1	-	690472-1	STRIPPER	19
1	-	-	-	1	-	-	1338684-1	SHEAR HOLDER, FRONT	13
-	-	-	-	-	-	-	-	-	13
-	1	1	1	1	1	1	3-22280-3	SPRING, COMPRESSION	12
-	1	1	1	1	1	1	356885-4	STOP, SHEAR	11
1	-	1	1	-	1	1	1320921-1	SHEAR HOLDER, FRONT, CUT	10
1	-	1	1	1	1	1	454276-1	FLOATING SHEAR, FRONT	9
1	2	2	2	1	1	1	1-1333206-8	ANVIL, COMBINATION 100	8
-	-	-	-	-	-	-	-	-	7
-	-	-	-	-	-	-	-	-	6
-	1	1	1	1	1	1	2-455889-0	DEPRESSOR, SHEAR	5
-	1	1	1	1	1	1	238011-8	BLOCK, CRIMPER SPACER	4
1	2	2	2	1	1	1	805783-5	CRIMPER, INSULATION	3
-	1	1	1	1	1	1	455888-9	SPACER, CRIMPER	2
1	2	2	2	1	1	1	456407-8	CRIMPER, WIRE PREMIUM	1
-77	-76	-72	-71	-6	-2	-1	PART NO	DESCRIPTION	ITEM NO

* WARNING
ON INSTALLATION, SET WIRE DISC TO LARGEST WIRE SIZE SETTING. USE OF SETTINGS BELOW MIN. REQUIRED CRIMP HEIGHT SETTING WILL CAUSE DAMAGE TO CRIMP TOOLING.

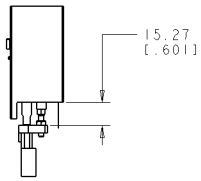

HOLDDOWN SET-UP

VIEW B ROTATED 180°

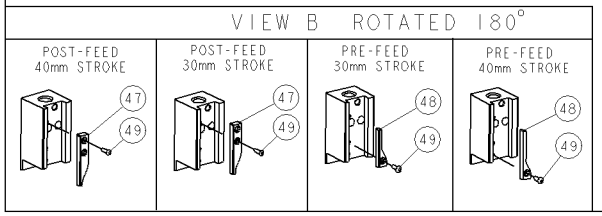

DWN	K. STAKEM	23MAR2009
CHK	G. BAILEY	23MAR2009
APVD	T. FLAIN	23MAR2009

Tyco Electronics
Tyco Electronics
Harrisburg, PA 17105-3608

DIMENSIONS: mm [IN]
TOLERANCES UNLESS OTHERWISE SPECIFIED: 0 PLC ±; 1 PLC ±; 2 PLC ±; 3 PLC ±; 4 PLC ±; ANGLES ±°
MATERIAL -
FINISH -
PRODUCT SPEC -
APPLICATION SPEC See Table
WEIGHT -

NAME: FINE ADJUST SIDE FEED HDI APPLICATOR

SIZE	CAGE CODE	DRAWING NO	RESTRICTED TO
A1	00779	C-1530105	-

CUSTOMER DRAWING | SCALE 3:5 | SHEET 1 OF 1 | REV B

AMP 4885 REV 31MAR2000