REV.	MODIFICATION.	DATE	DRN
01	Production Release	03/01/08	TC

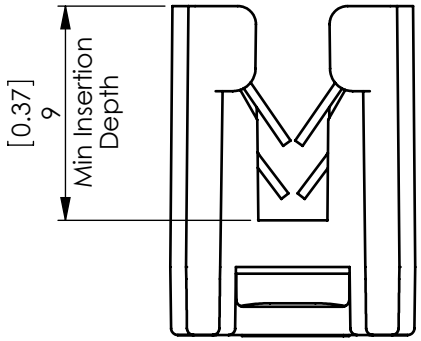

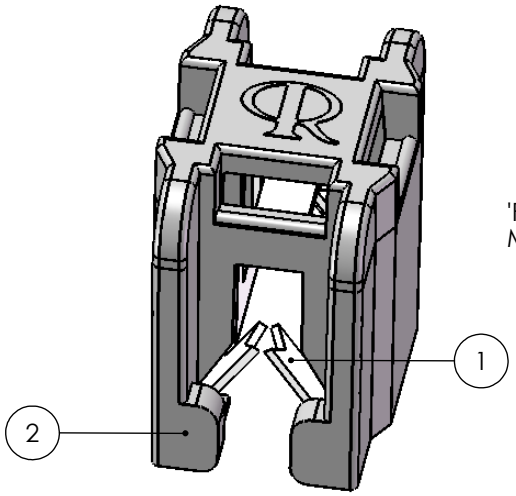

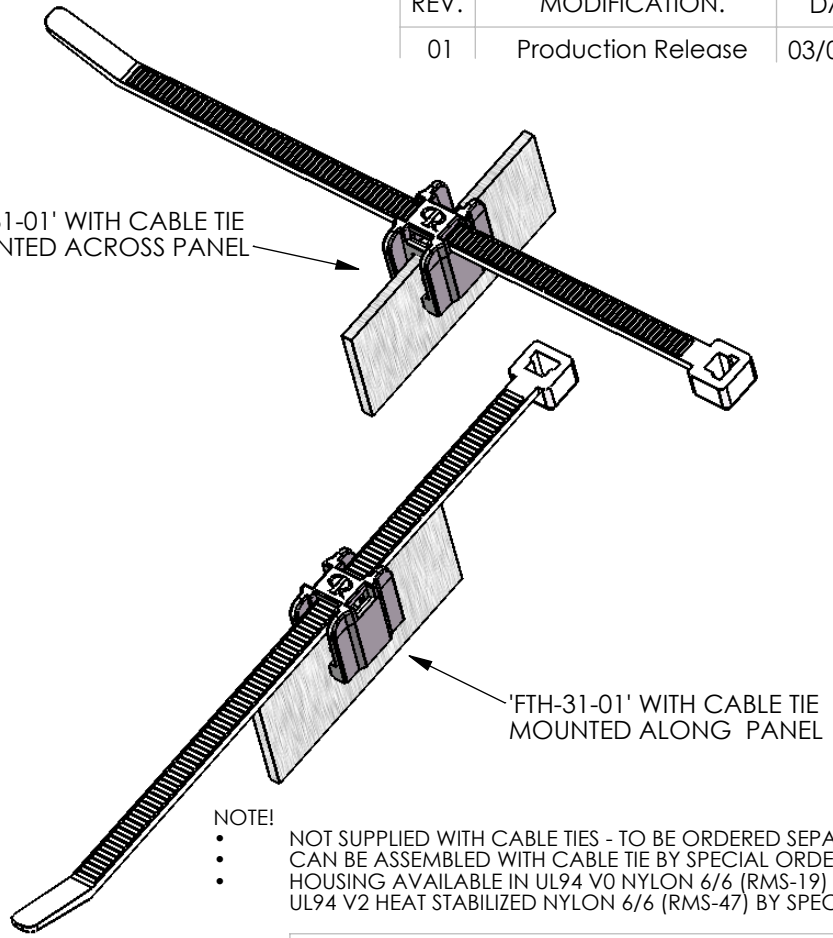

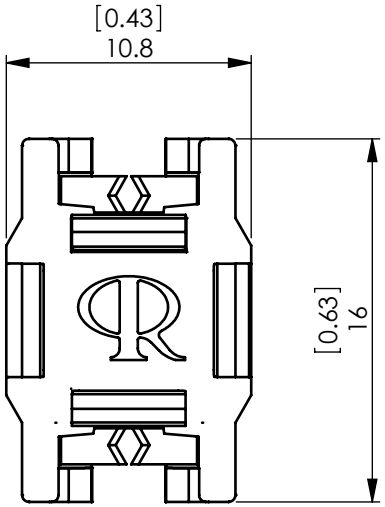

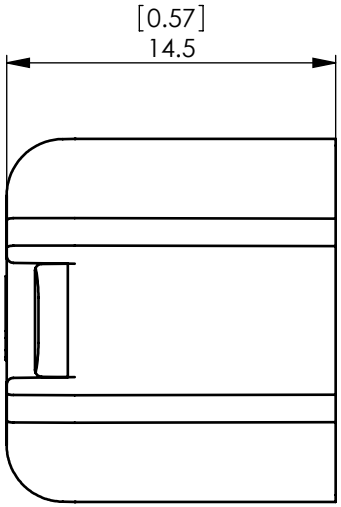

NOTE!
- NOT SUPPLIED WITH CABLE TIES - TO BE ORDERED SEPARATELY
- CAN BE ASSEMBLED WITH CABLE TIE BY SPECIAL ORDER ONLY
- HOUSING AVAILABLE IN UL94 V0 NYLON 6/6 (RMS-19) AND UL94 V2 HEAT STABILIZED NYLON 6/6 (RMS-47) BY SPECIAL ORDER

INFORMATION CONTAINED IN THIS DOCUMENT IS CONFIDENTIAL TO RICHCO INTERNATIONAL Co. Ltd. AND MAY NOT BE DISCLOSED OR REPRODUCED IN WHOLE OR PART WITHOUT THEIR WRITTEN CONSENT.

Richco®

ALL DIMENSIONS IN mm [INCH]

SEE ENGINEERING DRAWINGS FOR TOLERANCE INFORMATION

THIRD ANGLE

ITEM	DESCRIPTION	MATERIAL	COLOUR	PANEL THICKNESS	RETENTION FORCE	CABLE TIES ACCEPTED
2	HOUSING	NYLON 6/6 UL94 V2 (RMS-01)	BLACK	0.8 - 3 [0.03 - 0.12]	TO STEEL PANEL: Minimum 25N 0.8 [0.03] Panel Minimum 45N 3 [0.12] Panel TO PLASTIC PANEL: Minimum 150N 2.4 - 3 [0.09 - 0.12]	WITE/WIT-30 / 40 / 50 QTE-18 / 30 / 50
1	METAL CLIP	STAINLESS STEEL (RMS-365) GRADE 304 (1.4301)	TYPE '2B' BRIGHT FINISH			

MATERIAL: SEE TABLE				COLOR: SEE TABLE	
DESCRIPTION: EDGE CLIP TIE HOLDER				PART No: FTH-31-01	
DRG No: 07-073		NPR No: 2005-205-3		Mass:(g) 1.4	SHEET SIZE A4
DRN TC	DATE 10/01/06	CHKD JC	DATE 31/07/07	SCALE NTS	SHEET No. 1 OF 1

FORM No. 0178/00