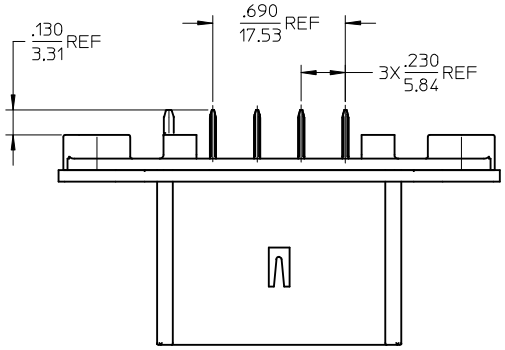

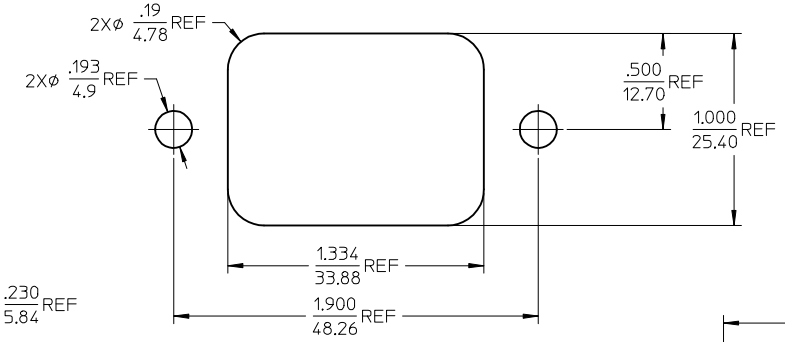

RECOMMENDED PANEL CUTOUT
MAX PANEL THICKNESS .080/2.03

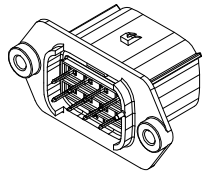

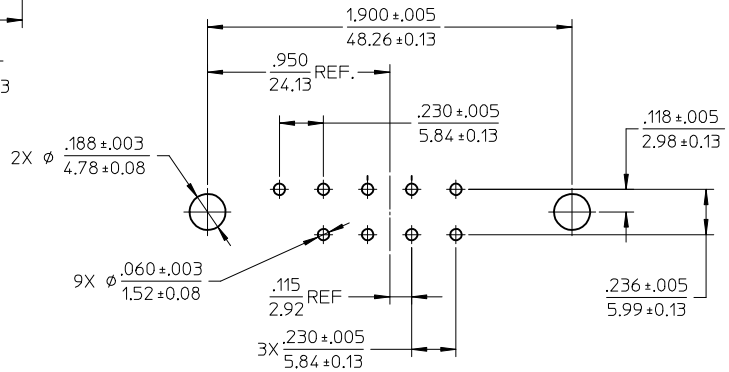

RECOMMENDED PCB LAYOUT
COMPONENT VIEW
TOLERANCES ARE NON-ACCMULATIVE

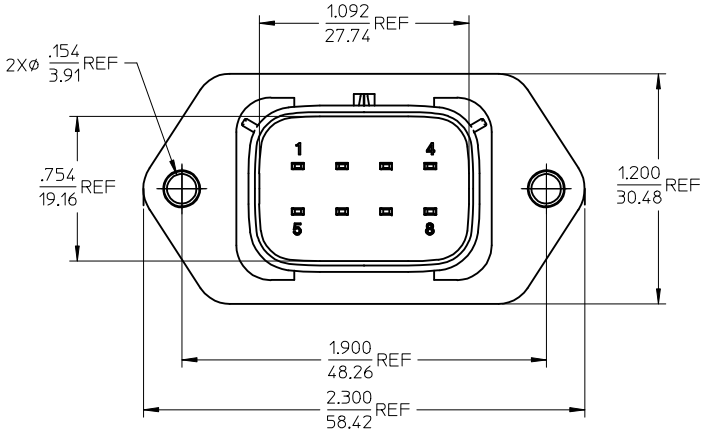

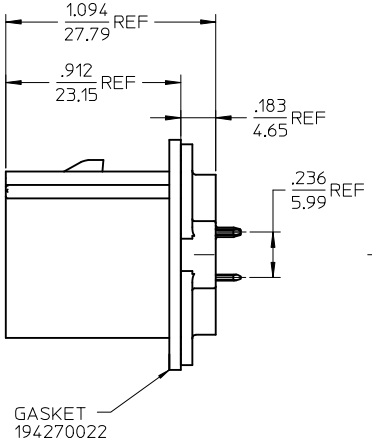

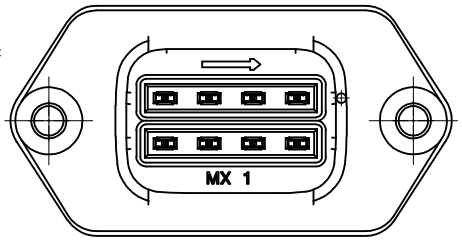

MATERIAL NUMBER	TERMINAL PLATING
194280013	TIN
194280029	SELECT GOLD/TIN

NOTES:

1. MATERIALS:
   HOUSING: POLYESTER (PBT), GLASS FILLED, UL94 V-0,
   COLOR: BLACK
   TERMINALS: COPPER ALLOY
2. FINISHES: 1. TIN ONLY: 100µIN TIN OVER 50µIN NICKEL
   2. TIN/GOLD: 30µIN SELECT GOLD (CONTACT MATING AREA),
   100µIN SELECT TIN (PCB TAIL AREA) OVER 50µIN NICKEL OVERALL.
3. PRODUCT SPECIFICATION: PS-19428-001.
4. PACKAGING SPECIFICATION: PK-19428-002.
5. MATES WITH: 19418 SERIES RECEPTACLE ASSEMBLIES.

PRODUCTION RELEASE
EC NO: ETC2005-0213
DRWN:JPAWLICK 2005/06/10
CH'KD:JPAWLICK 2005/06/14
APPR:RDEROSS 2005/06/14
DESCRIPTION
A
REV

QUALITY SYMBOLS
▼=0
Ⓒ=0

GENERAL TOLERANCES (UNLESS SPECIFIED)	mm	INCH
4 PLACES	± ---	± ---
3 PLACES	± ---	± .015
2 PLACES	± 0.38	± ---
1 PLACE	± ---	± ---
ANGULAR ± 1 °		

DRAFT WHERE APPLICABLE MUST REMAIN WITHIN DIMENSIONS

DIMENSION STYLE	SCALE	DESIGN UNITS
IN/MM	2:1	INCH

THIRD ANGLE PROJECTION

DRAWN BY BRUPERT	DATE 04/06/16	TITLE 8-WAY STRAIGHT HEADER ASSEMBLY, SHORT VERSION
CHECKED BY JPAWLICK	DATE 04/06/16	
APPROVED BY RDEROSS	DATE 04/06/16	molex MOLEX INCORPORATED
MATERIAL NO. SEE CHART		DOCUMENT NO. SD-19428-005 / SHEET NO. 1 OF 1

SIZE C

THIS DRAWING CONTAINS INFORMATION THAT IS PROPRIETARY TO MOLEX INCORPORATED AND SHOULD NOT BE USED WITHOUT WRITTEN PERMISSION