THIS DRAWING IS UNPUBLISHED. RELEASED FOR PUBLICATION -,- .
© COPYRIGHT - BY TYCO ELECTRONICS CORPORATION. ALL RIGHTS RESERVED.

LOC	DIST
AD	00

REVISIONS

P	LTR	DESCRIPTION	DATE	DWN	APVD
	H	ECO 05 006319	22MAY06	BSV	MK
	H1	REV PER ECO-09-021510	10SEP09	KK	AEG

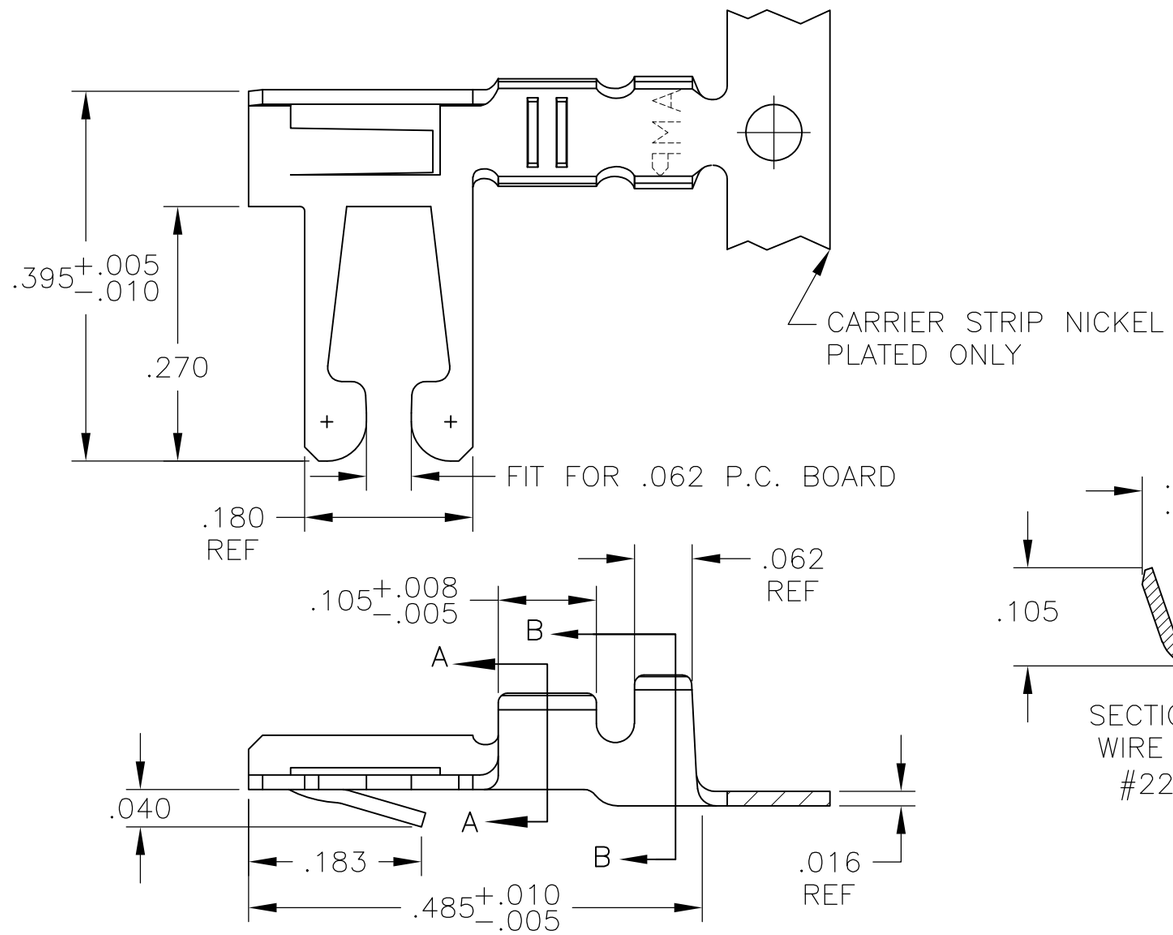

1. REFER TO CUSTOMER 582370 SERIES AND CUSTOMER 582380 SERIES FOR HOUSING AND P.C. BOARD REQUIREMENTS

2. .000015 GOLD OVER .000050 NICKEL IN CONTACT AREA. REMAINDER OF CONTACT .000050 NICKEL.

3. .000030 GOLD OVER .000050 NICKEL IN CONTACT AREA. .000050 NICKEL ON REMAINDER OF CONTACT.

4. L-R FEED FOR MINI-APPL.

5. OBSOLETE PARTS: OBSOLETE CIS STREAMLINING PER D.RENAUD/D.SINISI

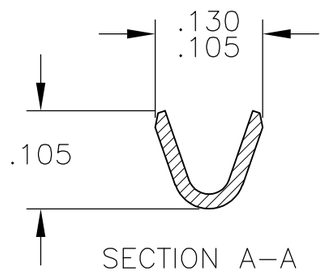

SECTION A-A
WIRE RANGE
#22-#18

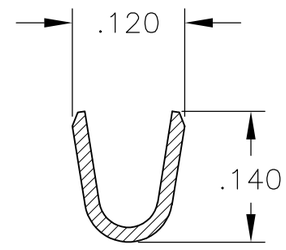

SECTION B-B
INSULATION RANGE
.060-.090

5	OBSOLETE	MATTE TIN	4 5-530006-5
		MATTE TIN	5-530006-2
		2	4 530006-7
		3	4 530006-6
5	OBSOLETE	TIN PLATE	4 530006-5
	OBSOLETE	2	530006-4
	OBSOLETE	3	530006-3
		TIN PLATE	530006-2
		FINISH	PART NUMBER

THIS DRAWING IS A CONTROLLED DOCUMENT.

DIMENSIONS: INCHES

TOLERANCES UNLESS OTHERWISE SPECIFIED:

0 PLC	± -
1 PLC	± -
2 PLC	± -
3 PLC	± .005
4 PLC	± .0005
ANGLES	± -

MATERIAL: BERYLLIUM COPPER

FINISH: SEE TABLE

DWN	M.BINNER	29MAR01
CHK	M.MILLER	05APR01
APVD	M.MILLER	05APR01
PRODUCT SPEC	—	
APPLICATION SPEC	—	
WEIGHT	—	

Tyco Electronics

Tyco Electronics Corporation
Harrisburg, Pa 17105-3608

NAME: CONTACT, 22-18 AWG, DUO-TYNE FLAG WITH TAPERED BEAMS

SIZE	CAGE CODE	DRAWING NO	RESTRICTED TO
A3	00779	C-530006	—

CUSTOMER DRAWING

SCALE	SHEET	REV
6:1	1 OF 1	H1