MICRO SWITCH
A DIVISION OF MINNEAPOLIS-HONEYWELL REGULATOR COMPANY
FREEPORT, ILLINOIS
FED. MFR. CODE 91929

TERMINAL BLOCK-ENCLOSED

CATALOG LISTING
18PA3

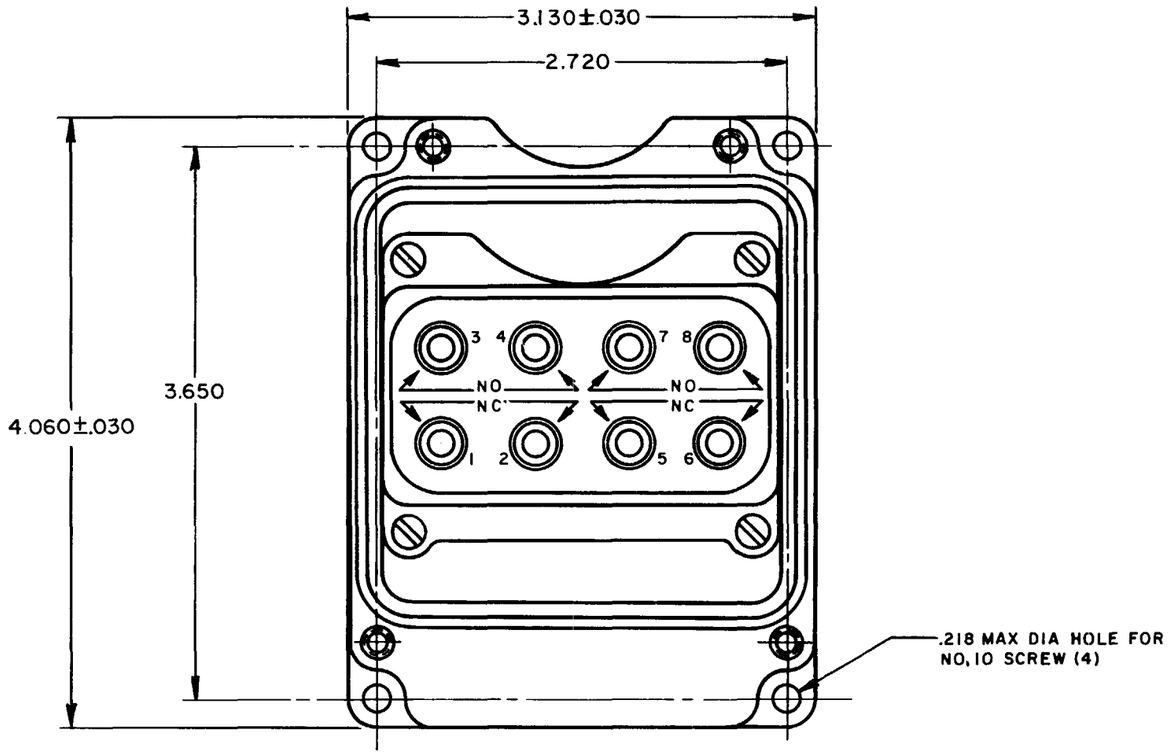

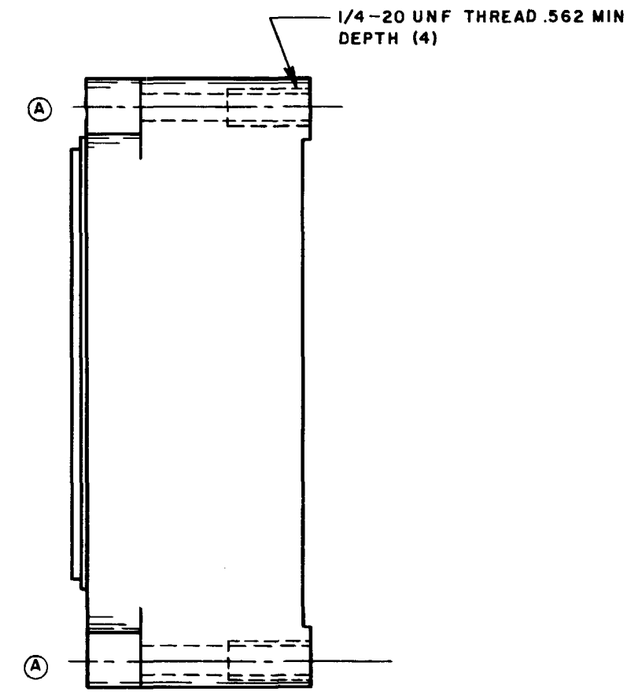

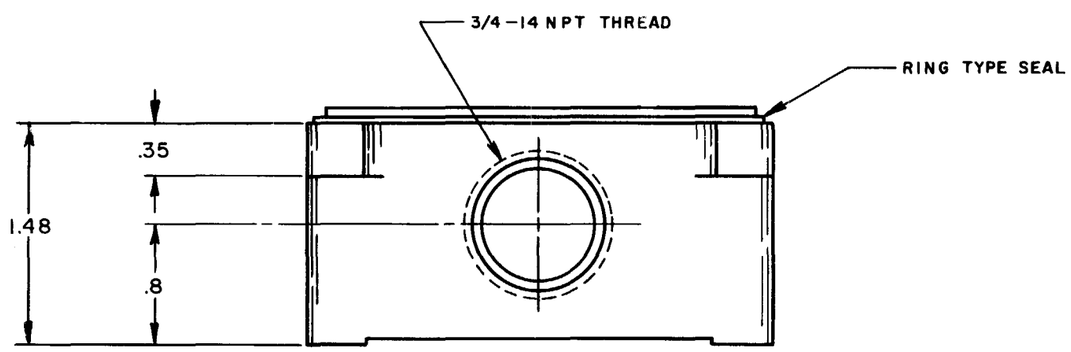

NOTE—
1—ALUMINUM HOUSING FINISHED IN BLUE PAINT
2—TERMINAL BLOCK IS REMOVABLE FOR WIRING, 8-32 NC TERMINAL SCREWS AND LOCKWASHER (SEMS) (8), LUGS INCLUDED FOR TERMINATION WITH STRIPPED BARE WIRE (8)

THIS DRAWING COVERS A PROPRIETARY ITEM AND IS THE PROPERTY OF MICRO SWITCH, A DIVISION OF MINNEAPOLIS-HONEYWELL REGULATOR CO. THIS DRAWING IS NOT TO BE COPIED OR USED WITHOUT THE APPROVAL OF MICRO SWITCH.

CHARACTERISTICS	ELECTRICAL DATA	
	CONTACT ARRANGEMENT	BREAK DISTANCE

SCALE—FULL
DO NOT SCALE PRINT

UNLESS OTHERWISE SPECIFIED
DIMENSIONS ARE IN INCHES
TOLERANCES ARE:

ONE PLACE	(.0)	±.030
TWO PLACE	(.00)	±.015
THREE PLACE	(.000)	±.005
ANGLES		±

WEIGHT

18PA3 | M | DRAWING NUMBER | RELEASE NO. SR 8252 | REPLACES

ISSUE 3

REVISIONS
A CO 14341 MBF 20 JAN 60
B CO80837 JAK 10 MAY 95

DRAWN	KAF	6 JUNE 59
CHECK	GCH	9 JUNE 59
CHECK	JWM	9 JUNE 59
CHECK		

FORMTEK

Mouser Electronics

Authorized Distributor

Click to View Pricing, Inventory, Delivery & Lifecycle Information:

Honeywell:

18PA3