THIS DRAWING IS UNPUBLISHED. RELEASED FOR PUBLICATION -,- .
© COPYRIGHT - By - ALL RIGHTS RESERVED.

LOC	DIST
AF	50

REVISIONS

P	LTR	DESCRIPTION	DATE	DWN	APVD
	E1	REVISED PER ECO-13-012211	30JUL13	JR	PD

1 CONTINUOUS STRIP ON REELS.

2 MATING TAB THK IS .032±.001

3 WIRE SIZE IS #14-#10 AWG

4 INSULATION RANGE IS .150-.200 DIA

5 REELED WITH INTERLEAVING PAPER

6 PRELIMINARY - NOT FOR PRODUCTION

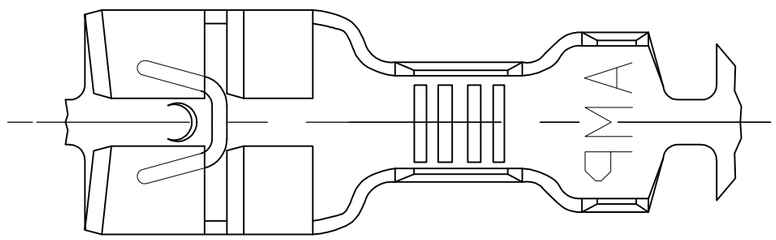

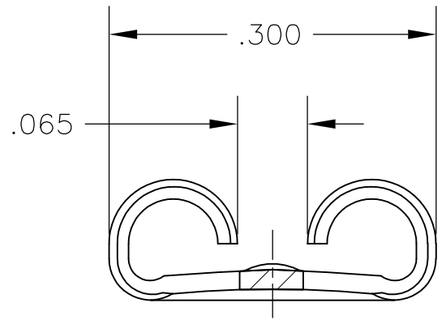

VIEW A-A

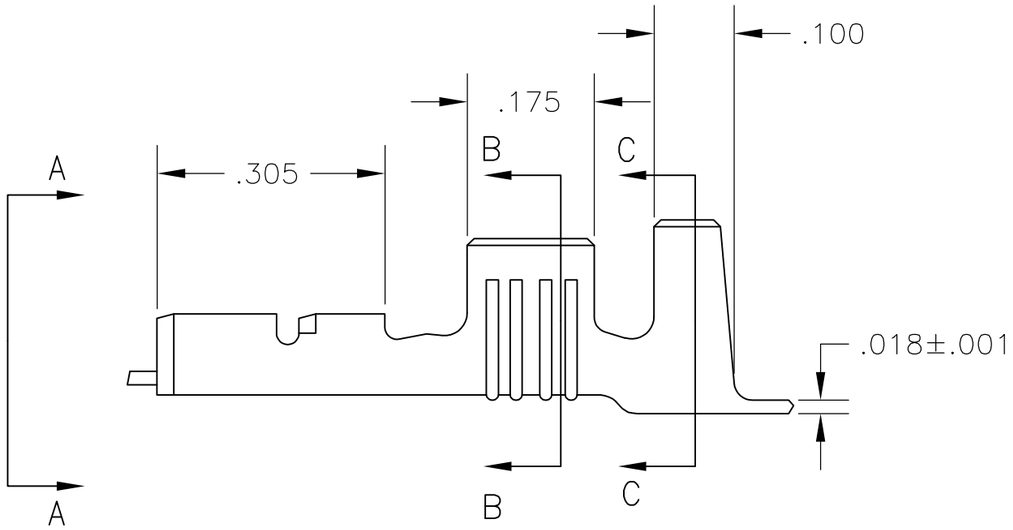

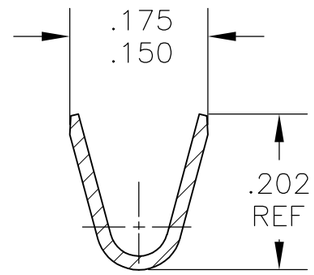

SECTION B-B

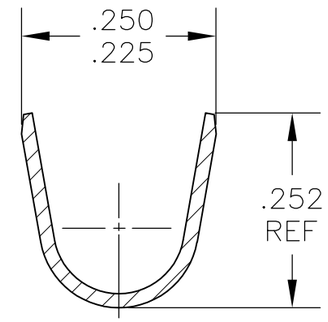

SECTION C-C

5	6 63435-3
	63435-1
	PART NO.

THIS DRAWING IS A CONTROLLED DOCUMENT.

DIMENSIONS: INCHES

TOLERANCES UNLESS OTHERWISE SPECIFIED:

0 PLC	± -
1 PLC	± -
2 PLC	± -
3 PLC	± .010
4 PLC	± -
ANGLES	± -

MATERIAL: BRASS

FINISH: SILVER

DWN	JR RUTH	10/10/86
CHK	G YETTER	10/12/86
APVD	R KUZO	10/12/86
PRODUCT SPEC	—	
APPLICATION SPEC	—	
WEIGHT	—	

CUSTOMER DRAWING

TE Connectivity

NAME: RECEPTACLE, FASTON, LOW-INSERTION, .250 SERIES
—

SIZE	CAGE CODE	DRAWING NO	RESTRICTED TO
A3	00779	C-63435	—

SCALE	SHEET	REV
5:1	1 OF 1	E1