THIS COPY IS PROVIDED ON A RESTRICTED BASIS AND IS NOT TO BE USED IN ANY WAY DETRIMENTAL TO THE INTERESTS OF PANDUIT CORP.

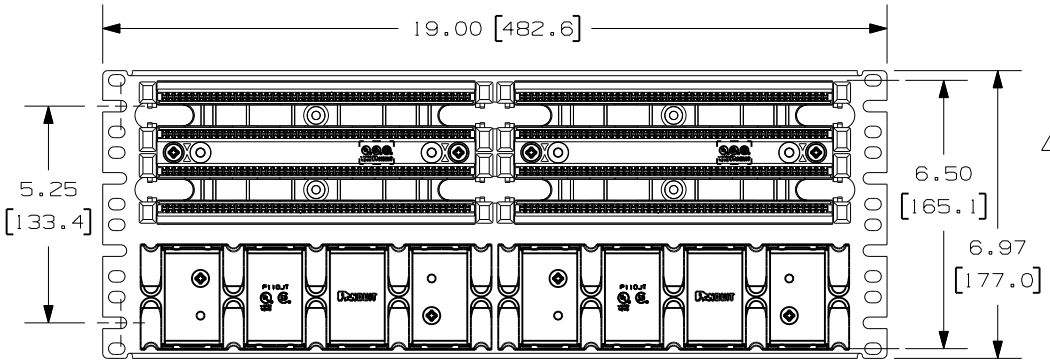

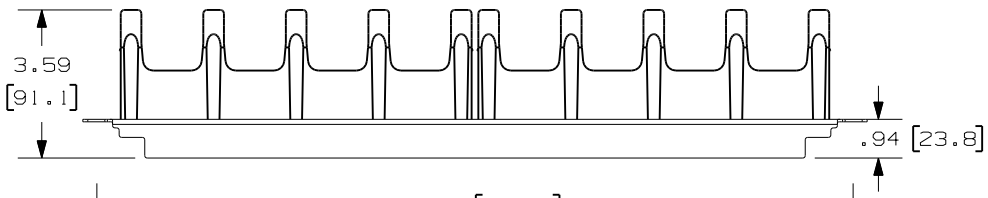

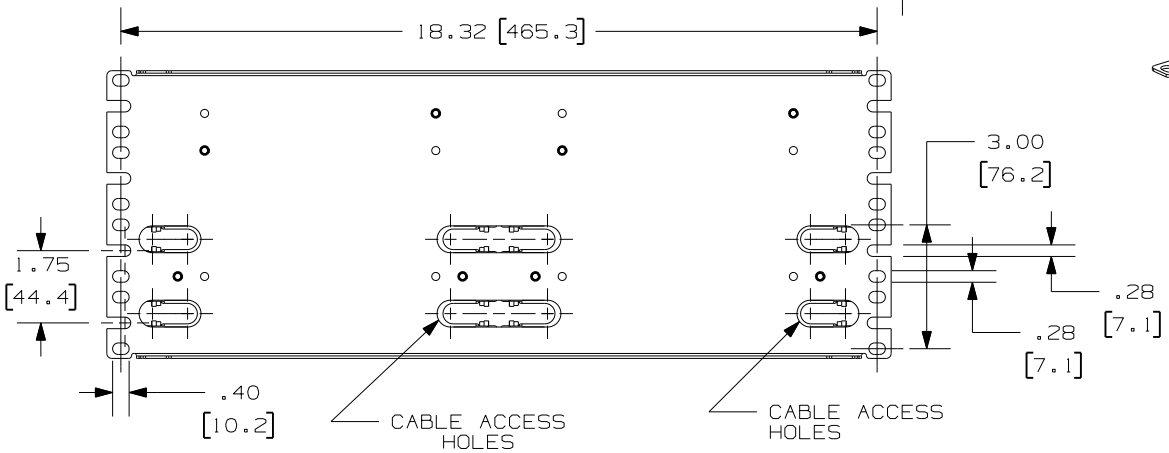

110 WIRING BLOCK KIT					
PANDUIT PART NO.	CONNECTING BLOCK 4 PAIR	CONNECTING BLOCK 5 PAIR	LABEL HOLDER	LABEL	WEIGHT
P110B1004R4WJY	40	8	4	4	4.21 LB/ea (1913.6 g/ea)
P110B1005R4WJY	-	40	4	4	4.21 LB/ea (1913.6 g/ea)

A

NOTES:
1. SEE CURRENT CATALOG FOR ADDITIONAL PART NUMBER SUFFIXES TO INDICATE PACKAGE QUANTITY.
2. STAMPING ASSEMBLY IS DESIGNED FOR 19" RACK MOUNT APPLICATIONS.
3. 110 BASES AND TROUGHS ARE PRE-ASSEMBLED TO PANEL. (4) #12 MOUNTING SCREWS AND (4) METRIC M6x1x15MM SCREWS ARE ALSO PROVIDED FOR RACK MOUNTING.
4. A 110 WIRING BLOCK KIT IS ALSO INCLUDED WITH EACH ASSEMBLY (SEE CHART).
5. DIMENSIONS IN BRACKETS ARE IN METRIC.

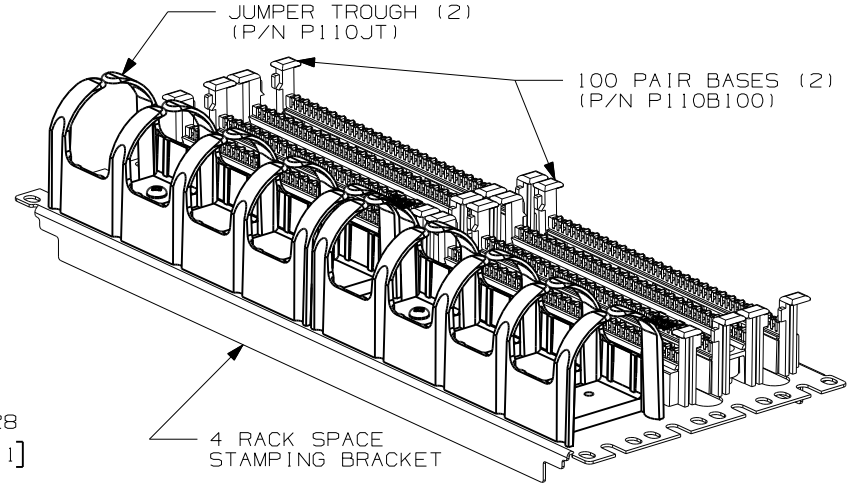

1	7-12-07	BJN	WFMI	A. QTY 40 WAS 20, 8 WAS & 4 WAS 2	02479-346		REGA		
R	3-24-06	NER	WJC	RELEASED TO PRODUCTION	02479-346		RMD		
REV	DATE	BY	CHK	DESCRIPTION	ECN - R		CUST	SUP	OTH

MODEL FILENAME: D35735AB_96ASSY_04

DRAWING FILENAME: M02479NG_DC346_00B.PRT

SIZE: A

TITLE: 110 RACK MOUNTABLE BASE & JUMPER TROUGH WITH 4/5 PAIR CONNECTOR KIT CUSTOMER DRAWING

PANDUIT™ CORP.
TINLEY PARK, ILL 60477

THIRD ANGLE PROJECTION

ALL DIMENSIONS ARE GIVEN IN INCHES, UNLESS OTHERWISE SPECIFIED.
DIMENSIONAL TOLERANCES ARE:
(.X) ± (.XXX) ±
(.XX) ± ANGLES ±

DRAWN BY: NER

DATE: 3-24-06

CHK'D: WJC

REVIEW DRAWING NUMBERS

MAT'L: TROUGH & BASES (POLYCARBONATE) PANEL(C.R.S. 16 GAUGE)

I.I. NUMBER

PRODUCT SPEC

WORK INSTRUCTION

SCALE: NONE

PART NO.: SEE CHART

DRAWING NO.: 02479-346