MICRO SWITCH
a Honeywell Division
FED. MFG. CODE 91929

SWITCH - ENCLOSED

CATALOG LISTING
1EN1-14B

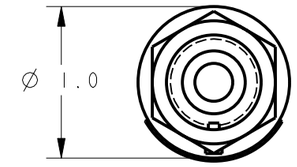

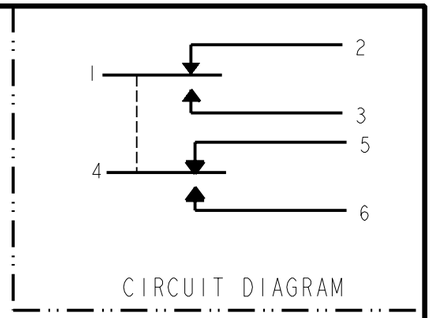

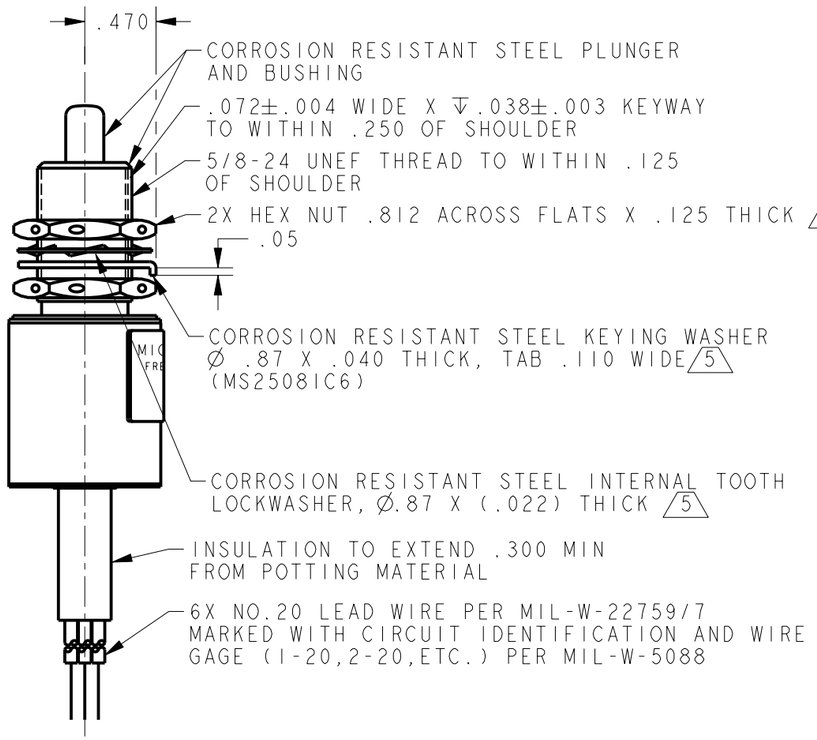

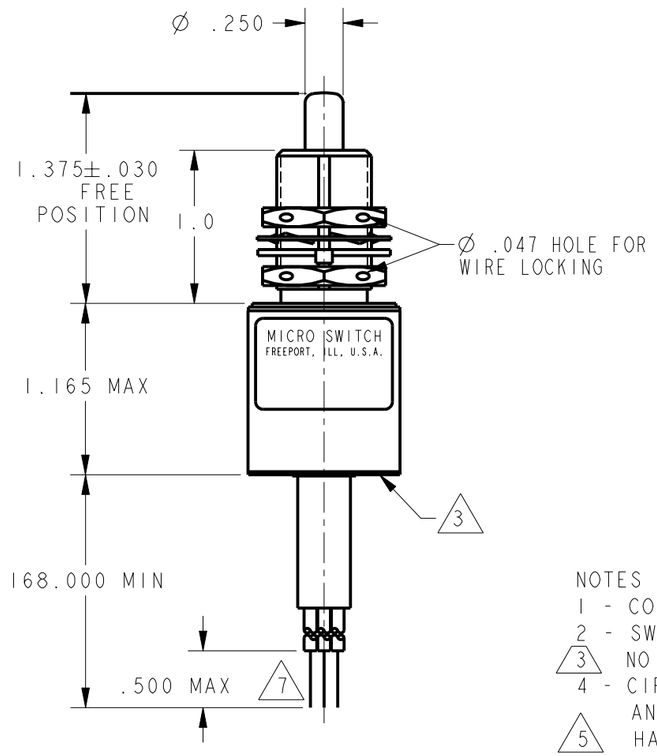

NOTES
1 - CORROSION RESISTANT STEEL ENCLOSURE
2 - SWITCH SEALED PER MIL-PRF-8805 SYMBOL 4
3 NO POTTING PERMISSIBLE ON SWITCH BOTTOM
4 - CIRCUIT DIAGRAM, DATE CODE, FED. MFG. CODE AND CATALOG LISTING ARE SHOWN ON NAMEPLATE
5 HARDWARE MAY BE PACKAGED UNASSEMBLED PER MIL-PRF-8805
6 - COINCIDENCE OF OPERATING AND RELEASING POINTS .010 INCH OF PLUNGER TRAVEL
7 SOLDER DIP WITH 60/40 SOLDER

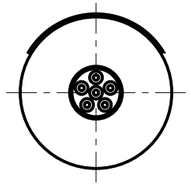

THIS DRAWING COVERS A PROPRIETARY ITEM AND IS THE PROPERTY OF MICRO SWITCH. A DIVISION OF HONEYWELL. THIS DRAWING IS NOT TO BE COPIED OR USED WITHOUT THE APPROVAL OF MICRO SWITCH

THIRD ANGLE PROJECTION

SCALE FULL

DO NOT SCALE PRINT

UNLESS OTHERWISE SPECIFIED TOLERANCES ARE

ONE PLACE	(.0)	±.030
TWO PLACE	(.00)	±.015
THREE PLACE	(.000)	±.005
ANGLES		±

WEIGHT 14.1 OZ MAX

ANSI Y14.5M-1982 APPLIES

CHARACTERISTICS

OPERATING FORCE	6-12 LB
FULL OVERTRAVEL FORCE	30 LB MAX
RELEASE FORCE	4 LB MIN
PRETRAVEL	.040 MAX
DIFFERENTIAL TRAVEL	.020 MAX
OVERTRAVEL	.250 MIN
FREE POSITION	

ELECTRICAL DATA

CONTACT ARRANGEMENT
2X S P D T

LOAD	28 VDC	
	SEA LEVEL	50,000 FT.
RES	4	4
IND	2	2
MOTOR	4	

1EN1-14B
CATALOG LISTING
PAGE 1 OF 1
RELEASE NO. PR-7476
REPLACES
ISSUE 9
CHECK
REVISIONS
A 200716 S A V 19 JUL 00
CHECK
19 JUL 00
SAV
CHECK
19 JUL 00
SAV
PTC/CAD 2D
DRAWN

Mouser Electronics

Authorized Distributor

Click to View Pricing, Inventory, Delivery & Lifecycle Information:

Honeywell:

1EN1-14B