C8051F000/1/2/5/6/7
C8051F010/1/2/5/6/7

Mixed-Signal 32KB ISP FLASH MCU Family

ANALOG PERIPHERALS
- **SAR ADC**
  - 12-Bit (C8051F000/1/2, C8051F005/6/7)
  - 10-bit (C8051F010/1/2, C8051F015/6/7)
  - ±1LSB INL; No Missing Codes
  - Programmable Throughput up to 100ksps
  - Up to 8 External Inputs; Programmable as Single-Ended or Differential
  - Programmable Amplifier Gain: 16, 8, 4, 2, 1, 0.5
  - Data Dependent Windowed Interrupt Generator
  - Built-in Temperature Sensor (± 3°C)
- **Two 12-bit DACs**
- **Two Analog Comparators**
  - Programmable Hysteresis Values
  - Configurable to Generate Interrupts or Reset
- **Voltage Reference**
  - 2.4V; 15 ppm/°C
  - Available on External Pin
- **Precision VDD Monitor/Brown-out Detector**

ON-CHIP JTAG DEBUG & BOUNDARY SCAN
- On-Chip Debug Circuitry Facilitates Full Speed, Non-Intrusive In-System Debug (No Emulator Required!)
- Provides Breakpoints, Single Stepping, Watchpoints, Stack Monitor
- Inspect/Modify Memory and Registers
- Superior Performance to Emulation Systems Using ICE-Chips, Target Pods, and Sockets
- IEEE1149.1 Compliant Boundary Scan
- Low Cost Development Kit

HIGH SPEED 8051 µC CORE
- Pipelined Instruction Architecture; Executes 70% of Instruction Set in 1 or 2 System Clocks
- Up to 25MIPS Throughput with 25MHz Clock
- 21 Vectored Interrupt Sources

MEMORY
- 256 Bytes Internal Data RAM (F000/01/02/10/11/12)
- 2304 Bytes Internal Data RAM (F005/06/07/15/16/17)
- 32k Bytes FLASH; In-System Programmable in 512 byte Sectors

DIGITAL PERIPHERALS
- 4 Byte-Wide Port I/O; All are 5V tolerant
- Hardware SMBus™ (I2C™ Compatible), SPI™, and UART Serial Ports Available Concurrently
- Programmable 16-bit Counter/Timer Array with Five Capture/Compare Modules
- Four General Purpose 16-bit Counter/Timers
- Dedicated Watch-Dog Timer
- Bi-directional Reset

CLOCK SOURCES
- Internal Programmable Oscillator: 2-to-16MHz
- External Oscillator: Crystal, RC,C, or Clock
- Can Switch Between Clock Sources on-the-fly; Useful in Power Saving Modes

SUPPLY VOLTAGE ..... 2.7V to 3.6V
- Typical Operating Current: 12.5mA @ 25MHz
- Multiple Power Saving Sleep and Shutdown Modes

64-Pin TQFP, 48-Pin TQFP, 32-Pin LQFP

Temperature Range: –40°C to +85°C

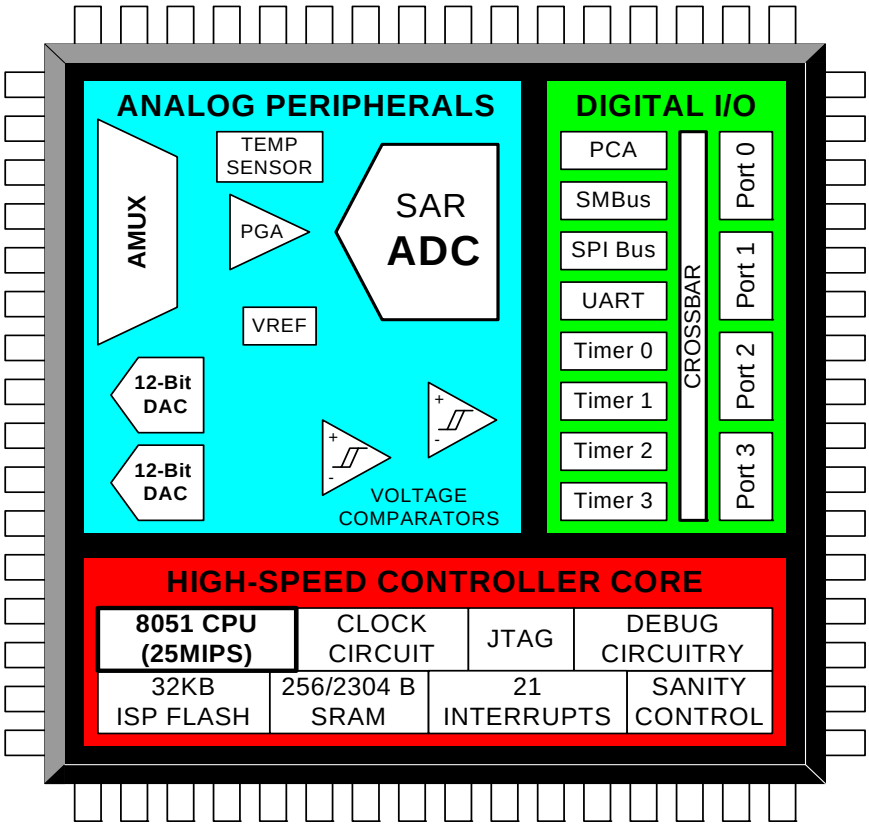

Copyright © 2003 by Silicon Laboratories

TABLE OF CONTENTS

1. SYSTEM OVERVIEW 8
Table 1.1. Product Selection Guide 8
Figure 1.1. C8051F000/05/10/15 Block Diagram 9
Figure 1.2. C8051F001/06/11/16 Block Diagram 10
Figure 1.3. C8051F002/07/12/17 Block Diagram 11
1.1. CIP-51™ CPU 12
Figure 1.4. Comparison of Peak MCU Execution Speeds 12
Figure 1.5. On-Board Clock and Reset 13
1.2. On-Board Memory 14
Figure 1.6. On-Board Memory Map 14
1.3. JTAG Debug and Boundary Scan 15
Figure 1.7. Debug Environment Diagram 15
1.4. Programmable Digital I/O and Crossbar 16
Figure 1.8. Digital Crossbar Diagram 16
1.5. Programmable Counter Array 17
Figure 1.9. PCA Block Diagram 17
1.6. Serial Ports 17
1.7. Analog to Digital Converter 18
Figure 1.10. ADC Diagram 18
1.8. Comparators and DACs 19
Figure 1.11. Comparator and DAC Diagram 19
2. ABSOLUTE MAXIMUM RATINGS* 20
3. GLOBAL DC ELECTRICAL CHARACTERISTICS 20
4. PINOUT AND PACKAGE DEFINITIONS 21
Table 4.1. Pin Definitions 21
Figure 4.1. TQFP-64 Pinout Diagram 23
Figure 4.2. TQFP-64 Package Drawing 24
Figure 4.3. TQFP-48 Pinout Diagram 25
Figure 4.4. TQFP-48 Package Drawing 26
Figure 4.5. LQFP-32 Pinout Diagram 27
Figure 4.6. LQFP-32 Package Drawing 28
5. ADC (12-Bit, C8051F000/1/2/5/6/7 Only) 29
Figure 5.1. 12-Bit ADC Functional Block Diagram 29
5.1. Analog Multiplexer and PGA 29
5.2. ADC Modes of Operation 30
Figure 5.2. 12-Bit ADC Track and Conversion Example Timing 30
Figure 5.3. Temperature Sensor Transfer Function 31
Figure 5.4. AMX0CF: AMUX Configuration Register (C8051F00x) 31
Figure 5.5. AMX0SL: AMUX Channel Select Register (C8051F00x) 32
Figure 5.6. ADC0CF: ADC Configuration Register (C8051F00x) 33
Figure 5.7. ADC0CN: ADC Control Register (C8051F00x) 34
Figure 5.8. ADC0H: ADC Data Word MSB Register (C8051F00x) 35
Figure 5.9. ADC0L: ADC Data Word LSB Register (C8051F00x) 35
5.3. ADC Programmable Window Detector 36
Figure 5.10. ADC0GTH: ADC Greater-Than Data High Byte Register (C8051F00x) 36
Figure 5.11. ADC0GTL: ADC Greater-Than Data Low Byte Register (C8051F00x) 36
Figure 5.12. ADC0LTH: ADC Less-Than Data High Byte Register (C8051F00x) 36
Figure 5.13. ADC0LTL: ADC Less-Than Data Low Byte Register (C8051F00x) 36
Figure 5.14. 12-Bit ADC Window Interrupt Examples, Right Justified Data 37
Figure 5.15. 12-Bit ADC Window Interrupt Examples, Left Justified Data 37
Figure 5.15. 12-Bit ADC Window Interrupt Examples, Left Justified Data 38

Table 5.1. 12-Bit ADC Electrical Characteristics....38
Table 5.1. 12-Bit ADC Electrical Characteristics....39
6. ADC (10-Bit, C8051F010/1/2/5/6/7 Only)....40
Figure 6.1. 10-Bit ADC Functional Block Diagram....40
6.1. Analog Multiplexer and PGA....40
6.2. ADC Modes of Operation....41
Figure 6.2. 10-Bit ADC Track and Conversion Example Timing....41
Figure 6.3. Temperature Sensor Transfer Function....42
Figure 6.4. AMX0CF: AMUX Configuration Register (C8051F01x)....42
Figure 6.5. AMX0SL: AMUX Channel Select Register (C8051F01x)....43
Figure 6.6. ADC0CF: ADC Configuration Register (C8051F01x)....44
Figure 6.7. ADC0CN: ADC Control Register (C8051F01x)....45
Figure 6.8. ADC0H: ADC Data Word MSB Register (C8051F01x)....46
Figure 6.9. ADC0L: ADC Data Word LSB Register (C8051F01x)....46
6.3. ADC Programmable Window Detector....47
Figure 6.10. ADC0GTH: ADC Greater-Than Data High Byte Register (C8051F01x)....47
Figure 6.11. ADC0GTL: ADC Greater-Than Data Low Byte Register (C8051F01x)....47
Figure 6.12. ADC0LTH: ADC Less-Than Data High Byte Register (C8051F01x)....47
Figure 6.13. ADC0LTL: ADC Less-Than Data Low Byte Register (C8051F01x)....47
Figure 6.14. 10-Bit ADC Window Interrupt Examples, Right Justified Data....48
Figure 6.15. 10-Bit ADC Window Interrupt Examples, Left Justified Data....48
Figure 6.15. 10-Bit ADC Window Interrupt Examples, Left Justified Data....49
Table 6.1. 10-Bit ADC Electrical Characteristics....49
Table 6.1. 10-Bit ADC Electrical Characteristics....50
7. DACs, 12 BIT VOLTAGE MODE....51
Figure 7.1. DAC Functional Block Diagram....51
Figure 7.2. DAC0H: DAC0 High Byte Register....52
Figure 7.3. DAC0L: DAC0 Low Byte Register....52
Figure 7.4. DAC0CN: DAC0 Control Register....52
Figure 7.5. DAC1H: DAC1 High Byte Register....53
Figure 7.6. DAC1L: DAC1 Low Byte Register....53
Figure 7.7. DAC1CN: DAC1 Control Register....53
Table 7.1. DAC Electrical Characteristics....54
8. COMPARATORS....55
Figure 8.1. Comparator Functional Block Diagram....55
Figure 8.2. Comparator Hysteresis Plot....56
Figure 8.3. CPT0CN: Comparator 0 Control Register....57
Figure 8.4. CPT1CN: Comparator 1 Control Register....58
Table 8.1. Comparator Electrical Characteristics....59
9. VOLTAGE REFERENCE....60
Figure 9.1. Voltage Reference Functional Block Diagram....60
Figure 9.2. REF0CN: Reference Control Register....61
Table 9.1. Reference Electrical Characteristics....61
10. CIP-51 CPU....62
Figure 10.1. CIP-51 Block Diagram....62
10.1. INSTRUCTION SET....63
Table 10.1. CIP-51 Instruction Set Summary....65
10.2. MEMORY ORGANIZATION....68
Figure 10.2. Memory Map....69
10.3. SPECIAL FUNCTION REGISTERS....70
Table 10.2. Special Function Register Memory Map....70
Table 10.3. Special Function Registers....70
Figure 10.3. SP: Stack Pointer....74
Figure 10.4. DPL: Data Pointer Low Byte....74

Figure 10.5. DPH: Data Pointer High Byte 74
Figure 10.6. PSW: Program Status Word 75
Figure 10.7. ACC: Accumulator 76
Figure 10.8. B: B Register 76
10.4. INTERRUPT HANDLER 77
Table 10.4. Interrupt Summary 78
Figure 10.9. IE: Interrupt Enable 79
Figure 10.10. IP: Interrupt Priority 80
Figure 10.11. EIE1: Extended Interrupt Enable 1 81
Figure 10.12. EIE2: Extended Interrupt Enable 2 82
Figure 10.13. EIP1: Extended Interrupt Priority 1 83
Figure 10.14. EIP2: Extended Interrupt Priority 2 84
10.5. Power Management Modes 85
Figure 10.15. PCON: Power Control Register 86
11. FLASH MEMORY 87
11.1. Programming The Flash Memory 87
Table 11.1. FLASH Memory Electrical Characteristics 87
11.2. Non-volatile Data Storage 88
11.3. Security Options 88
Figure 11.1. PSCTL: Program Store RW Control 88
Figure 11.2. Flash Program Memory Security Bytes 89
Figure 11.3. FLACL: Flash Access Limit (C8051F005/06/07/15/16/17 only) 90
Figure 11.4. FLSCL: Flash Memory Timing Prescaler 91
12. EXTERNAL RAM (C8051F005/06/07/15/16/17) 92
Figure 12.1. EMI0CN: External Memory Interface Control 92
13. RESET SOURCES 93
Figure 13.1. Reset Sources Diagram 93
13.1. Power-on Reset 94
13.2. Software Forced Reset 94
Figure 13.2. VDD Monitor Timing Diagram 94
13.3. Power-fail Reset 94
13.4. External Reset 95
13.5. Missing Clock Detector Reset 95
13.6. Comparator 0 Reset 95
13.7. External CNVSTR Pin Reset 95
13.8. Watchdog Timer Reset 95
Figure 13.3. WDTCN: Watchdog Timer Control Register 96
Figure 13.4. RSTSRC: Reset Source Register 97
Table 13.1. Reset Electrical Characteristics 98
14. OSCILLATOR 99
Figure 14.1. Oscillator Diagram 99
Figure 14.2. OSCICN: Internal Oscillator Control Register 100
Table 14.1. Internal Oscillator Electrical Characteristics 100
Figure 14.3. OSCXCN: External Oscillator Control Register 101
14.1. External Crystal Example 102
14.2. External RC Example 102
14.3. External Capacitor Example 102
15. PORT INPUT/OUTPUT 103
15.1. Priority Cross Bar Decoder 103
15.2. Port I/O Initialization 103
Figure 15.1. Port I/O Functional Block Diagram 104
Figure 15.2. Port I/O Cell Block Diagram 104
Table 15.1. Crossbar Priority Decode 105
Figure 15.3. XBR0: Port I/O CrossBar Register 0 106

Figure 15.4. XBR1: Port I/O CrossBar Register 1 107
Figure 15.5. XBR2: Port I/O CrossBar Register 2 108
15.3. General Purpose Port I/O 109
15.4. Configuring Ports Which are not Pinned Out 109
Figure 15.6. P0: Port0 Register 109
Figure 15.7. PRT0CF: Port0 Configuration Register 109
Figure 15.8. P1: Port1 Register 110
Figure 15.9. PRT1CF: Port1 Configuration Register 110
Figure 15.10. PRT1IF: Port1 Interrupt Flag Register 110
Figure 15.11. P2: Port2 Register 111
Figure 15.12. PRT2CF: Port2 Configuration Register 111
Figure 15.13. P3: Port3 Register 112
Figure 15.14. PRT3CF: Port3 Configuration Register 112
Table 15.2. Port I/O DC Electrical Characteristics 112
16. SMBus / I2C Bus 113
Figure 16.1. SMBus Block Diagram 113
Figure 16.2. Typical SMBus Configuration 114
16.1. Supporting Documents 114
16.2. Operation 115
Figure 16.3. SMBus Transaction 115
16.3. Arbitration 116
16.4. Clock Low Extension 116
16.5. Timeouts 116
16.6. SMBus Special Function Registers 116
Figure 16.4. SMB0CN: SMBus Control Register 118
Figure 16.5. SMB0CR: SMBus Clock Rate Register 119
Figure 16.6. SMB0DAT: SMBus Data Register 120
Figure 16.7. SMB0ADR: SMBus Address Register 120
Figure 16.8. SMB0STA: SMBus Status Register 121
Table 16.1. SMBus Status Codes 122
17. SERIAL PERIPHERAL INTERFACE BUS 123
Figure 17.1. SPI Block Diagram 123
Figure 17.2. Typical SPI Interconnection 124
17.1. Signal Descriptions 124
17.2. Operation 125
Figure 17.3. Full Duplex Operation 125
17.3. Serial Clock Timing 126
Figure 17.4. Data/Clock Timing Diagram 126
17.4. SPI Special Function Registers 127
Figure 17.5. SPI0CFG: SPI Configuration Register 127
Figure 17.6. SPI0CN: SPI Control Register 128
Figure 17.7. SPI0CKR: SPI Clock Rate Register 129
Figure 17.8. SPI0DAT: SPI Data Register 129
18. UART 130
Figure 18.1. UART Block Diagram 130
18.1. UART Operational Modes 131
Table 18.1. UART Modes 131
Figure 18.2. UART Mode 0 Interconnect 131
Figure 18.3. UART Mode 0 Timing Diagram 131
Figure 18.4. UART Mode 1 Timing Diagram 132
Figure 18.5. UART Modes 1, 2, and 3 Interconnect Diagram 133
Figure 18.6. UART Modes 2 and 3 Timing Diagram 134
18.2. Multiprocessor Communications 135
Figure 18.7. UART Multi-Processor Mode Interconnect Diagram 135

Table 18.2. Oscillator Frequencies for Standard Baud Rates 136
Figure 18.8. SBUF: Serial (UART) Data Buffer Register....136
Figure 18.9. SCON: Serial Port Control Register....137
19. TIMERS 138
19.1. Timer 0 and Timer 1 138
Figure 19.1. T0 Mode 0 Block Diagram....139
Figure 19.2. T0 Mode 2 Block Diagram....140
Figure 19.3. T0 Mode 3 Block Diagram....141
Figure 19.4. TCON: Timer Control Register....142
Figure 19.5. TMOD: Timer Mode Register....143
Figure 19.6. CKCON: Clock Control Register....144
Figure 19.7. TL0: Timer 0 Low Byte 145
Figure 19.8. TL1: Timer 1 Low Byte 145
Figure 19.9. TH0: Timer 0 High Byte 145
Figure 19.10. TH1: Timer 1 High Byte 145
19.2. Timer 2 146
Figure 19.11. T2 Mode 0 Block Diagram....147
Figure 19.12. T2 Mode 1 Block Diagram....148
Figure 19.13. T2 Mode 2 Block Diagram....149
Figure 19.14. T2CON: Timer 2 Control Register....150
Figure 19.15. RCAP2L: Timer 2 Capture Register Low Byte 151
Figure 19.16. RCAP2H: Timer 2 Capture Register High Byte 151
Figure 19.17. TL2: Timer 2 Low Byte 151
Figure 19.18. TH2: Timer 2 High Byte 151
19.3. Timer 3 152
Figure 19.19. Timer 3 Block Diagram....152
Figure 19.20. TMR3CN: Timer 3 Control Register 152
Figure 19.21. TMR3RLL: Timer 3 Reload Register Low Byte 153
Figure 19.22. TMR3RLH: Timer 3 Reload Register High Byte 153
Figure 19.23. TMR3L: Timer 3 Low Byte 153
Figure 19.24. TMR3H: Timer 3 High Byte....153
20. PROGRAMMABLE COUNTER ARRAY 154
Figure 20.1. PCA Block Diagram 154
20.1. Capture/Compare Modules....155
Table 20.1. PCA0CPM Register Settings for PCA Capture/Compare Modules 155
Figure 20.2. PCA Interrupt Block Diagram....155
Figure 20.3. PCA Capture Mode Diagram 156
Figure 20.4. PCA Software Timer Mode Diagram....157
Figure 20.5. PCA High Speed Output Mode Diagram....157
Figure 20.6. PCA PWM Mode Diagram 158
20.2. PCA Counter/Timer....159
Table 20.2. PCA Timebase Input Options....159
Figure 20.7. PCA Counter/Timer Block Diagram....159
20.3. Register Descriptions for PCA 160
Figure 20.8. PCA0CN: PCA Control Register 160
Figure 20.9. PCA0MD: PCA Mode Register 161
Figure 20.10. PCA0CPMn: PCA Capture/Compare Registers....162
Figure 20.11. PCA0L: PCA Counter/Timer Low Byte 163
Figure 20.12. PCA0H: PCA Counter/Timer High Byte 163
Figure 20.13. PCA0CPLn: PCA Capture Module Low Byte....163
Figure 20.14. PCA0CPHn: PCA Capture Module High Byte....163
21. JTAG (IEEE 1149.1) 164
Figure 21.1. IR: JTAG Instruction Register 164
21.1. Boundary Scan....165

Table 21.1. Boundary Data Register Bit Definitions....165
Figure 21.2. DEVICEID: JTAG Device ID Register....166
21.2. Flash Programming Commands....167
Figure 21.3. FLASHCON: JTAG Flash Control Register....168
Figure 21.4. FLASHADR: JTAG Flash Address Register....168
Figure 21.5. FLASHDAT: JTAG Flash Data Register....169
Figure 21.6. FLASHSCL: JTAG Flash Scale Register....169
21.3. Debug Support....170

1. SYSTEM OVERVIEW

The C8051F000 family are fully integrated mixed-signal System on a Chip MCUs with a true 12-bit multi-channel ADC (F000/01/02/05/06/07), or a true 10-bit multi-channel ADC (F010/11/12/15/16/17). See the Product Selection Guide in Table 1.1 for a quick reference of each MCUs' feature set. Each has a programmable gain pre-amplifier, two 12-bit DACs, two voltage comparators (except for the F002/07/12/17, which have one), a voltage reference, and an 8051-compatible microcontroller core with 32kbytes of FLASH memory. There are also I2C/SMBus, UART, and SPI serial interfaces implemented in hardware (not "bit-banged" in user software) as well as a Programmable Counter/Timer Array (PCA) with five capture/compare modules. There are also 4 general-purpose 16-bit timers and 4 byte-wide general-purpose digital Port I/O. The C8051F000/01/02/10/11/12 have 256 bytes of RAM and execute up to 20MIPS, while the C8051F005/06/07/15/16/17 have 2304 bytes of RAM and execute up to 25MIPS.

With an on-board VDD monitor, WDT, and clock oscillator, the MCUs are truly stand-alone System-on-a-Chip solutions. Each MCU effectively configures and manages the analog and digital peripherals. The FLASH memory can be reprogrammed even in-circuit, providing non-volatile data storage, and also allowing field upgrades of the 8051 firmware. Each MCU can also individually shut down any or all of the peripherals to conserve power.

On-board JTAG debug support allows non-intrusive (uses no on-chip resources), full speed, in-circuit debug using the production MCU installed in the final application. This debug system supports inspection and modification of memory and registers, setting breakpoints, watchpoints, single stepping, and run and halt commands. All analog and digital peripherals are fully functional when using JTAG debug.

Each MCU is specified for 2.7V-to-3.6V operation over the industrial temperature range (-45C to +85C). The Port I/Os, /RST, and JTAG pins are tolerant for input signals up to 5V. The C8051F000/05/10/15 are available in the 64-pin TQFP (see block diagram in Figure 1.1). The C8051F001/06/11/16 are available in the 48-pin TQFP (see block diagram in Figure 1.2). The C8051F002/07/12/17 are available in the 32-pin LQFP (see block diagram in Figure 1.3).

Table 1.1. Product Selection Guide

	MIPS (Peak)	FLASH Memory	RAM	SMBus/I2C	SPI	UART	Timers (16-bit)	Programmable Counter Array	Digital Port I/O's	ADC Resolution (bits)	ADC Max Speed (ksps)	ADC Inputs	Voltage Reference	Temperature Sensor	DAC Resolution	DAC Outputs	Voltage Comparators	Package
C8051F000	20	32k	256	√	√	√	4	√	32	12	100	8	√	√	12	2	2	64TQFP
C8051F001	20	32k	256	√	√	√	4	√	16	12	100	8	√	√	12	2	2	48TQFP
C8051F002	20	32k	256	√	√	√	4	√	8	12	100	4	√	√	12	2	1	32LQFP
C8051F005	25	32k	2304	√	√	√	4	√	32	12	100	8	√	√	12	2	2	64TQFP
C8051F006	25	32k	2304	√	√	√	4	√	16	12	100	8	√	√	12	2	2	48TQFP
C8051F007	25	32k	2304	√	√	√	4	√	8	12	100	4	√	√	12	2	1	32LQFP
C8051F010	20	32k	256	√	√	√	4	√	32	10	100	8	√	√	12	2	2	64TQFP
C8051F011	20	32k	256	√	√	√	4	√	16	10	100	8	√	√	12	2	2	48TQFP
C8051F012	20	32k	256	√	√	√	4	√	8	10	100	4	√	√	12	2	1	32LQFP
C8051F015	25	32k	2304	√	√	√	4	√	32	10	100	8	√	√	12	2	2	64TQFP
C8051F016	25	32k	2304	√	√	√	4	√	16	10	100	8	√	√	12	2	2	48TQFP
C8051F017	25	32k	2304	√	√	√	4	√	8	10	100	4	√	√	12	2	1	32LQFP

Figure 1.1. C8051F000/05/10/15 Block Diagram

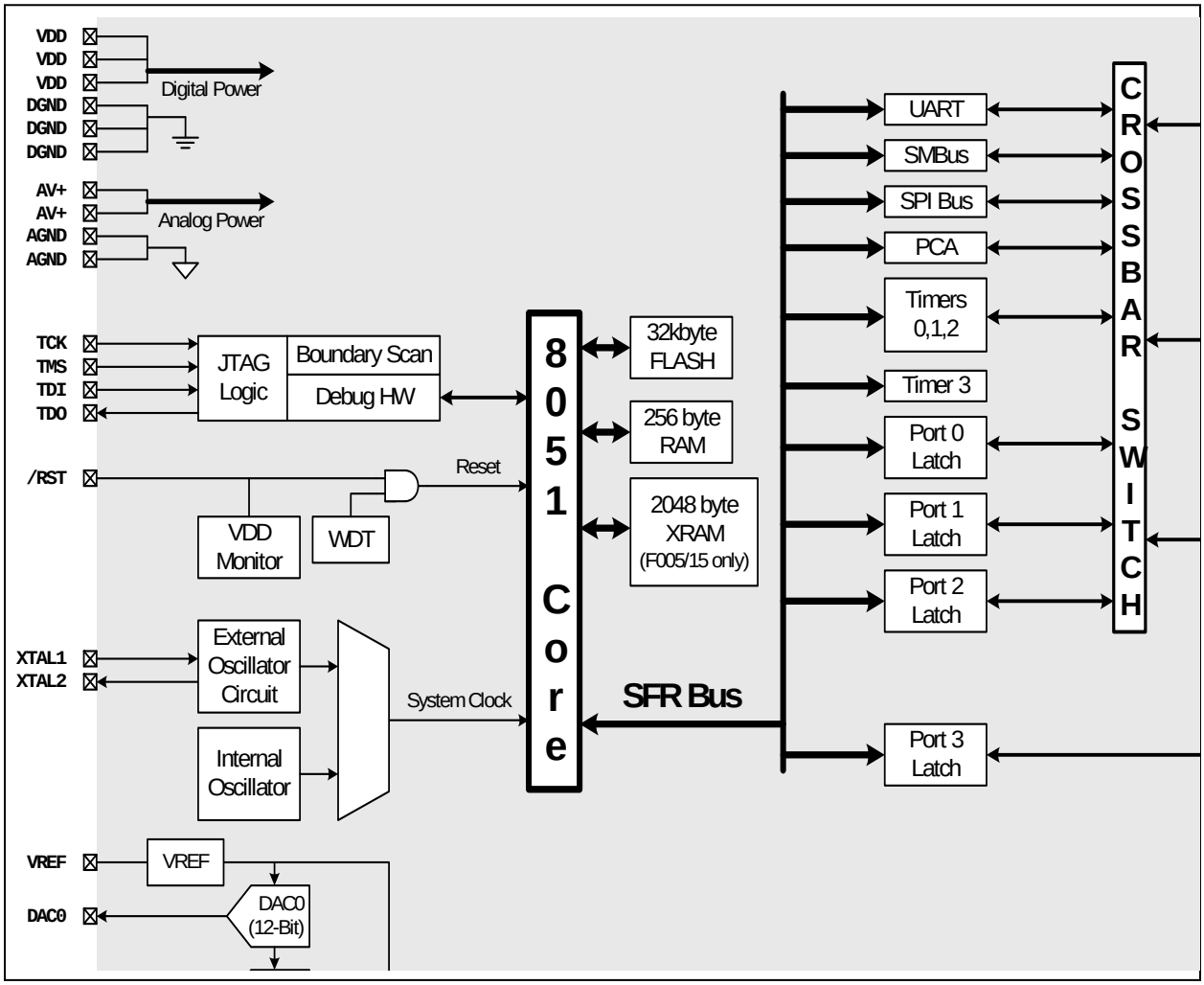

Figure 1.2. C8051F001/06/11/16 Block Diagram

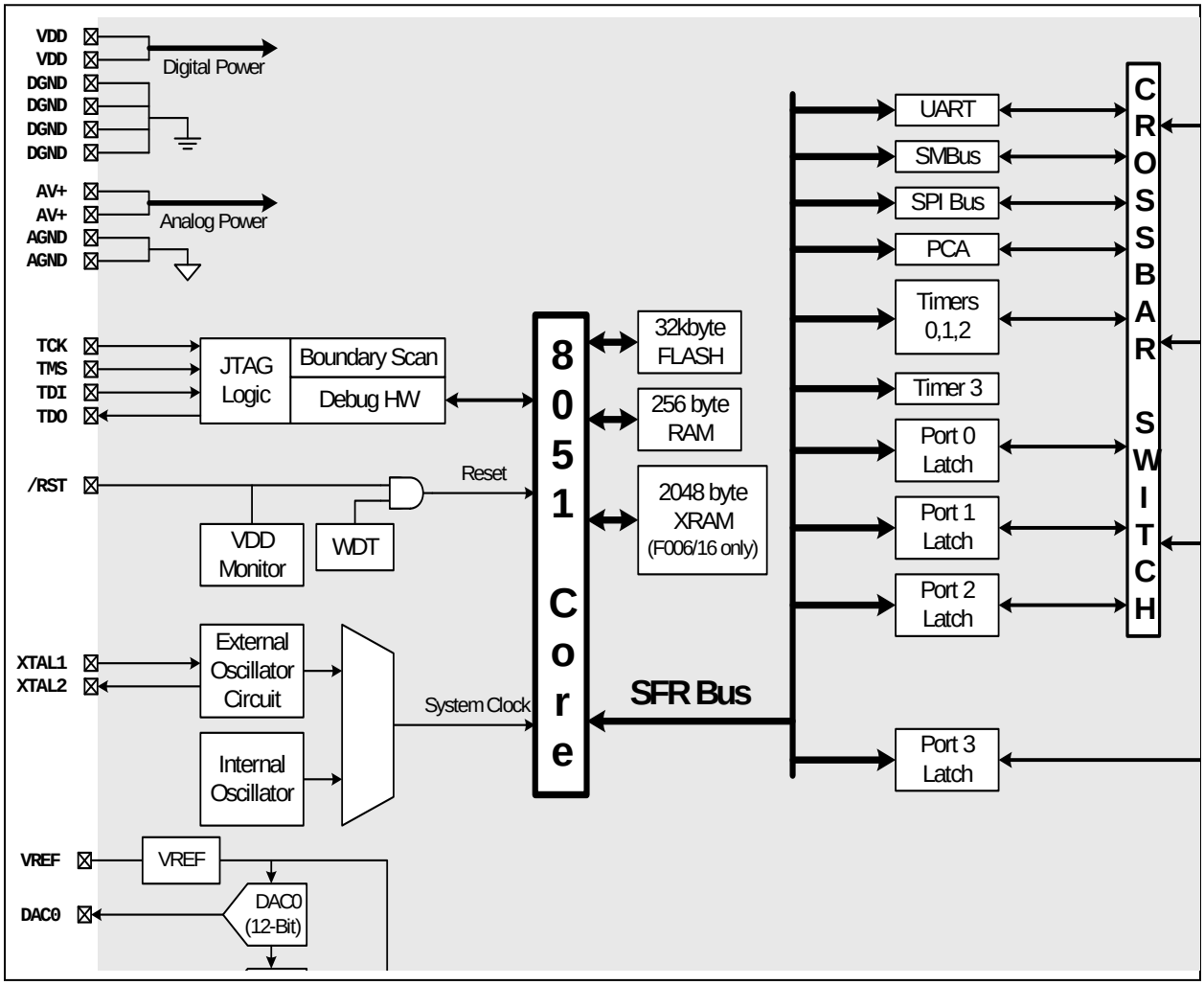

Figure 1.3. C8051F002/07/12/17 Block Diagram

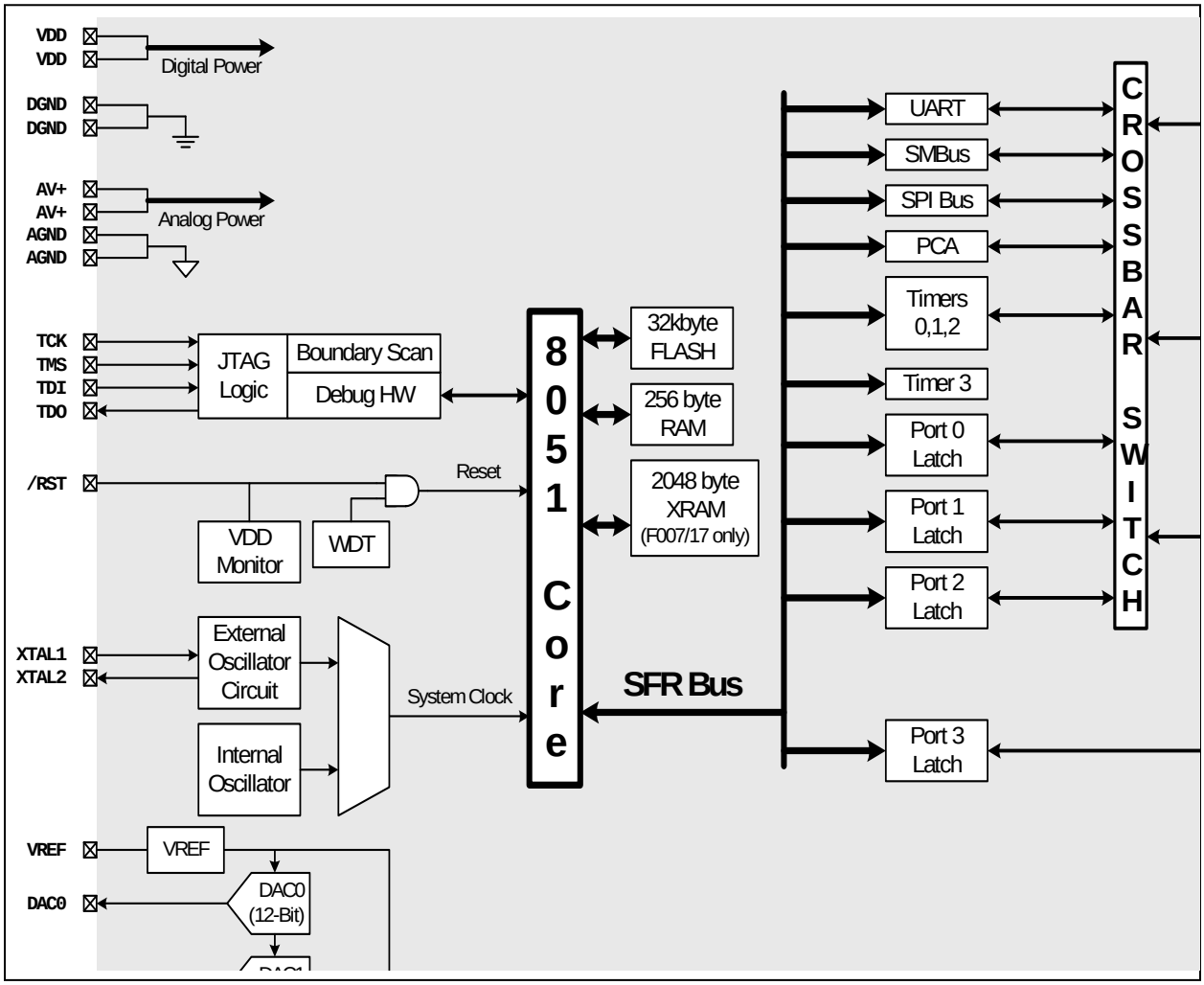

1.1. CIP-51™ CPU

1.1.1. Fully 8051 Compatible

The C8051F000 family utilizes Silicon Laboratories' proprietary CIP-51 microcontroller core. The CIP-51 is fully compatible with the MCS-51™ instruction set. Standard 803x/805x assemblers and compilers can be used to develop software. The core has all the peripherals included with a standard 8052, including four 16-bit counter/timers, a full-duplex UART, 256 bytes of internal RAM space, 128 byte Special Function Register (SFR) address space, and four byte-wide I/O Ports.

1.1.2. Improved Throughput

The CIP-51 employs a pipelined architecture that greatly increases its instruction throughput over the standard 8051 architecture. In a standard 8051, all instructions except for MUL and DIV take 12 or 24 system clock cycles to execute with a maximum system clock of 12-to-24MHz. By contrast, the CIP-51 core executes 70% of its instructions in one or two system clock cycles, with only four instructions taking more than four system clock cycles.

The CIP-51 has a total of 109 instructions. The number of instructions versus the system clock cycles to execute them is as follows:

Instructions	26	50	5	14	7	3	1	2	1
Clocks to Execute	1	2	2/3	3	3/4	4	4/5	5	8

With the CIP-51's maximum system clock at 25MHz, it has a peak throughput of 25MIPS. Figure 1.4 shows a comparison of peak throughputs of various 8-bit microcontroller cores with their maximum system clocks.

Figure 1.4. Comparison of Peak MCU Execution Speeds

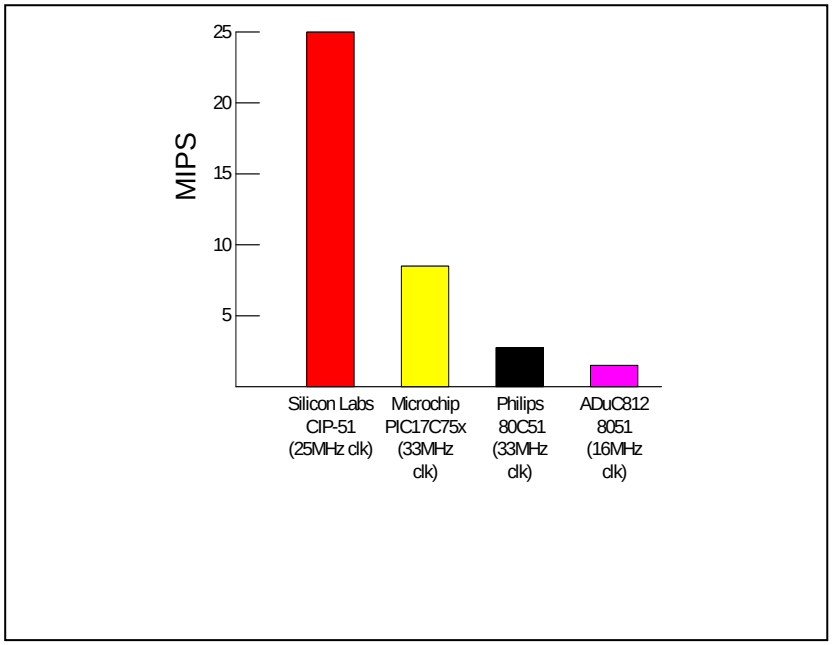

1.1.3. Additional Features

The C8051F000 MCU family has several key enhancements both inside and outside the CIP-51 core to improve its overall performance and ease of use in the end applications.

The extended interrupt handler provides 21 interrupt sources into the CIP-51 (as opposed to 7 for the standard 8051), allowing the numerous analog and digital peripherals to interrupt the controller. An interrupt driven system requires less intervention by the MCU, giving it more effective throughput. The extra interrupt sources are very useful when building multi-tasking, real-time systems.

There are up to seven reset sources for the MCU: an on-board VDD monitor, a Watchdog Timer, a missing clock detector, a voltage level detection from Comparator 0, a forced software reset, the CNVSTR pin, and the /RST pin. The /RST pin is bi-directional, accommodating an external reset, or allowing the internally generated POR to be output on the /RST pin. Each reset source except for the VDD monitor and Reset Input Pin may be disabled by the user in software. The WDT may be permanently enabled in software after a power-on reset during MCU initialization.

The MCU has an internal, stand alone clock generator which is used by default as the system clock after any reset. If desired, the clock source may be switched on the fly to the external oscillator, which can use a crystal, ceramic resonator, capacitor, RC, or external clock source to generate the system clock. This can be extremely useful in low power applications, allowing the MCU to run from a slow (power saving) external crystal source, while periodically switching to the fast (up to 16MHz) internal oscillator as needed.

Figure 1.5. On-Board Clock and Reset

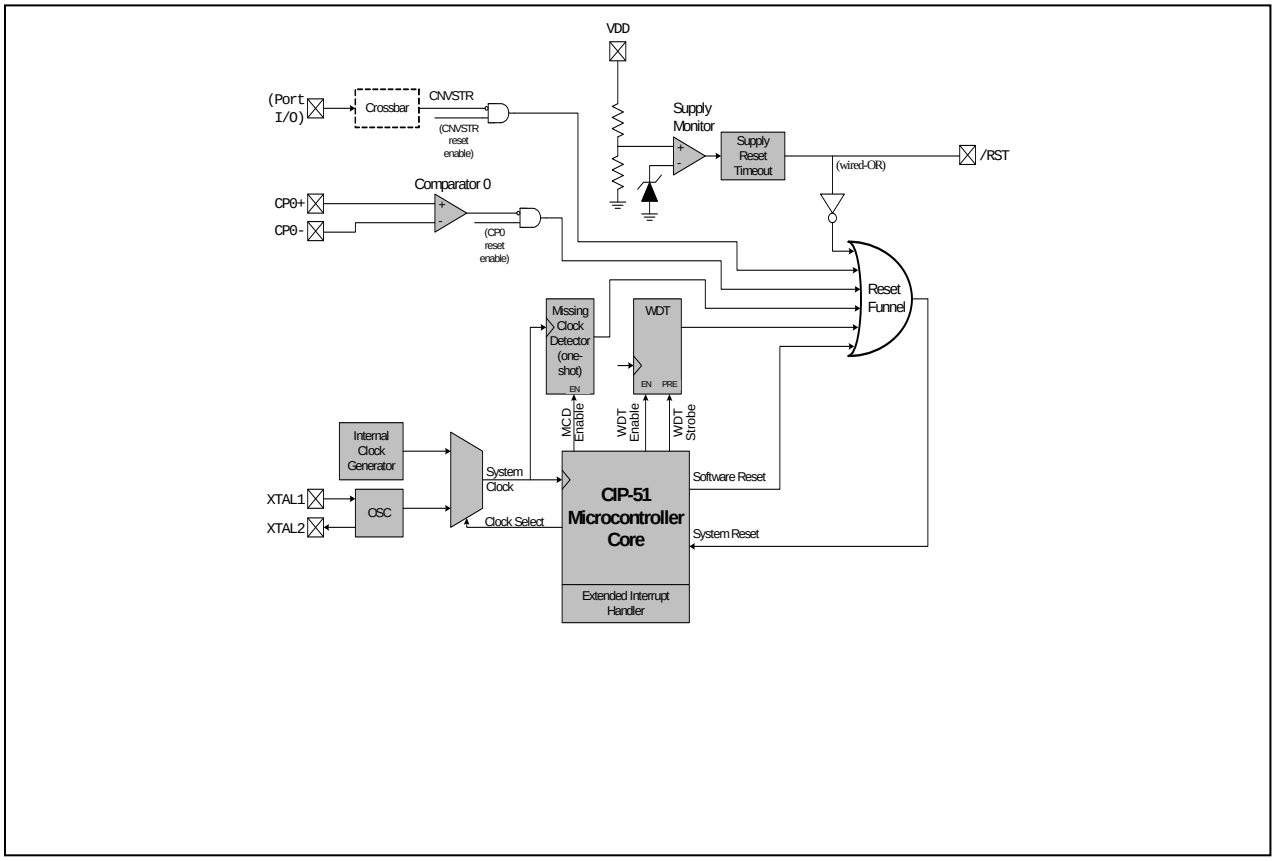

1.2. On-Board Memory

The CIP-51 has a standard 8051 program and data address configuration. It includes 256 bytes of data RAM, with the upper 128 bytes dual-mapped. Indirect addressing accesses the upper 128 bytes of general purpose RAM, and direct addressing accesses the 128 byte SFR address space. The lower 128 bytes of RAM are accessible via direct and indirect addressing. The first 32 bytes are addressable as four banks of general-purpose registers, and the next 16 bytes can be byte addressable or bit addressable.

The CIP-51 in the C8051F005/06/07/15/16/17 MCUs additionally has a 2048 byte RAM block in the external data memory address space. This 2048 byte block can be addressed over the entire 64k external data memory address range (see Figure 1.6).

The MCU's program memory consists of 32k + 128 bytes of FLASH. This memory may be reprogrammed in-system in 512 byte sectors, and requires no special off-chip programming voltage. The 512 bytes from addresses 0x7E00 to 0x7FFF are reserved for factory use. There is also a single 128-byte sector at address 0x8000 to 0x807F, which may be useful as a small table for software constants or as additional program space. See Figure 1.6 for the MCU system memory map.

Figure 1.6. On-Board Memory Map

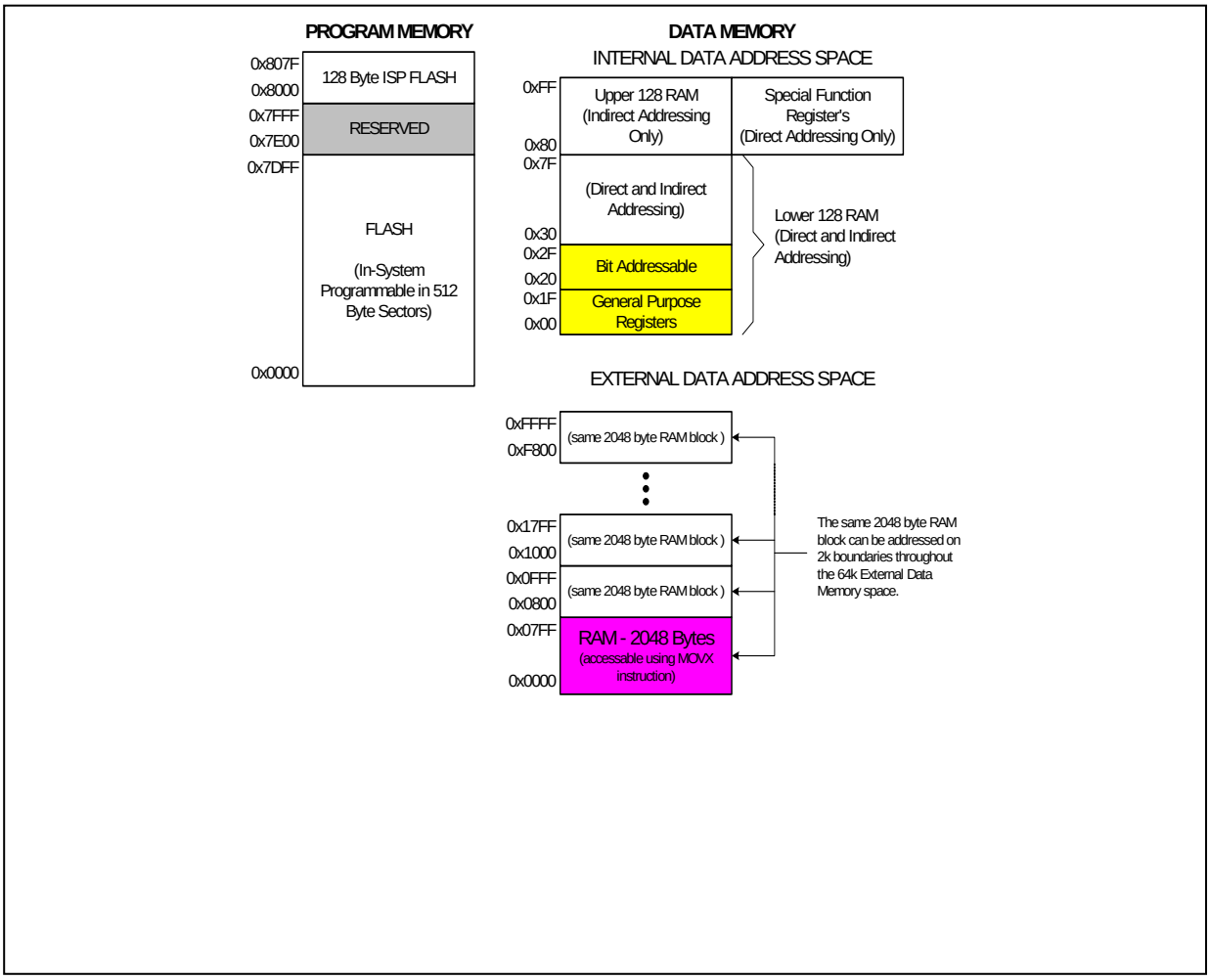

1.3. JTAG Debug and Boundary Scan

The C8051F000 family has on-chip JTAG and debug circuitry that provide *non-intrusive, full speed, in-circuit debug using the production part installed in the end application* using the four-pin JTAG I/F. The JTAG port is fully compliant to IEEE 1149.1, providing full boundary scan for test and manufacturing purposes.

Silicon Labs' debug system supports inspection and modification of memory and registers, breakpoints, watchpoints, a stack monitor, and single stepping. No additional target RAM, program memory, timers, or communications channels are required. All the digital and analog peripherals are functional and work correctly while debugging. All the peripherals (except for the ADC) are stalled when the MCU is halted, during single stepping, or at a breakpoint in order to keep them in sync.

The C8051F000DK, C8051F005DK, C8051F010DK, and C8051F015DK are development kits with all the hardware and software necessary to develop application code and perform in-circuit debug with the C8051F000/1/2, F005/6/7, F010/1/2, and F015/6/7 MCUs respectively. The kit includes software with a developer's studio and debugger, an integrated 8051 assembler, and an RS-232 to JTAG protocol translator module referred to as the EC. It also has a target application board with the associated MCU installed and a large prototyping area, plus the RS-232 and JTAG cables, and wall-mount power supply. The Development Kit requires a Windows 95/98/NT/2000/XP computer with one available RS-232 serial port. As shown in Figure 1.7, the PC is connected via RS-232 to the EC. A six-inch ribbon cable connects the EC to the user's application board, picking up the four JTAG pins and VDD and GND. The EC takes its power from the application board. It requires roughly 20mA at 2.7-3.6V. For applications where there is not sufficient power available from the target board, the provided power supply can be connected directly to the EC.

This is a vastly superior configuration for developing and debugging embedded applications compared to standard MCU Emulators, which use on-board "ICE Chips" and target cables and require the MCU in the application board to be socketed. Silicon Labs' debug environment both increases ease of use and preserves the performance of the precision analog peripherals.

Figure 1.7. Debug Environment Diagram

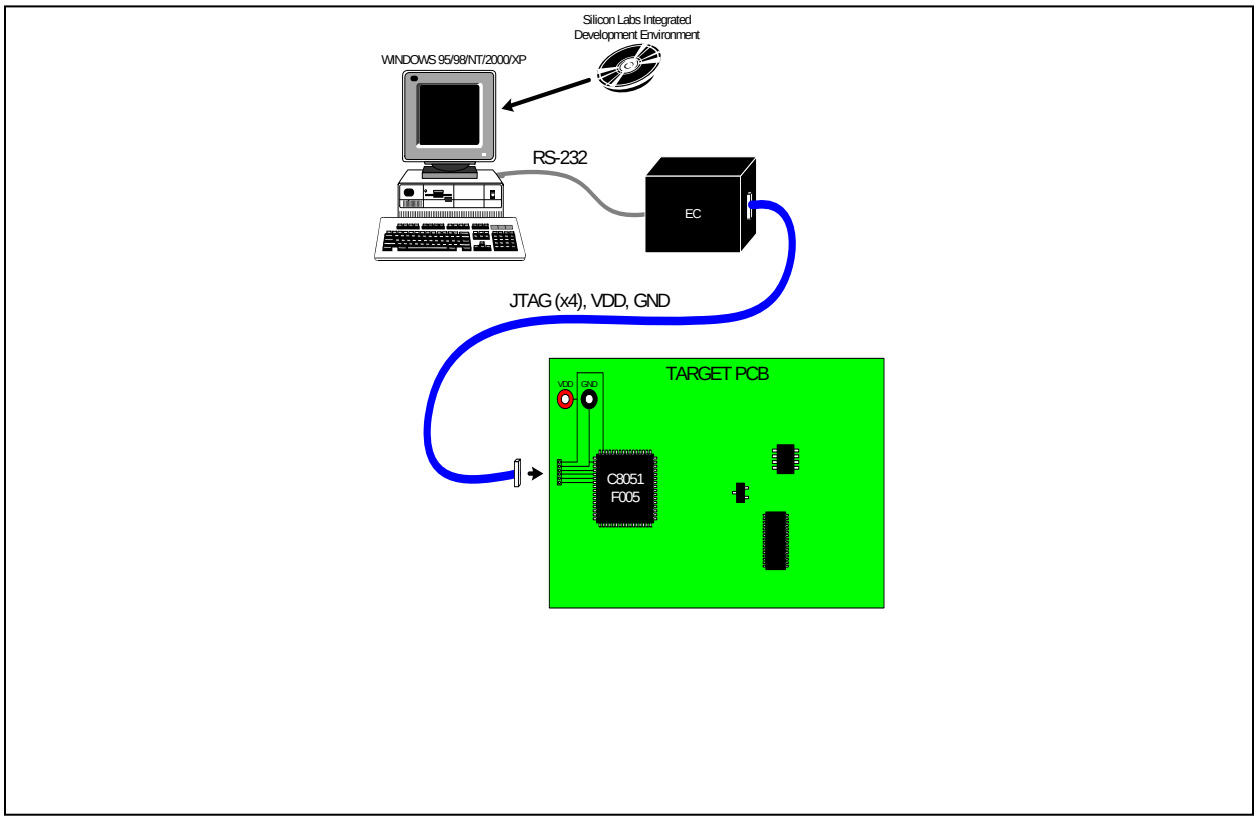

1.4. Programmable Digital I/O and Crossbar

The standard 8051 Ports (0, 1, 2, and 3) are available on the MCUs. All four ports are pinned out on the F000/05/10/15. Ports 0 and 1 are pinned out on the F001/06/11/16, and only Port 0 is pinned out on the F002/07/12/17. The Ports not pinned out are still available for software use as general purpose registers. The Port I/O behave like the standard 8051 with a few enhancements.

Each Port I/O pin can be configured as either a push-pull or open-drain output. Also, the "weak pull-ups" which are normally fixed on an 8051 can be globally disabled, providing additional power saving capabilities for low power applications.

Perhaps the most unique enhancement is the Digital Crossbar. This is essentially a large digital switching network that allows mapping of internal digital system resources to Port I/O pins on P0, P1, and P2. (See Figure 1.8.) Unlike microcontrollers with standard multiplexed digital I/O, all combinations of functions are supported.

The on-board counter/timers, serial buses, HW interrupts, ADC Start of Conversion input, comparator outputs, and other digital signals in the controller can be configured to appear on the Port I/O pins specified in the Crossbar Control registers. This allows the user to select the exact mix of general purpose Port I/O and digital resources needed for his particular application.

Figure 1.8. Digital Crossbar Diagram

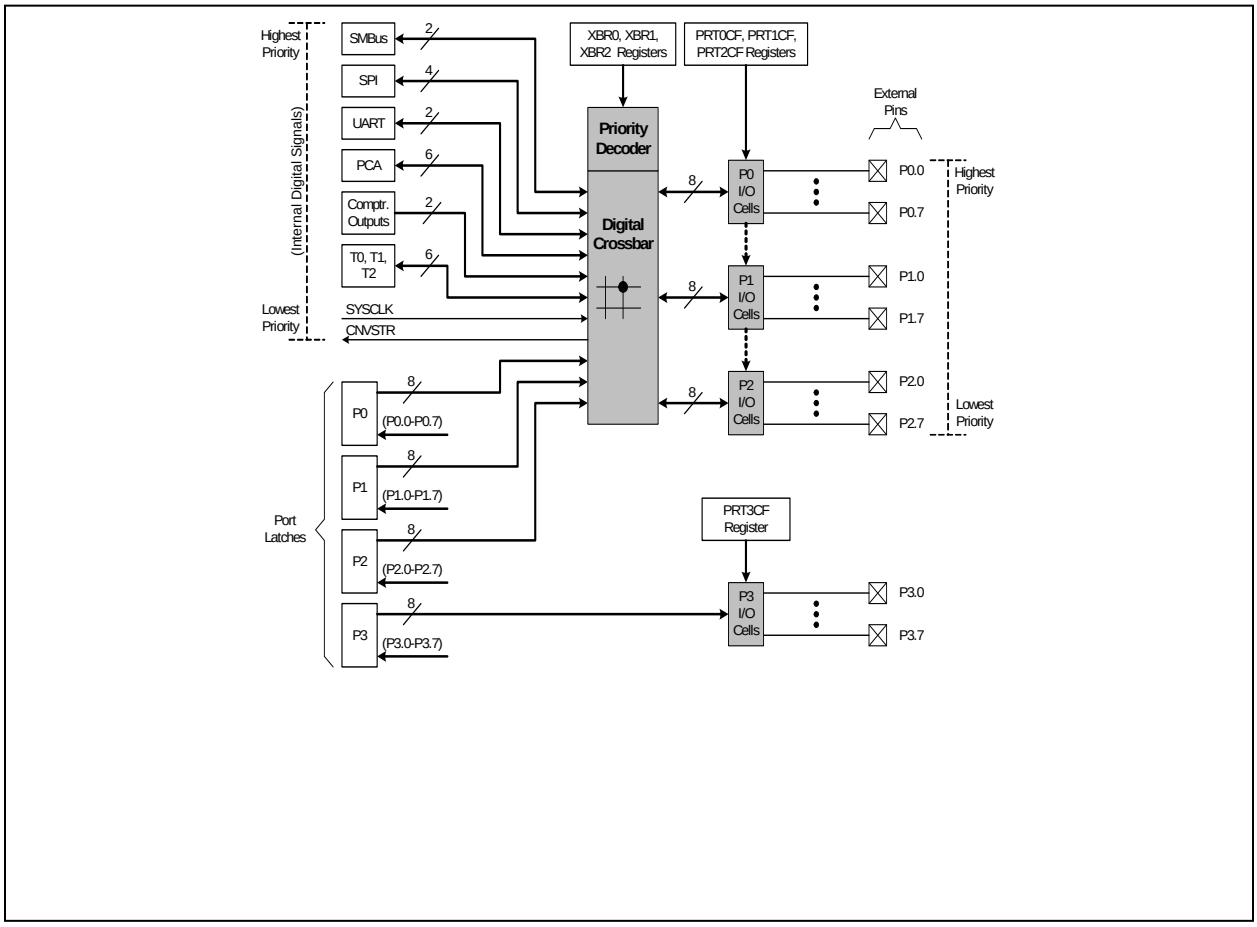

1.5. Programmable Counter Array

The C8051F000 MCU family has an on-board Programmable Counter/Timer Array (PCA) in addition to the four 16-bit general-purpose counter/timers. The PCA consists of a dedicated 16-bit counter/timer timebase with 5 programmable capture/compare modules. The timebase gets its clock from one of four sources: the system clock divided by 12, the system clock divided by 4, Timer 0 overflow, or an External Clock Input (ECI).

Each capture/compare module can be configured to operate in one of four modes: Edge-Triggered Capture, Software Timer, High Speed Output, or Pulse Width Modulator. The PCA Capture/Compare Module I/O and External Clock Input are routed to the MCU Port I/O via the Digital Crossbar.

Figure 1.9. PCA Block Diagram

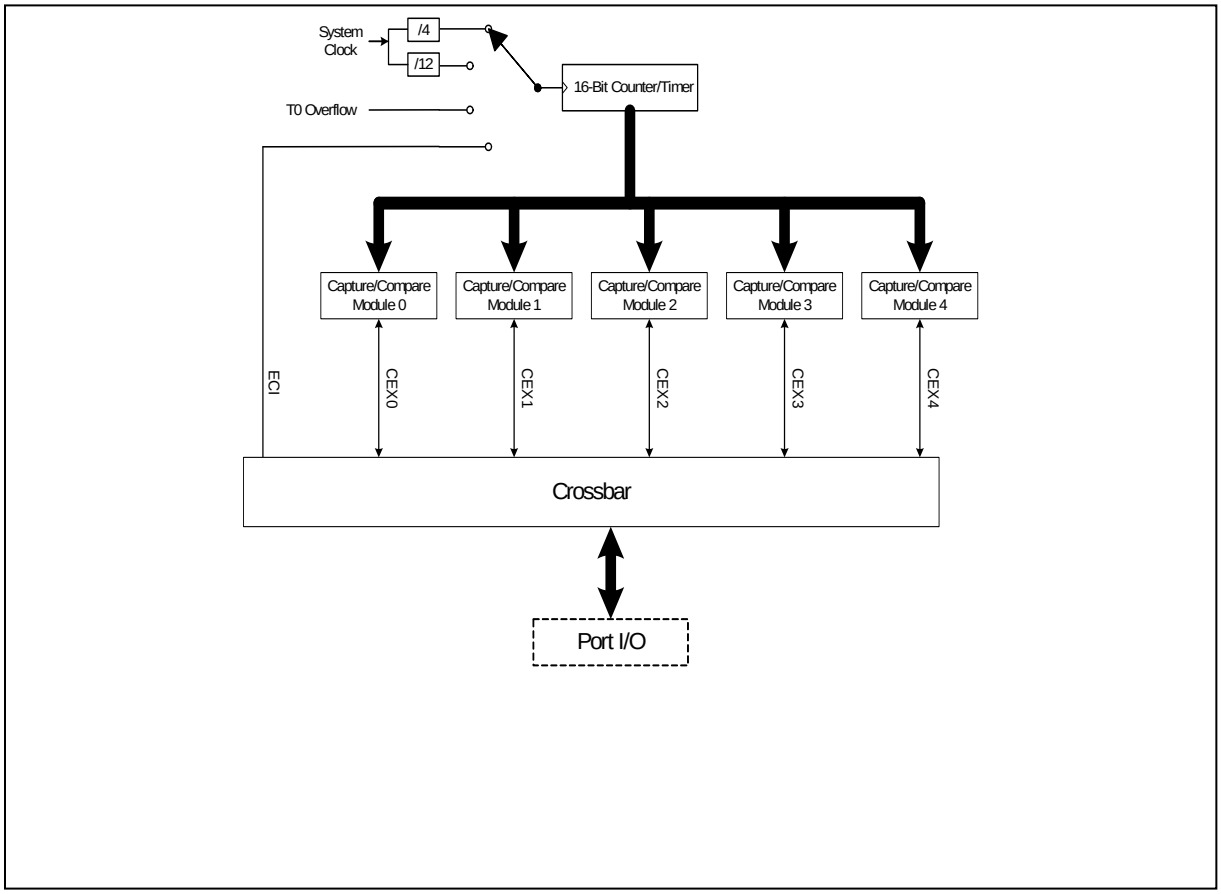

1.6. Serial Ports

The C8051F000 MCU Family includes a Full-Duplex UART, SPI Bus, and I2C/SMBus. Each of the serial buses is fully implemented in hardware and makes extensive use of the CIP-51's interrupts, thus requiring very little intervention by the CPU. The serial buses do not "share" resources such as timers, interrupts, or Port I/O, so any or all of the serial buses may be used together.

1.7. Analog to Digital Converter

The C8051F000/1/2/5/6/7 has an on-chip 12-bit SAR ADC with a 9-channel input multiplexer and programmable gain amplifier. With a maximum throughput of 100ksps, the ADC offers true 12-bit accuracy with an INL of ±1LSB. The ADC in the C8051F010/1/2/5/6/7 is similar, but with 10-bit resolution. Each ADC has a maximum throughput of 100ksps. Each ADC has an INL of ±1LSB, offering true 12-bit accuracy with the C8051F00x, and true 10-bit accuracy with the C8051F01x. There is also an on-board 15ppm voltage reference, or an external reference may be used via the VREF pin.

The ADC is under full control of the CIP-51 microcontroller via the Special Function Registers. One input channel is tied to an internal temperature sensor, while the other eight channels are available externally. Each pair of the eight external input channels can be configured as either two single-ended inputs or a single differential input. The system controller can also put the ADC into shutdown to save power.

A programmable gain amplifier follows the analog multiplexer. The gain can be set in software from 0.5 to 16 in powers of 2. The gain stage can be especially useful when different ADC input channels have widely varied input voltage signals, or when it is necessary to "zoom in" on a signal with a large DC offset (in differential mode, a DAC could be used to provide the DC offset).

Conversions can be started in four ways; a software command, an overflow on Timer 2, an overflow on Timer 3, or an external signal input. This flexibility allows the start of conversion to be triggered by software events, external HW signals, or convert continuously. A completed conversion causes an interrupt, or a status bit can be polled in software to determine the end of conversion. The resulting 10 or 12-bit data word is latched into two SFRs upon completion of a conversion. The data can be right or left justified in these registers under software control.

Compare registers for the ADC data can be configured to interrupt the controller when ADC data is within a specified window. The ADC can monitor a key voltage continuously in background mode, but not interrupt the controller unless the converted data is within the specified window.

Figure 1.10. ADC Diagram

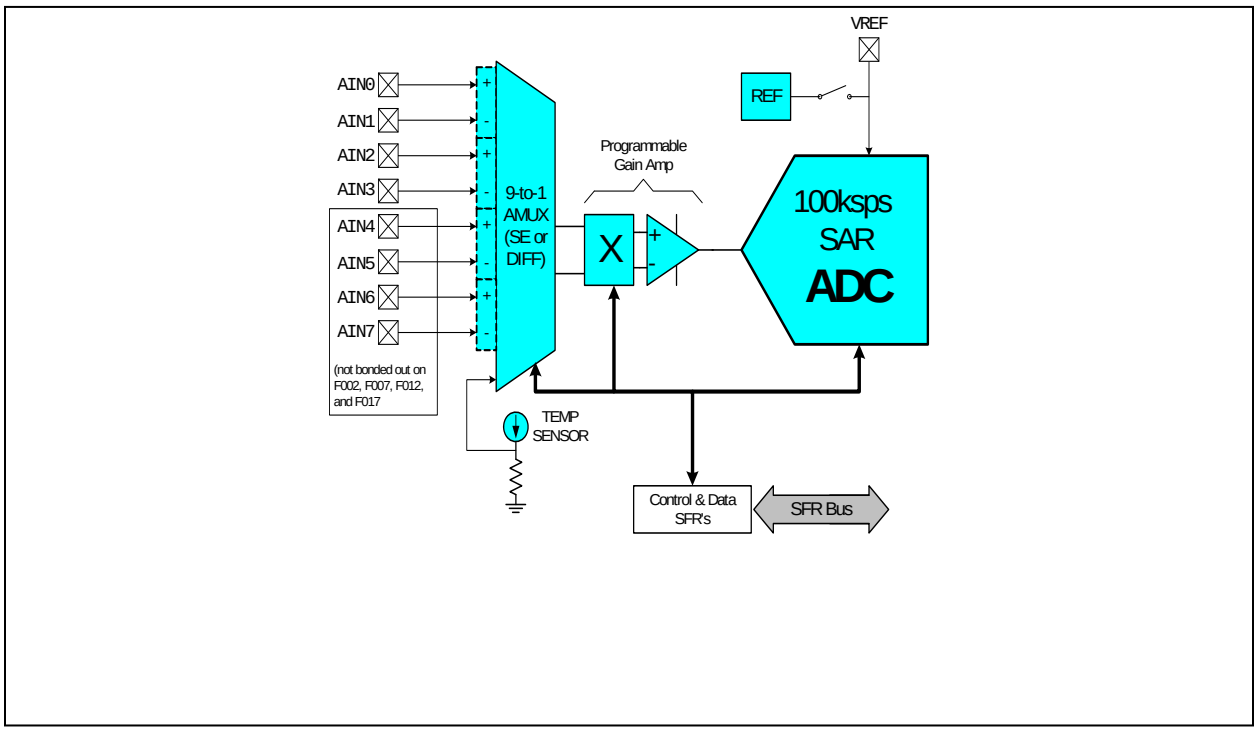

1.8. Comparators and DACs

The C8051F000 MCU Family has two 12-bit DACs and two comparators on chip (the second comparator, CP1, is not bonded out on the F002, F007, F012, and F017). The MCU data and control interface to each comparator and DAC is via the Special Function Registers. The MCU can place any DAC or comparator in low power shutdown mode.

The comparators have software programmable hysteresis. Each comparator can generate an interrupt on its rising edge, falling edge, or both. The comparators' output state can also be polled in software. These interrupts are capable of waking up the MCU from idle mode. The comparator outputs can be programmed to appear on the Port I/O pins via the Crossbar.

The DACs are voltage output mode and use the same voltage reference as the ADC. They are especially useful as references for the comparators or offsets for the differential inputs of the ADC.

Figure 1.11. Comparator and DAC Diagram

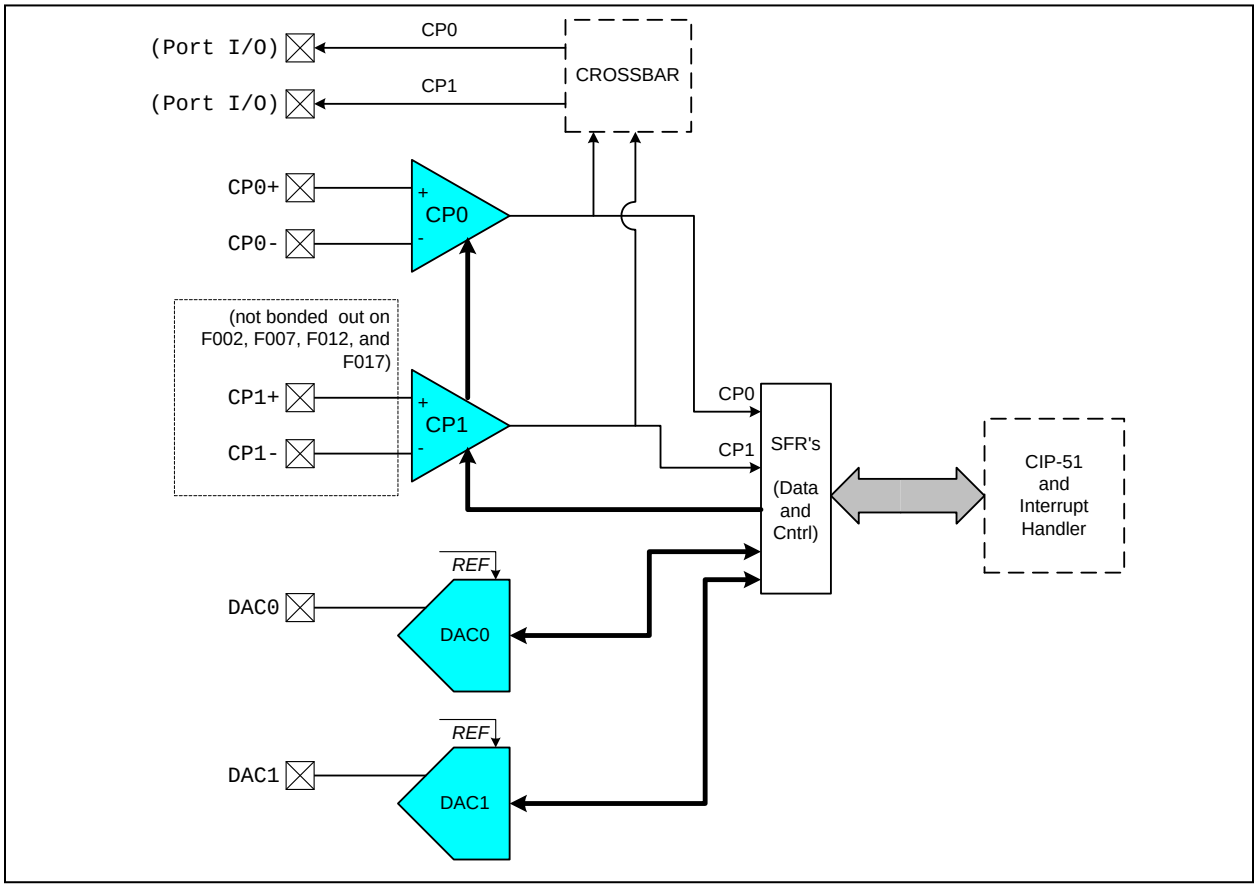

2. ABSOLUTE MAXIMUM RATINGS*

Ambient temperature under bias ..... -55 to 125°C
Storage Temperature ..... -65 to 150°C
Voltage on any Pin (except VDD and Port I/O) with respect to DGND ..... -0.3V to (VDD + 0.3V)
Voltage on any Port I/O Pin or /RST with respect to DGND ..... -0.3V to 5.8V
Voltage on VDD with respect to DGND ..... -0.3V to 4.2V
Maximum Total current through VDD, AV+, DGND and AGND 800mA
Maximum output current sunk by any Port pin 100mA
Maximum output current sunk by any other I/O pin 25mA
Maximum output current sourced by any Port pin 100mA
Maximum output current sourced by any other I/O pin 25mA

*Note: Stresses above those listed under "Absolute Maximum Ratings" may cause permanent damage to the device. This is a stress rating only and functional operation of the devices at those or any other conditions above those indicated in the operation listings of this specification is not implied. Exposure to maximum rating conditions for extended periods may affect device reliability.

3. GLOBAL DC ELECTRICAL CHARACTERISTICS

-40°C to +85°C unless otherwise specified.

PARAMETER	CONDITIONS	MIN	TYP	MAX	UNITS
Analog Supply Voltage	(Note 1)	2.7	3.0	3.6	V
Analog Supply Current	Internal REF, ADC, DAC, Comparators all active		1	2	mA
Analog Supply Current with analog sub-systems inactive	Internal REF, ADC, DAC, Comparators all disabled, oscillator disabled		5	20	µA
Analog-to-Digital Supply Delta (| VDD – AV+ |)				0.5	V
Digital Supply Voltage		2.7	3.0	3.6	V
Digital Supply Current with CPU active	VDD = 2.7V, Clock=25MHz VDD = 2.7V, Clock=1MHz VDD = 2.7V, Clock=32kHz		12.5 0.5 10		mA mA µA
Digital Supply Current (shutdown)	Oscillator not running		5		µA
Digital Supply RAM Data Retention Voltage			1.5		V
Specified Operating Temperature Range		-40		+85	°C
SYSCLK (System Clock Frequency)	C8051F005/6/7, C8051F015/6/7 (Note 2)	0		25	MHz
SYSCLK (System Clock Frequency)	C8051F000/1/2, C8051F010/1/2 (Note 2)	0		20	MHz
Tsysl (SYSCLK Low Time)		18			ns
Tsysh (SYSCLK High Time)		18			ns

Note 1: Analog Supply AV+ must be greater than 1V for VDD monitor to operate.
Note 2: SYSCLK must be at least 32 kHz to enable debugging.

4. PINOUT AND PACKAGE DEFINITIONS

Table 4.1. Pin Definitions

Name	Pin Numbers			Type	Description
	F000 F005 F010 F015	F001 F006 F011 F016	F002 F007 F012 F017		
VDD	31, 40, 62	23, 32	18, 20		Digital Voltage Supply.
DGND	30, 41, 61	22, 33, 27, 19	17, 21		Digital Ground.
AV+	16, 17	13, 43	9, 29		Positive Analog Voltage Supply.
AGND	5, 15	44, 12	8, 30		Analog Ground.
TCK	22	18	14	D In	JTAG Test Clock with internal pull-up.
TMS	21	17	13	D In	JTAG Test-Mode Select with internal pull-up.
TDI	28	20	15	D In	JTAG Test Data Input with internal pull-up. TDI is latched on a rising edge of TCK.
TDO	29	21	16	D Out	JTAG Test Data Output with internal pull-up. Data is shifted out on TDO on the falling edge of TCK. TDO output is a tri-state driver.
XTAL1	18	14	10	A In	Crystal Input. This pin is the return for the internal oscillator circuit for a crystal or ceramic resonator. For a precision internal clock, connect a crystal or ceramic resonator from XTAL1 to XTAL2. If overdriven by an external CMOS clock, this becomes the system clock.
XTAL2	19	15	11	A Out	Crystal Output. This pin is the excitation driver for a crystal or ceramic resonator.
/RST	20	16	12	D I/O	Chip Reset. Open-drain output of internal Voltage Supply monitor. Is driven low when VDD is < 2.7V. An external source can force a system reset by driving this pin low.
VREF	6	3	3	A I/O	Voltage Reference. When configured as an input, this pin is the voltage reference for the MCU. Otherwise, the internal reference drives this pin.
CP0+	4	2	2	A In	Comparator 0 Non-Inverting Input.
CP0-	3	1	1	A In	Comparator 0 Inverting Input.
CP1+	2	45		A In	Comparator 1 Non-Inverting Input.
CP1-	1	46		A In	Comparator 1 Inverting Input.
DAC0	64	48	32	A Out	Digital to Analog Converter Output 0. The DAC0 voltage output. (See Section 7 DAC Specification for complete description).
DAC1	63	47	31	A Out	Digital to Analog Converter Output 1. The DAC1 voltage output. (See Section 7 DAC Specification for complete description).
AIN0	7	4	4	A In	Analog Mux Channel Input 0. (See ADC Specification for complete description).
AIN1	8	5	5	A In	Analog Mux Channel Input 1. (See ADC Specification for complete description).
AIN2	9	6	6	A In	Analog Mux Channel Input 2. (See ADC Specification for complete description).
AIN3	10	7	7	A In	Analog Mux Channel Input 3. (See ADC Specification for complete description).
AIN4	11	8		A In	Analog Mux Channel Input 4. (See ADC Specification for complete description).
AIN5	12	9		A In	Analog Mux Channel Input 5. (See ADC Specification for complete description).

Name	Pin Numbers			Type	Description
	F000 F005 F010 F015	F001 F006 F011 F016	F002 F007 F012 F017		
AIN6	13	10		A In	Analog Mux Channel Input 6. (See ADC Specification for complete description).
AIN7	14	11		A In	Analog Mux Channel Input 7. (See ADC Specification for complete description).
P0.0	39	31	19	D I/O	Port0 Bit0. (See the Port I/O Sub-System section for complete description).
P0.1	42	34	22	D I/O	Port0 Bit1. (See the Port I/O Sub-System section for complete description).
P0.2	47	35	23	D I/O	Port0 Bit2. (See the Port I/O Sub-System section for complete description).
P0.3	48	36	24	D I/O	Port0 Bit3. (See the Port I/O Sub-System section for complete description).
P0.4	49	37	25	D I/O	Port0 Bit4. (See the Port I/O Sub-System section for complete description).
P0.5	50	38	26	D I/O	Port0 Bit5. (See the Port I/O Sub-System section for complete description).
P0.6	55	39	27	D I/O	Port0 Bit6. (See the Port I/O Sub-System section for complete description).
P0.7	56	40	28	D I/O	Port0 Bit7. (See the Port I/O Sub-System section for complete description).
P1.0	38	30		D I/O	Port1 Bit0. (See the Port I/O Sub-System section for complete description).
P1.1	37	29		D I/O	Port1 Bit1. (See the Port I/O Sub-System section for complete description).
P1.2	36	28		D I/O	Port1 Bit2. (See the Port I/O Sub-System section for complete description).
P1.3	35	26		D I/O	Port1 Bit3. (See the Port I/O Sub-System section for complete description).
P1.4	34	25		D I/O	Port1 Bit4. (See the Port I/O Sub-System section for complete description).
P1.5	32	24		D I/O	Port1 Bit5. (See the Port I/O Sub-System section for complete description).
P1.6	60	42		D I/O	Port1 Bit6. (See the Port I/O Sub-System section for complete description).
P1.7	59	41		D I/O	Port1 Bit7. (See the Port I/O Sub-System section for complete description).
P2.0	33			D I/O	Port2 Bit0. (See the Port I/O Sub-System section for complete description).
P2.1	27			D I/O	Port2 Bit1. (See the Port I/O Sub-System section for complete description).
P2.2	54			D I/O	Port2 Bit2. (See the Port I/O Sub-System section for complete description).
P2.3	53			D I/O	Port2 Bit3. (See the Port I/O Sub-System section for complete description).
P2.4	52			D I/O	Port2 Bit4. (See the Port I/O Sub-System section for complete description).
P2.5	51			D I/O	Port2 Bit5. (See the Port I/O Sub-System section for complete description).
P2.6	44			D I/O	Port2 Bit6. (See the Port I/O Sub-System section for complete description).
P2.7	43			D I/O	Port2 Bit7. (See the Port I/O Sub-System section for complete description).
P3.0	26			D I/O	Port3 Bit0. (See the Port I/O Sub-System section for complete description).
P3.1	25			D I/O	Port3 Bit1. (See the Port I/O Sub-System section for complete description).
P3.2	24			D I/O	Port3 Bit2. (See the Port I/O Sub-System section for complete description).
P3.3	23			D I/O	Port3 Bit3. (See the Port I/O Sub-System section for complete description).
P3.4	58			D I/O	Port3 Bit4. (See the Port I/O Sub-System section for complete description).
P3.5	57			D I/O	Port3 Bit5. (See the Port I/O Sub-System section for complete description).
P3.6	46			D I/O	Port3 Bit6. (See the Port I/O Sub-System section for complete description).
P3.7	45			D I/O	Port3 Bit7. (See the Port I/O Sub-System section for complete description).

Figure 4.1. TQFP-64 Pinout Diagram

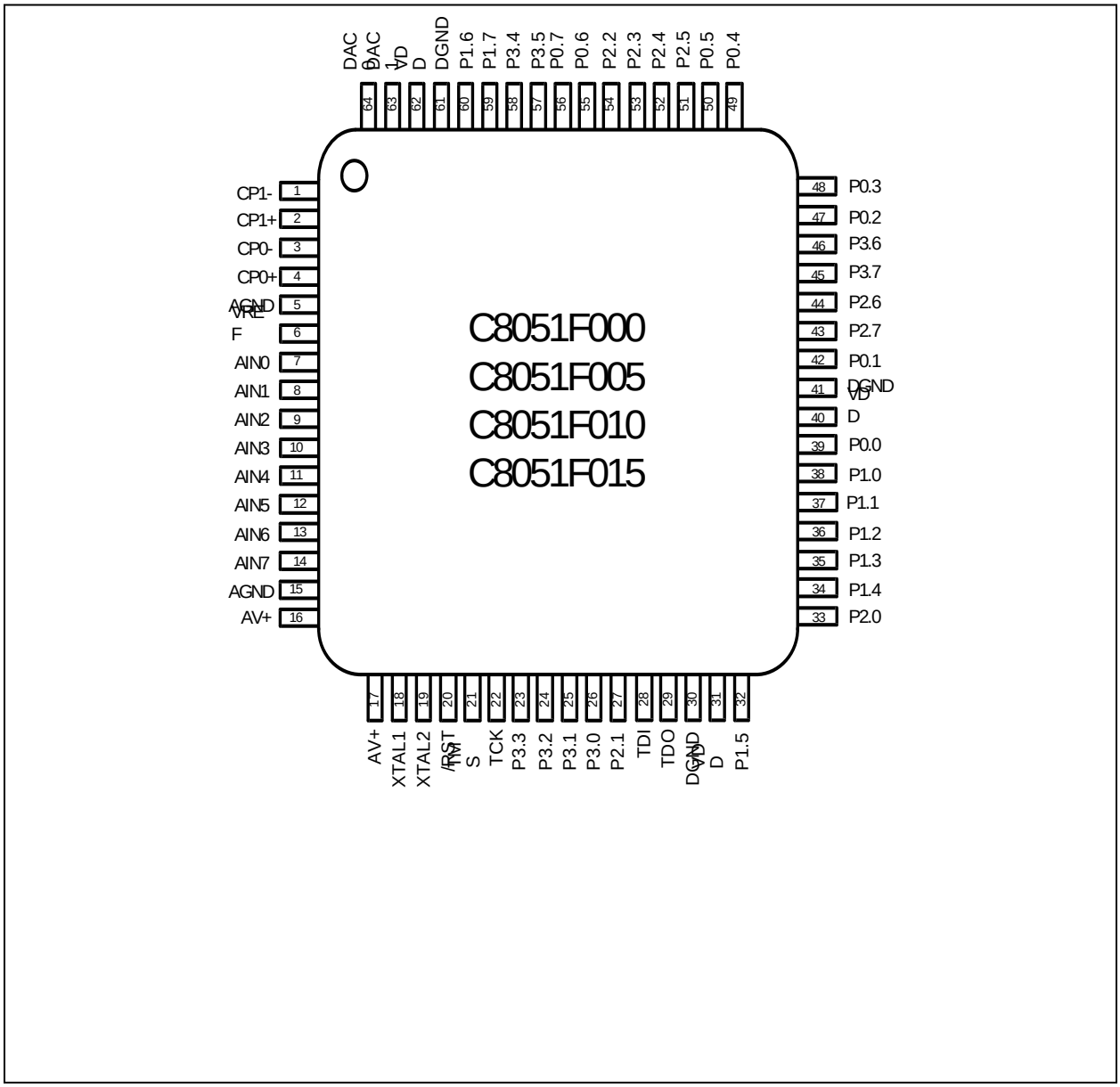

Figure 4.2. TQFP-64 Package Drawing

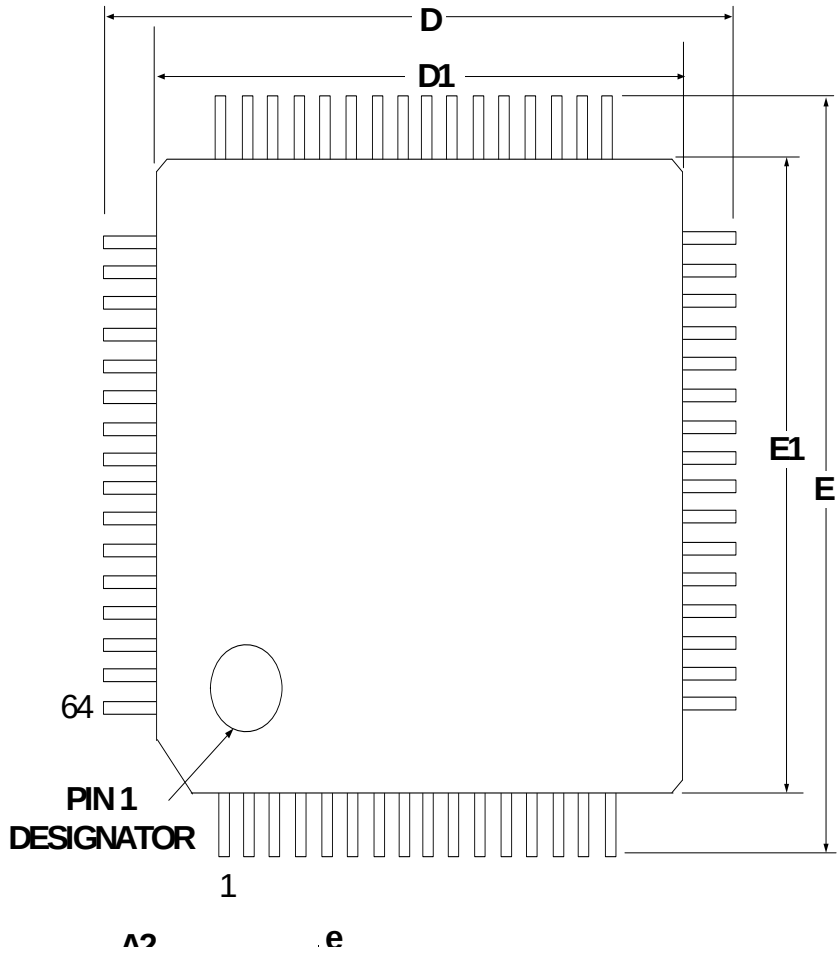

	MIN (mm)	NOM (mm)
A	-	-
A1	0.05	-
A2	0.95	-
b	0.17	0.22
D	-	12.00
D1	-	10.00
e	-	0.50

Figure 4.3. TQFP-48 Pinout Diagram

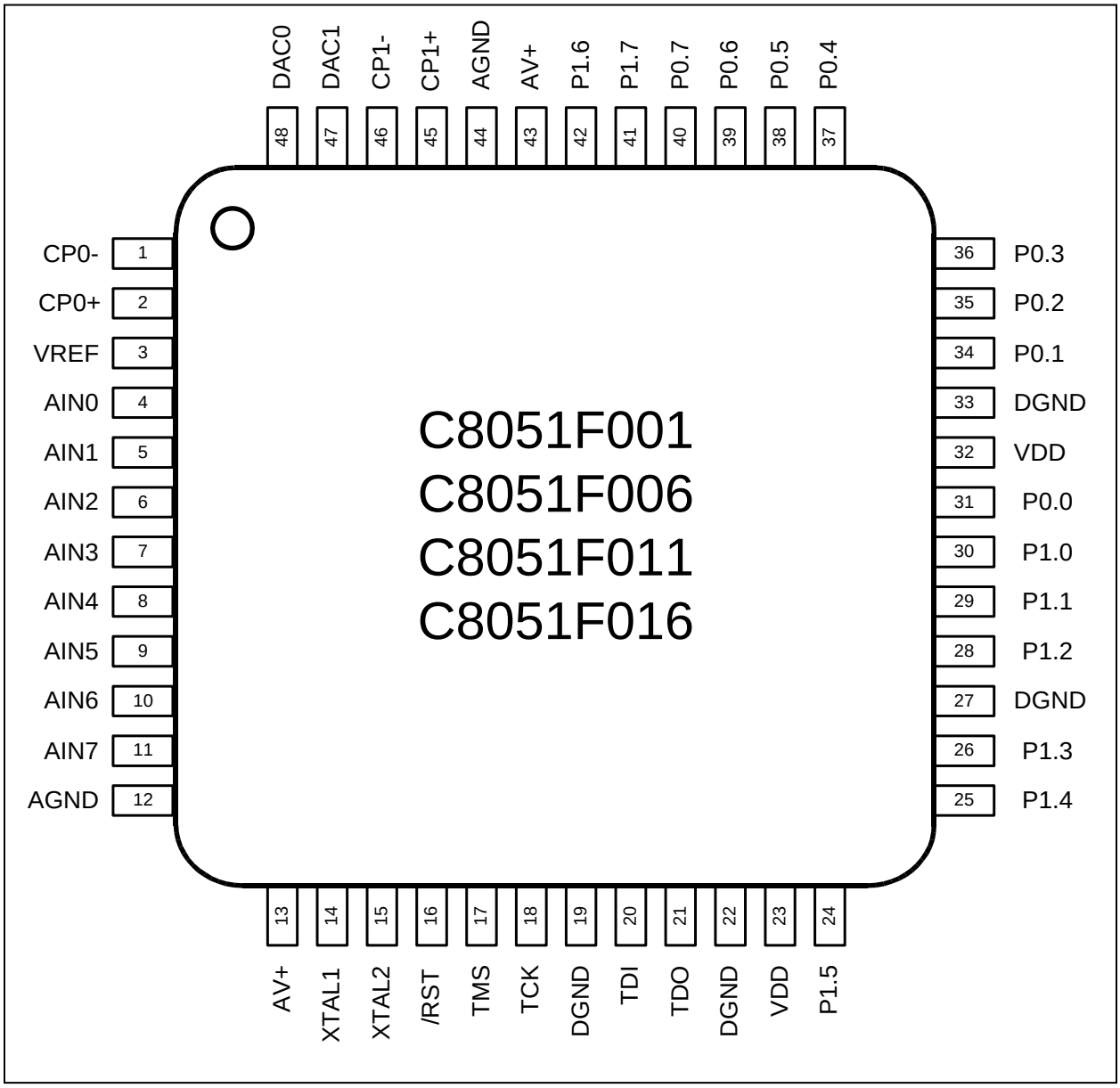

Figure 4.4. TQFP-48 Package Drawing

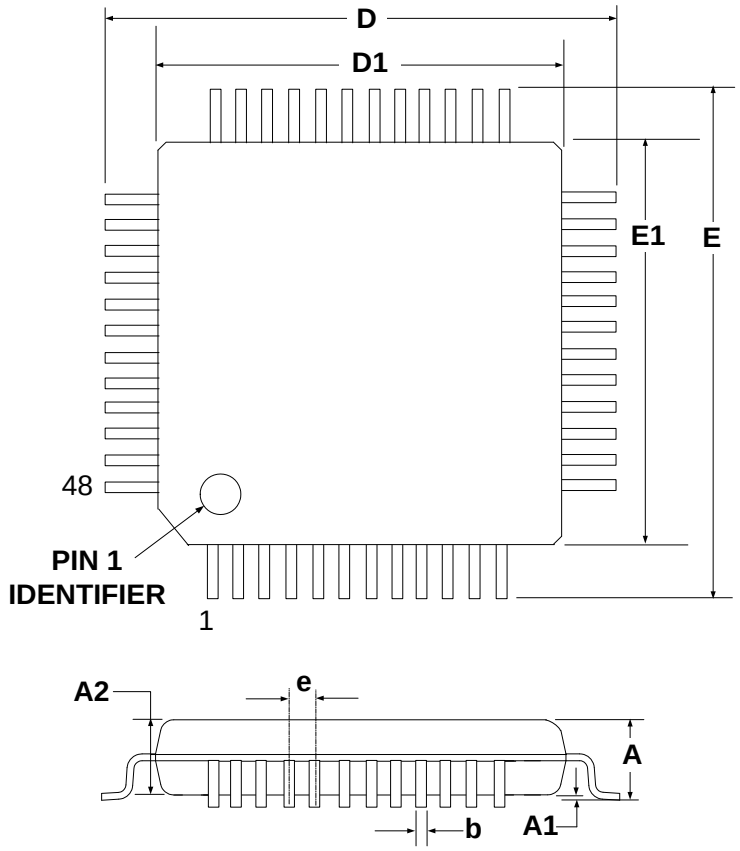

	MIN (mm)	NOM (mm)	MAX (mm)
A	-	-	1.20
A1	0.05	-	0.15
A2	0.95	1.00	1.05
b	0.17	0.22	0.27
D	-	9.00	-
D1	-	7.00	-
e	-	0.50	-
E	-	9.00	-
E1	-	7.00	-

Figure 4.5. LQFP-32 Pinout Diagram

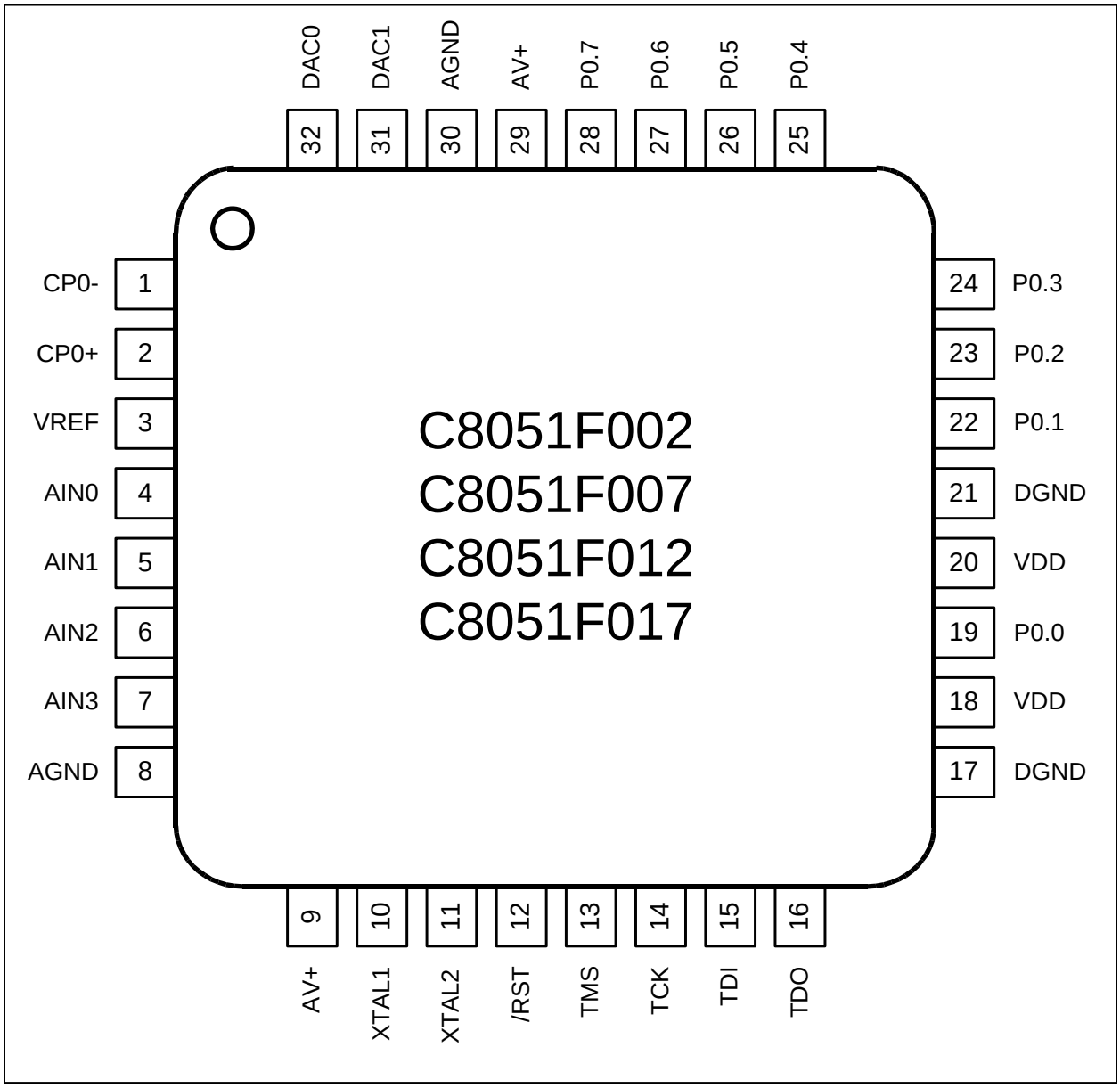

Figure 4.6. LQFP-32 Package Drawing

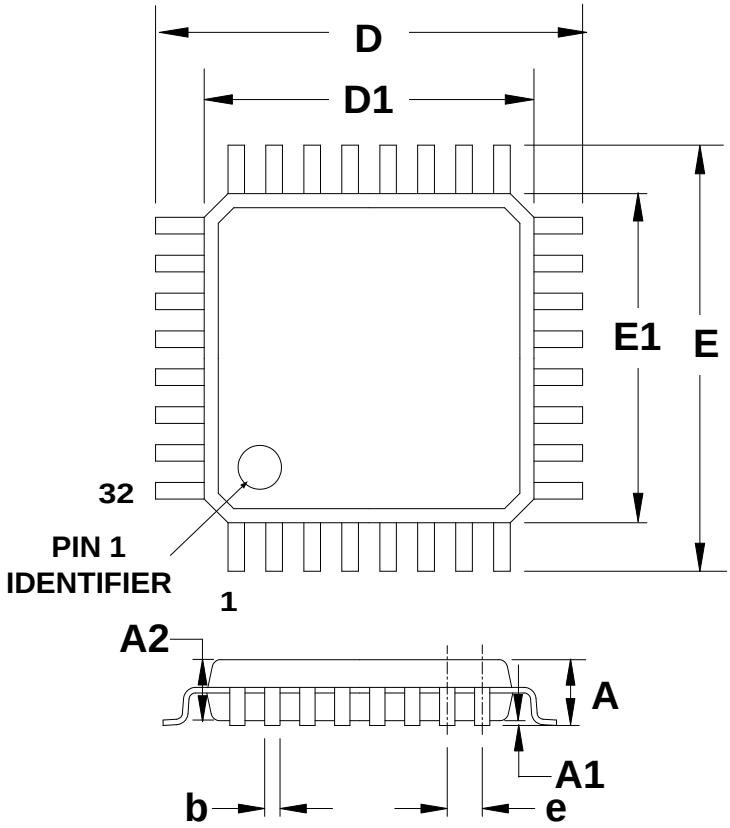

	MIN (mm)	NOM (mm)	MAX (mm)
A	-	-	1.60
A1	0.05	-	0.15
A2	1.35	1.40	1.45
b	0.30	0.37	0.45
D	-	9.00	-
D1	-	7.00	-
e	-	0.80	-
E	-	9.00	-
E1	-	7.00	-

5. ADC (12-Bit, C8051F000/1/2/5/6/7 Only)

The ADC subsystem for the C8051F000/1/2/5/6/7 consists of a 9-channel, configurable analog multiplexer (AMUX), a programmable gain amplifier (PGA), and a 100ksps, 12-bit successive-approximation-register ADC with integrated track-and-hold and programmable window detector (see block diagram in Figure 5.1). The AMUX, PGA, Data Conversion Modes, and Window Detector are all configurable under software control via the Special Function Register's shown in Figure 5.1. The ADC subsystem (ADC, track-and-hold and PGA) is enabled only when the ADCEN bit in the ADC Control register (ADC0CN, Figure 5.7) is set to 1. The ADC subsystem is in low power shutdown when this bit is 0. The Bias Enable bit (BIASE) in the REF0CN register (see Figure 9.2) must be set to 1 in order to supply bias to the ADC.

Figure 5.1. 12-Bit ADC Functional Block Diagram

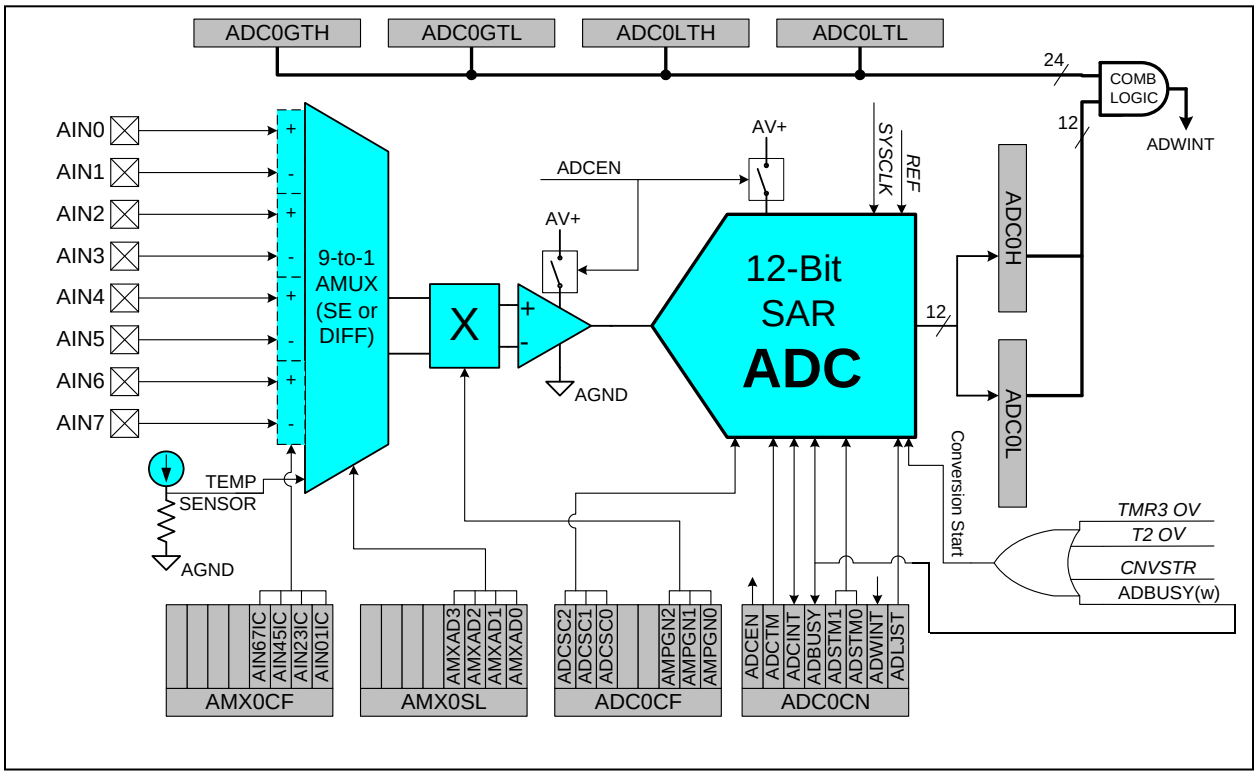

5.1. Analog Multiplexer and PGA

Eight of the AMUX channels are available for external measurements while the ninth channel is internally connected to an on-board temperature sensor (temperature transfer function is shown in Figure 5.3). Note that the PGA gain is applied to the temperature sensor reading. AMUX input pairs can be programmed to operate in either the differential or single-ended mode. This allows the user to select the best measurement technique for each input channel, and even accommodates mode changes "on-the-fly". The AMUX defaults to all single-ended inputs upon reset. There are two registers associated with the AMUX: the Channel Selection register AMX0SL (Figure 5.5), and the Configuration register AMX0CF (Figure 5.4). The table in Figure 5.5 shows AMUX functionality by channel for each possible configuration. The PGA amplifies the AMUX output signal by an amount determined by the AMPGN2-0 bits in the ADC Configuration register, ADC0CF (Figure 5.6). The PGA can be software-programmed for gains of 0.5, 1, 2, 4, 8 or 16. It defaults to unity gain on reset.

5.2. ADC Modes of Operation

The ADC uses VREF to determine its full-scale voltage, thus the reference must be properly configured before performing a conversion (see Section 9). The ADC has a maximum conversion speed of 100ksps. The ADC conversion clock is derived from the system clock. Conversion clock speed can be reduced by a factor of 2, 4, 8 or 16 via the ADCSC bits in the ADC0CF Register. This is useful to adjust conversion speed to accommodate different system clock speeds.

A conversion can be initiated in one of four ways, depending on the programmed states of the ADC Start of Conversion Mode bits (ADSTM1, ADSTM0) in ADC0CN. Conversions may be initiated by:

1. Writing a 1 to the ADBUSY bit of ADC0CN;
2. A Timer 3 overflow (i.e. timed continuous conversions);
3. A rising edge detected on the external ADC convert start signal, CNVSTR;
4. A Timer 2 overflow (i.e. timed continuous conversions).

Writing a 1 to ADBUSY provides software control of the ADC whereby conversions are performed "on-demand". During conversion, the ADBUSY bit is set to 1 and restored to 0 when conversion is complete. The falling edge of ADBUSY triggers an interrupt (when enabled) and sets the ADCINT interrupt flag. **Note: When conversions are performed "on-demand", the ADCINT flag, not ADBUSY, should be polled to determine when the conversion has completed.** Converted data is available in the ADC data word MSB and LSB registers, ADC0H, ADC0L. Converted data can be either left or right justified in the ADC0H:ADC0L register pair (see example in Figure 5.9) depending on the programmed state of the ADLJST bit in the ADC0CN register.

The ADCTM bit in register ADC0CN controls the ADC track-and-hold mode. In its default state, the ADC input is continuously tracked, except when a conversion is in progress. Setting ADCTM to 1 allows one of four different low power track-and-hold modes to be specified by states of the ADSTM1-0 bits (also in ADC0CN):

1. Tracking begins with a write of 1 to ADBUSY and lasts for 3 SAR clocks;
2. Tracking starts with an overflow of Timer 3 and lasts for 3 SAR clocks;
3. Tracking is active only when the CNVSTR input is low;
4. Tracking starts with an overflow of Timer 2 and lasts for 3 SAR clocks.

Modes 1, 2 and 4 (above) are useful when the start of conversion is triggered with a software command or when the ADC is operated continuously. Mode 3 is used when the start of conversion is triggered by external hardware. In this case, the track-and-hold is in its low power mode at times when the CNVSTR input is high. Tracking can also be disabled (shutdown) when the entire chip is in low power standby or sleep modes.

Figure 5.2. 12-Bit ADC Track and Conversion Example Timing

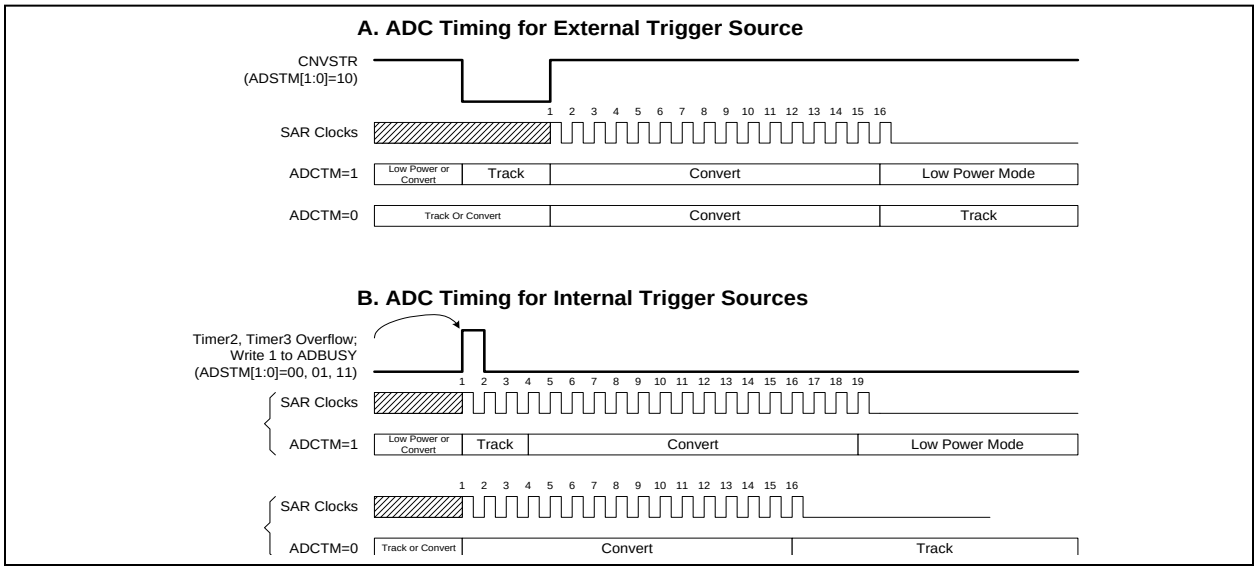

Figure 5.3. Temperature Sensor Transfer Function

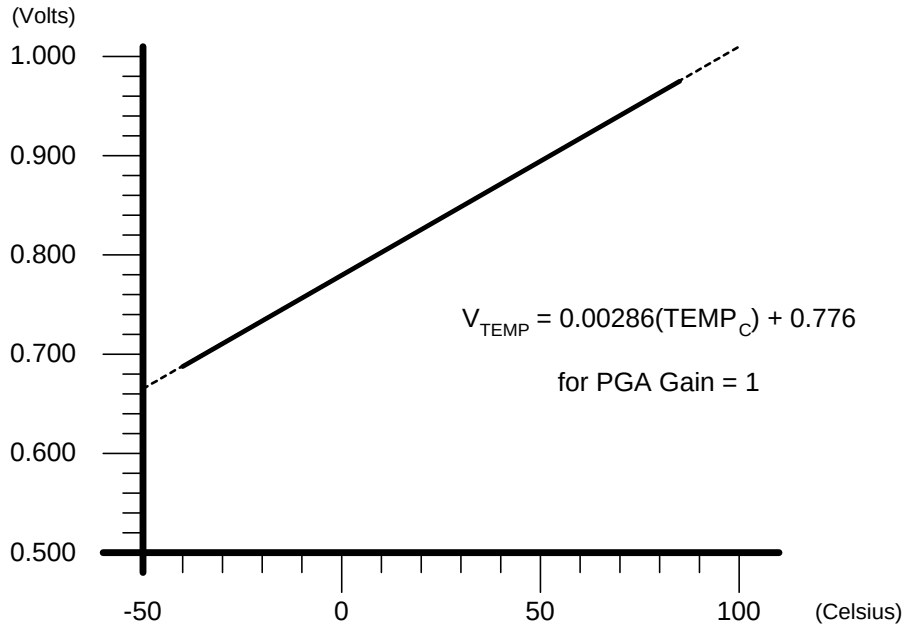

Figure 5.4. AMX0CF: AMUX Configuration Register (C8051F00x)

R/W	R/W	R/W	R/W	R/W	R/W	R/W	R/W	Reset Value
-	-	-	-	AIN67IC	AIN45IC	AIN23IC	AIN01IC	00000000
Bit7	Bit6	Bit5	Bit4	Bit3	Bit2	Bit1	Bit0	SFR Address: 0xBA

Bits7-4: UNUSED. Read = 0000b; Write = don't care
Bit3: AIN67IC: AIN6, AIN7 Input Pair Configuration Bit
0: AIN6 and AIN7 are independent singled-ended inputs
1: AIN6, AIN7 are (respectively) +, - differential input pair
Bit2: AIN45IC: AIN4, AIN5 Input Pair Configuration Bit
0: AIN4 and AIN5 are independent singled-ended inputs
1: AIN4, AIN5 are (respectively) +, - differential input pair
Bit1: AIN23IC: AIN2, AIN3 Input Pair Configuration Bit
0: AIN2 and AIN3 are independent singled-ended inputs
1: AIN2, AIN3 are (respectively) +, - differential input pair
Bit0: AIN01IC: AIN0, AIN1 Input Pair Configuration Bit
0: AIN0 and AIN1 are independent singled-ended inputs
1: AIN0, AIN1 are (respectively) +, - differential input pair

NOTE: The ADC Data Word is in 2's complement format for channels configured as differential.

Figure 5.5. AMX0SL: AMUX Channel Select Register (C8051F00x)

R/W	R/W	R/W	R/W	R/W	R/W	R/W	R/W	Reset Value
-	-	-	-	AMXAD3	AMXAD2	AMXAD1	AMXAD0	00000000
Bit7	Bit6	Bit5	Bit4	Bit3	Bit2	Bit1	Bit0	SFR Address: 0xBB

Bits7-4: UNUSED. Read = 0000b; Write = don't care
Bits3-0: AMXAD3-0: AMUX Address Bits
0000-1111: ADC Inputs selected per chart below

		AMXAD3-0								
		0000	**0001**	**0010**	**0011**	**0100**	**0101**	**0110**	**0111**	**1xxx**
AMX0CF BITS 3-0	**0000**	AIN0	AIN1	AIN2	AIN3	AIN4	AIN5	AIN6	AIN7	TEMP SENSOR
	0001	+(AIN0) -(AIN1)		AIN2	AIN3	AIN4	AIN5	AIN6	AIN7	TEMP SENSOR
	0010	AIN0	AIN1	+(AIN2) -(AIN3)		AIN4	AIN5	AIN6	AIN7	TEMP SENSOR
	0011	+(AIN0) -(AIN1)		+(AIN2) -(AIN3)		AIN4	AIN5	AIN6	AIN7	TEMP SENSOR
	0100	AIN0	AIN1	AIN2	AIN3	+(AIN4) -(AIN5)		AIN6	AIN7	TEMP SENSOR
	0101	+(AIN0) -(AIN1)		AIN2	AIN3	+(AIN4) -(AIN5)		AIN6	AIN7	TEMP SENSOR
	0110	AIN0	AIN1	+(AIN2) -(AIN3)		+(AIN4) -(AIN5)		AIN6	AIN7	TEMP SENSOR
	0111	+(AIN0) -(AIN1)		+(AIN2) -(AIN3)		+(AIN4) -(AIN5)		AIN6	AIN7	TEMP SENSOR
	1000	AIN0	AIN1	AIN2	AIN3	AIN4	AIN5	+(AIN6) -(AIN7)		TEMP SENSOR
	1001	+(AIN0) -(AIN1)		AIN2	AIN3	AIN4	AIN5	+(AIN6) -(AIN7)		TEMP SENSOR
	1010	AIN0	AIN1	+(AIN2) -(AIN3)		AIN4	AIN5	+(AIN6) -(AIN7)		TEMP SENSOR
	1011	+(AIN0) -(AIN1)		+(AIN2) -(AIN3)		AIN4	AIN5	+(AIN6) -(AIN7)		TEMP SENSOR
	1100	AIN0	AIN1	AIN2	AIN3	+(AIN4) -(AIN5)		+(AIN6) -(AIN7)		TEMP SENSOR
	1101	+(AIN0) -(AIN1)		AIN2	AIN3	+(AIN4) -(AIN5)		+(AIN6) -(AIN7)		TEMP SENSOR
	1110	AIN0	AIN1	+(AIN2) -(AIN3)		+(AIN4) -(AIN5)		+(AIN6) -(AIN7)		TEMP SENSOR
	1111	+(AIN0) -(AIN1)		+(AIN2) -(AIN3)		+(AIN4) -(AIN5)		+(AIN6) -(AIN7)		TEMP SENSOR

Figure 5.6. ADC0CF: ADC Configuration Register (C8051F00x)

R/W	R/W	R/W	R/W	R/W	R/W	R/W	R/W	Reset Value
ADCSC2	ADCSC1	ADCSC0	-	-	AMPGN2	AMPGN1	AMPGN0	01100000
Bit7	Bit6	Bit5	Bit4	Bit3	Bit2	Bit1	Bit0	SFR Address: 0xBC

Bits7-5: ADCSC2-0: ADC SAR Conversion Clock Period Bits
000: SAR Conversion Clock = 1 System Clock
001: SAR Conversion Clock = 2 System Clocks
010: SAR Conversion Clock = 4 System Clocks
011: SAR Conversion Clock = 8 System Clocks
1xx: SAR Conversion Clock = 16 Systems Clocks
(Note: the SAR Conversion Clock should be ≤ 2MHz)
Bits4-3: UNUSED. Read = 00b; Write = don't care
Bits2-0: AMPGN2-0: ADC Internal Amplifier Gain
000: Gain = 1
001: Gain = 2
010: Gain = 4
011: Gain = 8
10x: Gain = 16
11x: Gain = 0.5

Figure 5.7. ADC0CN: ADC Control Register (C8051F00x)

R/W	R/W	R/W	R/W	R/W	R/W	R/W	R/W	Reset Value
ADCEN	ADCTM	ADCINT	ADBUSY	ADSTM1	ADSTM0	ADWINT	ADLJST	00000000
Bit7	Bit6	Bit5	Bit4	Bit3	Bit2	Bit1	Bit0 (bit addressable)	SFR Address: 0xE8

Bit7: ADCEN: ADC Enable Bit
0: ADC Disabled. ADC is in low power shutdown.
1: ADC Enabled. ADC is active and ready for data conversions.

Bit6: ADCTM: ADC Track Mode Bit
0: When the ADC is enabled, tracking is always done unless a conversion is in process
1: Tracking Defined by ADSTM1-0 bits
ADSTM1-0:
00: Tracking starts with the write of 1 to ADBUSY and lasts for 3 SAR clocks
01: Tracking started by the overflow of Timer 3 and last for 3 SAR clocks
10: ADC tracks only when CNVSTR input is logic low
11: Tracking started by the overflow of Timer 2 and last for 3 SAR clocks

Bit5: ADCINT: ADC Conversion Complete Interrupt Flag
(Must be cleared by software)
0: ADC has not completed a data conversion since the last time this flag was cleared
1: ADC has completed a data conversion

Bit4: ADBUSY: ADC Busy Bit
Read
0: ADC Conversion complete or no valid data has been converted since a reset. The falling edge of ADBUSY generates an interrupt when enabled.
1: ADC Busy converting data
Write
0: No effect
1: Starts ADC Conversion if ADSTM1-0 = 00b

Bits3-2: ADSTM1-0: ADC Start of Conversion Mode Bits
00: ADC conversion started upon every write of 1 to ADBUSY
01: ADC conversions taken on every overflow of Timer 3
10: ADC conversion started upon every rising edge of CNVSTR
11: ADC conversions taken on every overflow of Timer 2

Bit1: ADWINT: ADC Window Compare Interrupt Flag
(Must be cleared by software)
0: ADC Window Comparison Data match has not occurred
1: ADC Window Comparison Data match occurred

Bit0: ADLJST: ADC Left Justify Data Bit
0: Data in ADC0H:ADC0L Registers is right justified
1: Data in ADC0H:ADC0L Registers is left justified

Figure 5.8. ADC0H: ADC Data Word MSB Register (C8051F00x)

R/W	R/W	R/W	R/W	R/W	R/W	R/W	R/W	Reset Value
								00000000
Bit7	Bit6	Bit5	Bit4	Bit3	Bit2	Bit1	Bit0	SFR Address: 0xBF

Bits7-0: ADC Data Word Bits
For ADLJST = 1: Upper 8-bits of the 12-bit ADC Data Word.
For ADLJST = 0: Bits7-4 are the sign extension of Bit3. Bits 3-0 are the upper 4-bits of the 12-bit ADC Data Word.

Figure 5.9. ADC0L: ADC Data Word LSB Register (C8051F00x)

R/W	R/W	R/W	R/W	R/W	R/W	R/W	R/W	Reset Value
								00000000
Bit7	Bit6	Bit5	Bit4	Bit3	Bit2	Bit1	Bit0	SFR Address: 0xBE

Bits7-0: ADC Data Word Bits
For ADLJST = 1: Bits7-4 are the lower 4-bits of the 12-bit ADC Data Word. Bits3-0 will always read 0.
For ADLJST = 0: Bits7-0 are the lower 8-bits of the 12-bit ADC Data Word.

NOTE: Resulting 12-bit ADC Data Word appears in the ADC Data Word Registers as follows:
ADC0H[3:0]:ADC0L[7:0], if ADLJST = 0
(ADC0H[7:4] will be sign extension of ADC0H.3 if a differential reading, otherwise = 0000b)

ADC0H[7:0]:ADC0L[7:4], if ADLJST = 1
(ADC0L[3:0] = 0000b)

EXAMPLE: ADC Data Word Conversion Map, AIN0 Input in Single-Ended Mode
(AMX0CF=0x00, AMX0SL=0x00)

AIN0 – AGND (Volts)	**ADC0H:ADC0L** (ADLJST = 0)	**ADC0H:ADC0L** (ADLJST = 1)
REF x (4095/4096)	0x0FFF	0xFFF0
REF x ½	0x0800	0x8000
REF x (2047/4096)	0x07FF	0x7FF0
0	0x0000	0x0000

EXAMPLE: ADC Data Word Conversion Map, AIN0-AIN1 Differential Input Pair
(AMX0CF=0x01, AMX0SL=0x00)

AIN0 – AIN1 (Volts)	**ADC0H:ADC0L** (ADLJST = 0)	**ADC0H:ADC0L** (ADLJST = 1)
REF x (2047/2048)	0x07FF	0x7FF0
0	0x0000	0x0000
-REF x (1/2048)	0xFFFF	0xFFF0
-REF	0xF800	0x8000

5.3. ADC Programmable Window Detector

The ADC programmable window detector is very useful in many applications. It continuously compares the ADC output to user-programmed limits and notifies the system when an out-of-band condition is detected. This is especially effective in an interrupt-driven system, saving code space and CPU bandwidth while delivering faster system response times. The window detector interrupt flag (ADWINT in ADC0CN) can also be used in polled mode. The high and low bytes of the reference words are loaded into the ADC Greater-Than and ADC Less-Than registers (ADC0GTH, ADC0GTL, ADC0LTH, and ADC0LTL). Figure 5.14 and Figure 5.15 show example comparisons for reference. Notice that the window detector flag can be asserted when the measured data is inside or outside the user-programmed limits, depending on the programming of the ADC0GTx and ADC0LTx registers.

Figure 5.10. ADC0GTH: ADC Greater-Than Data High Byte Register (C8051F00x)

R/W	R/W	R/W	R/W	R/W	R/W	R/W	R/W	Reset Value
								11111111
Bit7	Bit6	Bit5	Bit4	Bit3	Bit2	Bit1	Bit0	SFR Address: 0xC5

Bits7-0:
The high byte of the ADC Greater-Than Data Word.

Figure 5.11. ADC0GTL: ADC Greater-Than Data Low Byte Register (C8051F00x)

R/W	R/W	R/W	R/W	R/W	R/W	R/W	R/W	Reset Value
								11111111
Bit7	Bit6	Bit5	Bit4	Bit3	Bit2	Bit1	Bit0	SFR Address: 0xC4

Bits7-0:
The low byte of the ADC Greater-Than Data Word.
Definition:
ADC Greater-Than Data Word = ADC0GTH:ADC0GTL

Figure 5.12. ADC0LTH: ADC Less-Than Data High Byte Register (C8051F00x)

R/W	R/W	R/W	R/W	R/W	R/W	R/W	R/W	Reset Value
								00000000
Bit7	Bit6	Bit5	Bit4	Bit3	Bit2	Bit1	Bit0	SFR Address: 0xC7

Bits7-0:
The high byte of the ADC Less-Than Data Word.

Figure 5.13. ADC0LTL: ADC Less-Than Data Low Byte Register (C8051F00x)

R/W	R/W	R/W	R/W	R/W	R/W	R/W	R/W	Reset Value
								00000000
Bit7	Bit6	Bit5	Bit4	Bit3	Bit2	Bit1	Bit0	SFR Address: 0xC6

Bits7-0:
These bits are the low byte of the ADC Less-Than Data Word.
Definition:
ADC Less-Than Data Word = ADC0LTH:ADC0LTL

Figure 5.14. 12-Bit ADC Window Interrupt Examples, Right Justified Data

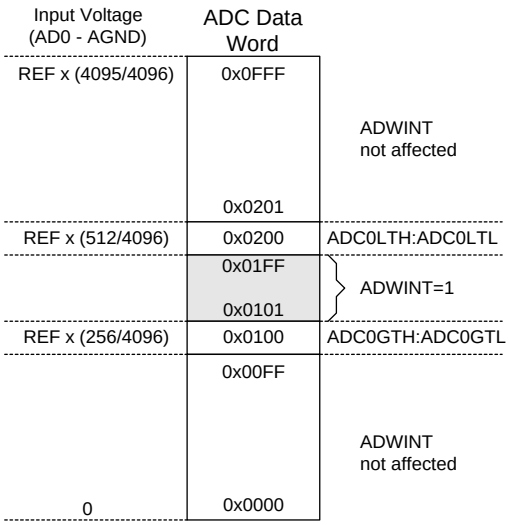

Given:
AMX0SL = 0x00, AMX0CF = 0x00, ADLJST = 0,
ADC0LTH:ADC0LTL = 0x0200,
ADC0GTH:ADC0GTL = 0x0100.

An ADC End of Conversion will cause an ADC Window Compare Interrupt (ADWINT=1) if the resulting ADC Data Word is < 0x0200 and > 0x0100.

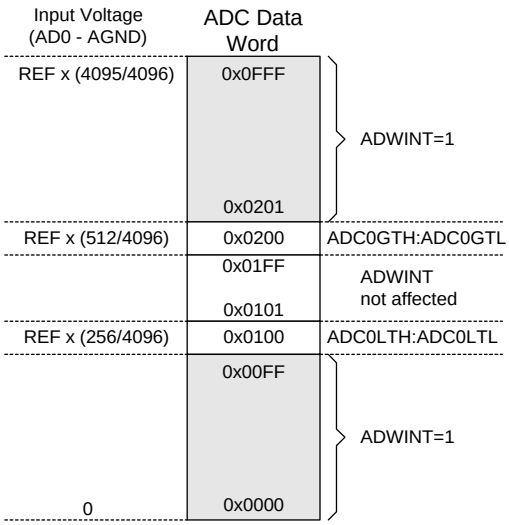

Given:
AMX0SL = 0x00, AMX0CF = 0x00, ADLJST = 0,
ADC0LTH:ADC0LTL = 0x0100,
ADC0GTH:ADC0GTL = 0x0200.

An ADC End of Conversion will cause an ADC Window Compare Interrupt (ADWINT=1) if the resulting ADC Data Word is < 0x0100 or > 0x0200.

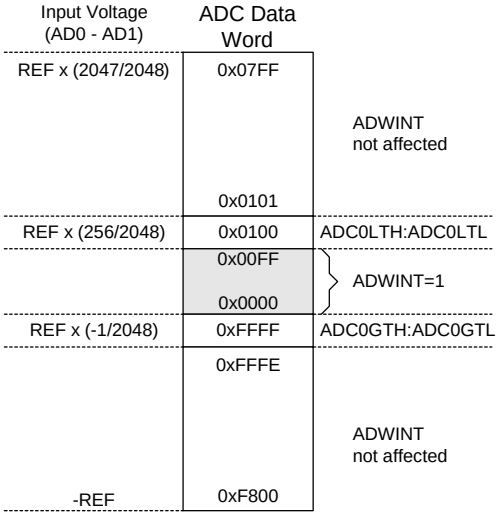

Given:

AMX0SL = 0x00, AMX0CF = 0x01, ADLJST = 0,
ADC0LTH:ADC0LTL = 0x0100,
ADC0GTH:ADC0GTL = 0xFFFF.

An ADC End of Conversion will cause an ADC Window Compare Interrupt (ADWINT=1) if the resulting ADC Data Word is < 0x0100 and > 0xFFFF. (Two's Complement math, 0xFFFF = -1.)

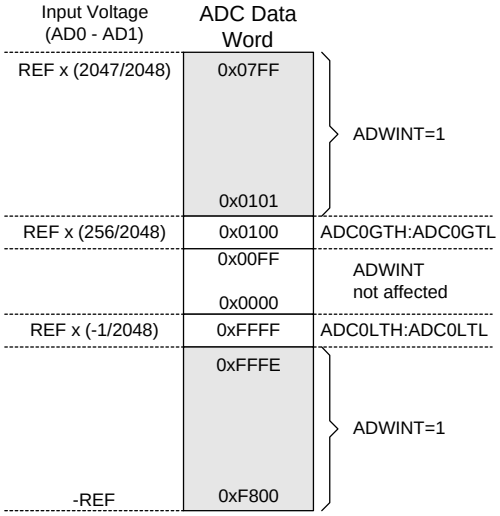

Given:

AMX0SL = 0x00, AMX0CF = 0x01, ADLJST = 0,
ADC0LTH:ADC0LTH = 0xFFFF,
ADC0GTH:ADC0GTL = 0x0100.

An ADC End of Conversion will cause an ADC Window Compare Interrupt (ADWINT=1) if the resulting ADC Data Word is < 0xFFFF or > 0x0100. (Two's Complement math, 0xFFFF = -1.)

Figure 5.15. 12-Bit ADC Window Interrupt Examples, Left Justified Data

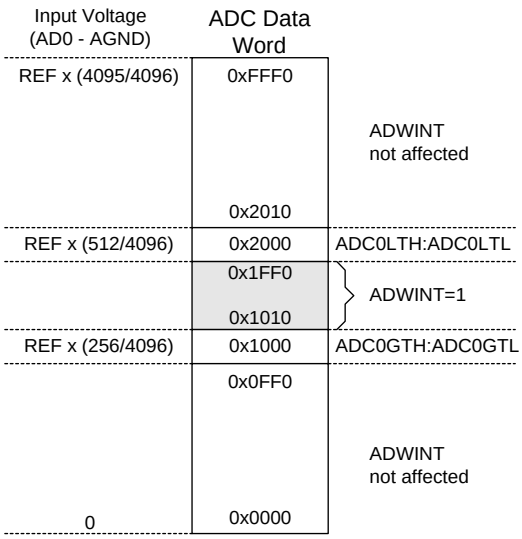

Given:
AMX0SL = 0x00, AMX0CF = 0x00, ADLJST = 1,
ADC0LTH:ADC0LTL = 0x2000,
ADC0GTH:ADC0GTL = 0x1000.

An ADC End of Conversion will cause an ADC Window Compare Interrupt (ADWINT=1) if the resulting ADC Data Word is < 0x2000 and > 0x1000.

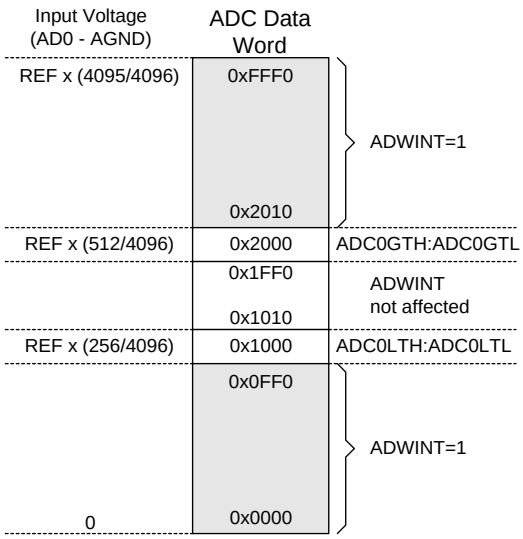

Given:
AMX0SL = 0x00, AMX0CF = 0x00, ADLJST = 1,
ADC0LTH:ADC0LTL = 0x1000,
ADC0GTH:ADC0GTL = 0x2000.

An ADC End of Conversion will cause an ADC Window Compare Interrupt (ADWINT=1) if the resulting ADC Data Word is < 0x1000 or > 0x2000.

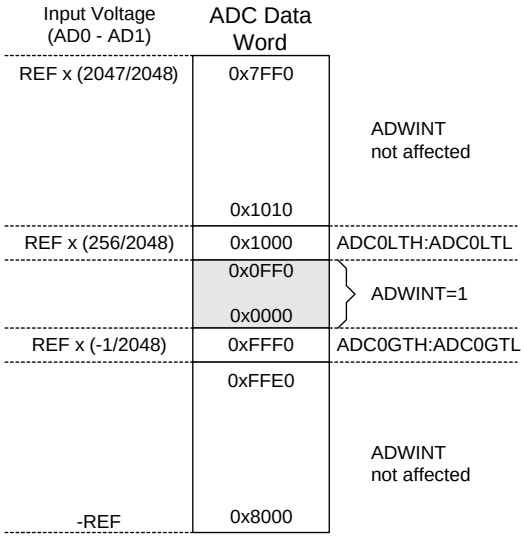

Given:

AMX0SL = 0x00, AMX0CF = 0x01, ADLJST = 1,
ADC0LTH:ADC0LTL = 0x1000,
ADC0GTH:ADC0GTL = 0xFFF0.

An ADC End of Conversion will cause an ADC Window Compare Interrupt (ADWINT=1) if the resulting ADC Data Word is < 0x1000 and > 0xFFF0. (Two's Complement math.)

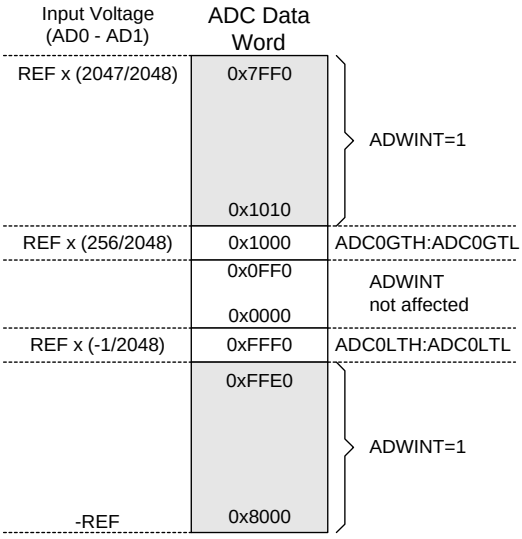

Given:

AMX0SL = 0x00, AMX0CF = 0x01, ADLJST = 1,
ADC0LTH:ADC0LTH = 0xFFF0,
ADC0GTH:ADC0GTL = 0x1000.

An ADC End of Conversion will cause an ADC Window Compare Interrupt (ADWINT=1) if the resulting ADC Data Word is < 0xFFF0 or > 0x1000. (Two's Complement math.)

Table 5.1. 12-Bit ADC Electrical Characteristics

VDD = 3.0V, AV+ = 3.0V, VREF = 2.40V (REFBE=0), PGA Gain = 1, -40°C to +85°C unless otherwise specified.

PARAMETER	CONDITIONS	MIN	TYP	MAX	UNITS
DC ACCURACY					
Resolution			12		bits
Integral Nonlinearity				± 1	LSB
Differential Nonlinearity	Guaranteed Monotonic			± 1	LSB
Offset Error			-3 ± 1		LSB
Full Scale Error	Differential mode		-7 ± 3		LSB
Offset Temperature Coefficient			± 0.25		ppm/°C
DYNAMIC PERFORMANCE (10kHz sine-wave input, 0 to –1dB of full scale, 100ksps)					
Signal-to-Noise Plus Distortion		66	69		dB
Total Harmonic Distortion	Up to the 5th harmonic		-75		dB
Spurious-Free Dynamic Range			80		dB
CONVERSION RATE					
Conversion Time in SAR Clocks		16			clocks
SAR Clock Frequency	C8051F000, ‘F001, ‘F002 C8051F005, ‘F006, ‘F007			2.0 2.5	MHz MHz
Track/Hold Acquisition Time		1.5			µs
Throughput Rate				100	ksps
ANALOG INPUTS					
Voltage Conversion Range	Single-ended Mode (AINn – AGND) Differential Mode |(AINn+) – (AINm-)|	0		VREF - 1LSB	V
Input Voltage	Any AINn pin	AGND		AV+	V
Input Capacitance			10		pF
TEMPERATURE SENSOR					
Linearity			± 0.20		°C
Absolute Accuracy			± 3		°C
Gain	PGA Gain = 1		2.86		mV/°C
Gain Error (±1σ)	PGA Gain = 1		± 33.5		µV/°C
Offset	PGA Gain = 1, Temp = 0°C		776		mV
Offset Error (±1σ)	PGA Gain = 1, Temp = 0°C		± 8.51		mV
POWER SPECIFICATIONS					
Power Supply Current (AV+ supplied to ADC)	Operating Mode, 100ksps		450	900	µA
Power Supply Rejection			± 0.3		mV/V

6. ADC (10-Bit, C8051F010/1/2/5/6/7 Only)

The ADC subsystem for the C8051F010/1/2/5/6/7 consists of a 9-channel, configurable analog multiplexer (AMUX), a programmable gain amplifier (PGA), and a 100ksps, 10-bit successive-approximation-register ADC with integrated track-and-hold and programmable window detector (see block diagram in Figure 6.1). The AMUX, PGA, Data Conversion Modes, and Window Detector are all configurable under software control via the Special Function Register's shown in Figure 6.1. The ADC subsystem (ADC, track-and-hold and PGA) is enabled only when the ADCEN bit in the ADC Control register (ADC0CN, Figure 6.7) is set to 1. The ADC subsystem is in low power shutdown when this bit is 0. The Bias Enable bit (BIASE) in the REF0CN register (see Figure 9.2) must be set to 1 in order to supply bias to the ADC.

Figure 6.1. 10-Bit ADC Functional Block Diagram

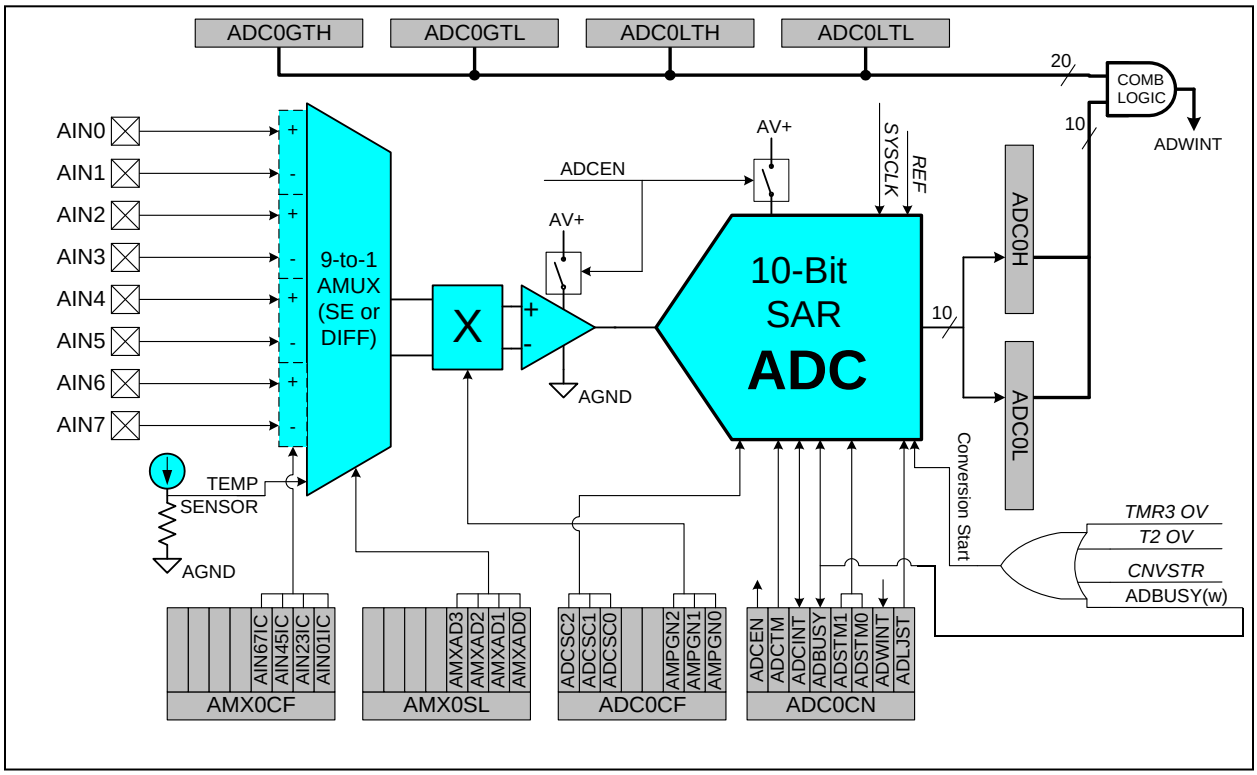

6.1. Analog Multiplexer and PGA

Eight of the AMUX channels are available for external measurements while the ninth channel is internally connected to an on-board temperature sensor (temperature transfer function is shown in Figure 6.3). Note that the PGA gain is applied to the temperature sensor reading. AMUX input pairs can be programmed to operate in either the differential or single-ended mode. This allows the user to select the best measurement technique for each input channel, and even accommodates mode changes "on-the-fly". The AMUX defaults to all single-ended inputs upon reset. There are two registers associated with the AMUX: the Channel Selection register AMX0SL (Figure 6.5), and the Configuration register AMX0CF (Figure 6.4). The table in Figure 6.5 shows AMUX functionality by channel for each possible configuration. The PGA amplifies the AMUX output signal by an amount determined by the AMPGN2-0 bits in the ADC Configuration register, ADC0CF (Figure 6.6). The PGA can be software-programmed for gains of 0.5, 1, 2, 4, 8 or 16. It defaults to unity gain on reset.

6.2. ADC Modes of Operation

The ADC uses VREF to determine its full-scale voltage, thus the reference must be properly configured before performing a conversion (see Section 9). The ADC has a maximum conversion speed of 100ksps. The ADC conversion clock is derived from the system clock. Conversion clock speed can be reduced by a factor of 2, 4, 8 or 16 via the ADCSC bits in the ADC0CF Register. This is useful to adjust conversion speed to accommodate different system clock speeds.

A conversion can be initiated in one of four ways, depending on the programmed states of the ADC Start of Conversion Mode bits (ADSTM1, ADSTM0) in ADC0CN. Conversions may be initiated by:

1. Writing a 1 to the ADBUSY bit of ADC0CN;
2. A Timer 3 overflow (i.e. timed continuous conversions);
3. A rising edge detected on the external ADC convert start signal, CNVSTR;
4. A Timer 2 overflow (i.e. timed continuous conversions).

Writing a 1 to ADBUSY provides software control of the ADC whereby conversions are performed "on-demand". During conversion, the ADBUSY bit is set to 1 and restored to 0 when conversion is complete. The falling edge of ADBUSY triggers an interrupt (when enabled) and sets the ADCINT interrupt flag. **Note: When conversions are performed "on-demand", the ADCINT flag, not ADBUSY, should be polled to determine when the conversion has completed.** Converted data is available in the ADC data word MSB and LSB registers, ADC0H, ADC0L. Converted data can be either left or right justified in the ADC0H:ADC0L register pair (see example in Figure 6.9) depending on the programmed state of the ADLJST bit in the ADC0CN register.

The ADCTM bit in register ADC0CN controls the ADC track-and-hold mode. In its default state, the ADC input is continuously tracked, except when a conversion is in progress. Setting ADCTM to 1 allows one of four different low power track-and-hold modes to be specified by states of the ADSTM1-0 bits (also in ADC0CN):

1. Tracking begins with a write of 1 to ADBUSY and lasts for 3 SAR clocks;
2. Tracking starts with an overflow of Timer 3 and lasts for 3 SAR clocks;
3. Tracking is active only when the CNVSTR input is low;
4. Tracking starts with an overflow of Timer 2 and lasts for 3 SAR clocks.

Modes 1, 2 and 4 (above) are useful when the start of conversion is triggered with a software command or when the ADC is operated continuously. Mode 3 is used when the start of conversion is triggered by external hardware. In this case, the track-and-hold is in its low power mode at times when the CNVSTR input is high. Tracking can also be disabled (shutdown) when the entire chip is in low power standby or sleep modes.

Figure 6.2. 10-Bit ADC Track and Conversion Example Timing

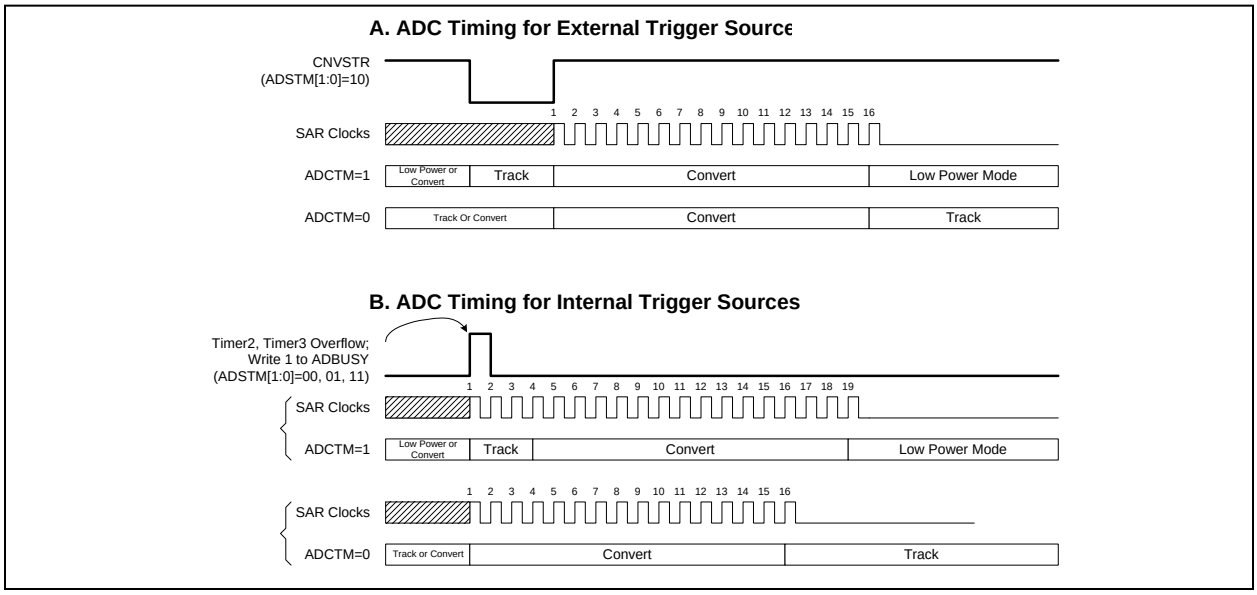

Figure 6.3. Temperature Sensor Transfer Function

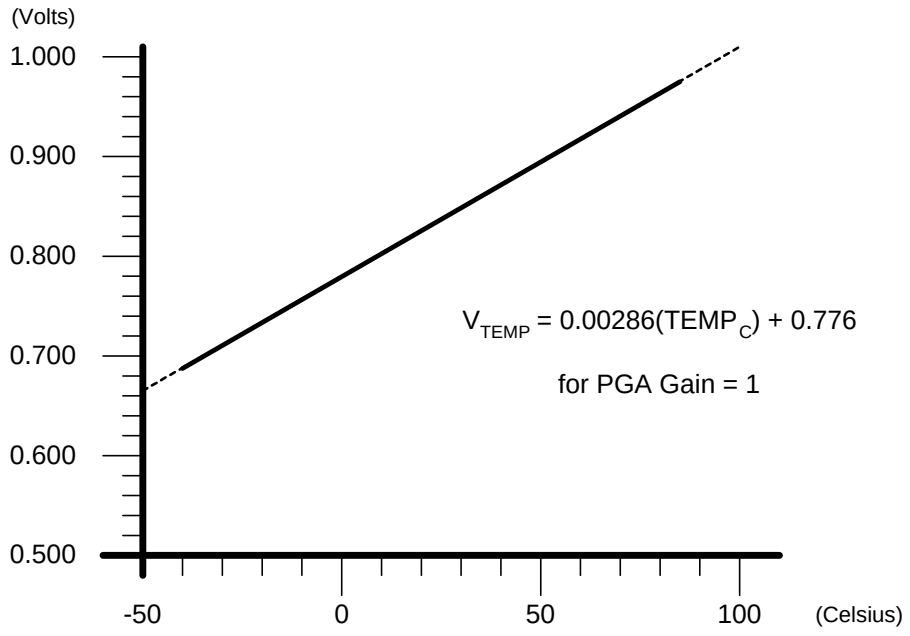

Figure 6.4. AMX0CF: AMUX Configuration Register (C8051F01x)

R/W	R/W	R/W	R/W	R/W	R/W	R/W	R/W	Reset Value
-	-	-	-	AIN67IC	AIN45IC	AIN23IC	AIN01IC	00000000
Bit7	Bit6	Bit5	Bit4	Bit3	Bit2	Bit1	Bit0	SFR Address: 0xBA

Bits7-4: UNUSED. Read = 0000b; Write = don't care
Bit3: AIN67IC: AIN6, AIN7 Input Pair Configuration Bit
0: AIN6 and AIN7 are independent singled-ended inputs
1: AIN6, AIN7 are (respectively) +, - differential input pair
Bit2: AIN45IC: AIN4, AIN5 Input Pair Configuration Bit
0: AIN4 and AIN5 are independent singled-ended inputs
1: AIN4, AIN5 are (respectively) +, - differential input pair
Bit1: AIN23IC: AIN2, AIN3 Input Pair Configuration Bit
0: AIN2 and AIN3 are independent singled-ended inputs
1: AIN2, AIN3 are (respectively) +, - differential input pair
Bit0: AIN01IC: AIN0, AIN1 Input Pair Configuration Bit
0: AIN0 and AIN1 are independent singled-ended inputs
1: AIN0, AIN1 are (respectively) +, - differential input pair

NOTE: The ADC Data Word is in 2's complement format for channels configured as differential.

Figure 6.5. AMX0SL: AMUX Channel Select Register (C8051F01x)

R/W	R/W	R/W	R/W	R/W	R/W	R/W	R/W	Reset Value
-	-	-	-	AMXAD3	AMXAD2	AMXAD1	AMXAD0	00000000
Bit7	Bit6	Bit5	Bit4	Bit3	Bit2	Bit1	Bit0	SFR Address: 0xBB

Bits7-4: UNUSED. Read = 0000b; Write = don't care
Bits3-0: AMXAD3-0: AMUX Address Bits
0000-1111: ADC Inputs selected per chart below

AMX0CF BITS 3-0	AMXAD3-0								
	0000	**0001**	**0010**	**0011**	**0100**	**0101**	**0110**	**0111**	**1xxx**
0000	AIN0	AIN1	AIN2	AIN3	AIN4	AIN5	AIN6	AIN7	TEMP SENSOR
0001	+(AIN0) -(AIN1)		AIN2	AIN3	AIN4	AIN5	AIN6	AIN7	TEMP SENSOR
0010	AIN0	AIN1	+(AIN2) -(AIN3)		AIN4	AIN5	AIN6	AIN7	TEMP SENSOR
0011	+(AIN0) -(AIN1)		+(AIN2) -(AIN3)		AIN4	AIN5	AIN6	AIN7	TEMP SENSOR
0100	AIN0	AIN1	AIN2	AIN3	+(AIN4) -(AIN5)		AIN6	AIN7	TEMP SENSOR
0101	+(AIN0) -(AIN1)		AIN2	AIN3	+(AIN4) -(AIN5)		AIN6	AIN7	TEMP SENSOR
0110	AIN0	AIN1	+(AIN2) -(AIN3)		+(AIN4) -(AIN5)		AIN6	AIN7	TEMP SENSOR
0111	+(AIN0) -(AIN1)		+(AIN2) -(AIN3)		+(AIN4) -(AIN5)		AIN6	AIN7	TEMP SENSOR
1000	AIN0	AIN1	AIN2	AIN3	AIN4	AIN5	+(AIN6) -(AIN7)		TEMP SENSOR
1001	+(AIN0) -(AIN1)		AIN2	AIN3	AIN4	AIN5	+(AIN6) -(AIN7)		TEMP SENSOR
1010	AIN0	AIN1	+(AIN2) -(AIN3)		AIN4	AIN5	+(AIN6) -(AIN7)		TEMP SENSOR
1011	+(AIN0) -(AIN1)		+(AIN2) -(AIN3)		AIN4	AIN5	+(AIN6) -(AIN7)		TEMP SENSOR
1100	AIN0	AIN1	AIN2	AIN3	+(AIN4) -(AIN5)		+(AIN6) -(AIN7)		TEMP SENSOR
1101	+(AIN0) -(AIN1)		AIN2	AIN3	+(AIN4) -(AIN5)		+(AIN6) -(AIN7)		TEMP SENSOR
1110	AIN0	AIN1	+(AIN2) -(AIN3)		+(AIN4) -(AIN5)		+(AIN6) -(AIN7)		TEMP SENSOR
1111	+(AIN0) -(AIN1)		+(AIN2) -(AIN3)		+(AIN4) -(AIN5)		+(AIN6) -(AIN7)		TEMP SENSOR

Figure 6.6. ADC0CF: ADC Configuration Register (C8051F01x)

R/W	R/W	R/W	R/W	R/W	R/W	R/W	R/W	Reset Value
ADCSC2	ADCSC1	ADCSC0	-	-	AMPGN2	AMPGN1	AMPGN0	01100000
Bit7	Bit6	Bit5	Bit4	Bit3	Bit2	Bit1	Bit0	SFR Address: 0xBC

Bits7-5: ADCSC2-0: ADC SAR Conversion Clock Period Bits
000: SAR Conversion Clock = 1 System Clock
001: SAR Conversion Clock = 2 System Clocks
010: SAR Conversion Clock = 4 System Clocks
011: SAR Conversion Clock = 8 System Clocks
1xx: SAR Conversion Clock = 16 Systems Clocks
(Note: Conversion clock should be ≤ 2MHz.)
Bits4-3: UNUSED. Read = 00b; Write = don't care
Bits2-0: AMPGN2-0: ADC Internal Amplifier Gain
000: Gain = 1
001: Gain = 2
010: Gain = 4
011: Gain = 8
10x: Gain = 16
11x: Gain = 0.5

Figure 6.7. ADC0CN: ADC Control Register (C8051F01x)

R/W	R/W	R/W	R/W	R/W	R/W	R/W	R/W	Reset Value
ADCEN	ADCTM	ADCINT	ADBUSY	ADSTM1	ADSTM0	ADWINT	ADLJST	00000000
Bit7	Bit6	Bit5	Bit4	Bit3	Bit2	Bit1	Bit0 (bit addressable)	SFR Address: 0xE8

Bit7: ADCEN: ADC Enable Bit
0: ADC Disabled. ADC is in low power shutdown.
1: ADC Enabled. ADC is active and ready for data conversions.

Bit6: ADCTM: ADC Track Mode Bit
0: When the ADC is enabled, tracking is always done unless a conversion is in process
1: Tracking Defined by ADSTM1-0 bits
ADSTM1-0:
00: Tracking starts with the write of 1 to ADBUSY and lasts for 3 SAR clocks
01: Tracking started by the overflow of Timer 3 and last for 3 SAR clocks
10: ADC tracks only when CNVSTR input is logic low
11: Tracking started by the overflow of Timer 2 and last for 3 SAR clocks

Bit5: ADCINT: ADC Conversion Complete Interrupt Flag
(Must be cleared by software)
0: ADC has not completed a data conversion since the last time this flag was cleared
1: ADC has completed a data conversion

Bit4: ADBUSY: ADC Busy Bit
Read
0: ADC Conversion complete or no valid data has been converted since a reset. The falling edge of ADBUSY generates an interrupt when enabled.
1: ADC Busy converting data
Write
0: No effect
1: Starts ADC Conversion if ADSTM1-0 = 00b

Bits3-2: ADSTM1-0: ADC Start of Conversion Mode Bits
00: ADC conversion started upon every write of 1 to ADBUSY
01: ADC conversions taken on every overflow of Timer 3
10: ADC conversion started upon every rising edge of CNVSTR
11: ADC conversions taken on every overflow of Timer 2

Bit1: ADWINT: ADC Window Compare Interrupt Flag
(Must be cleared by software)
0: ADC Window Comparison Data match has not occurred
1: ADC Window Comparison Data match occurred

Bit0: ADLJST: ADC Left Justify Data Bit
0: Data in ADC0H:ADC0L Registers is right justified
1: Data in ADC0H:ADC0L Registers is left justified

Figure 6.8. ADC0H: ADC Data Word MSB Register (C8051F01x)

R/W	R/W	R/W	R/W	R/W	R/W	R/W	R/W	Reset Value
								00000000
Bit7	Bit6	Bit5	Bit4	Bit3	Bit2	Bit1	Bit0	SFR Address: 0xBF

Bits7-0: ADC Data Word Bits
For ADLJST = 1: Upper 8-bits of the 10-bit ADC Data Word.
For ADLJST = 0: Bits7-2 are the sign extension of Bit1. Bits 1-0 are the upper 2-bits of the 10-bit ADC Data Word.

Figure 6.9. ADC0L: ADC Data Word LSB Register (C8051F01x)

R/W	R/W	R/W	R/W	R/W	R/W	R/W	R/W	Reset Value
								00000000
Bit7	Bit6	Bit5	Bit4	Bit3	Bit2	Bit1	Bit0	SFR Address: 0xBE

Bits7-0: ADC Data Word Bits
For ADLJST = 1: Bits7-6 are the lower 2-bits of the 10-bit ADC Data Word. Bits5-0 will always read 0.
For ADLJST = 0: Bits7-0 are the lower 8-bits of the 10-bit ADC Data Word.

NOTE: Resulting 10-bit ADC Data Word appears in the ADC Data Word Registers as follows:
ADC0H[1:0]:ADC0L[7:0], if ADLJST = 0
(ADC0H[7:2] will be sign extension of ADC0H.1 if a differential reading, otherwise = 000000b)

ADC0H[7:0]:ADC0L[7:6], if ADLJST = 1
(ADC0L[5:0] = 000000b)

EXAMPLE: ADC Data Word Conversion Map, AIN0 Input in Single-Ended Mode
(AMX0CF=0x00, AMX0SL=0x00)

AIN0 – AGND (Volts)	**ADC0H:ADC0L** (ADLJST = 0)	**ADC0H:ADC0L** (ADLJST = 1)
REF x (1023/1024)	0x03FF	0xFFC0
REF x ½	0x0200	0x8000
REF x (511/1024)	0x01FF	0x7FC0
0	0x0000	0x0000

EXAMPLE: ADC Data Word Conversion Map, AIN0-AIN1 Differential Input Pair
(AMX0CF=0x01, AMX0SL=0x00)

AIN0 – AIN1 (Volts)	**ADC0H:ADC0L** (ADLJST = 0)	**ADC0H:ADC0L** (ADLJST = 1)
REF x (511/512)	0x01FF	0x7FC0
0	0x0000	0x0000
-REF x (1/512)	0xFFFF	0xFFC0
-REF	0xFE00	0x8000

6.3. ADC Programmable Window Detector

The ADC programmable window detector is very useful in many applications. It continuously compares the ADC output to user-programmed limits and notifies the system when an out-of-band condition is detected. This is especially effective in an interrupt-driven system, saving code space and CPU bandwidth while delivering faster system response times. The window detector interrupt flag (ADWINT in ADC0CN) can also be used in polled mode. The high and low bytes of the reference words are loaded into the ADC Greater-Than and ADC Less-Than registers (ADC0GTH, ADC0GTL, ADC0LTH, and ADC0LTL). Figure 6.14 and Figure 6.15 show example comparisons for reference. Notice that the window detector flag can be asserted when the measured data is inside or outside the user-programmed limits, depending on the programming of the ADC0GTx and ADC0LTx registers.

Figure 6.10. ADC0GTH: ADC Greater-Than Data High Byte Register (C8051F01x)

R/W	R/W	R/W	R/W	R/W	R/W	R/W	R/W	Reset Value
								11111111
Bit7	Bit6	Bit5	Bit4	Bit3	Bit2	Bit1	Bit0	SFR Address: 0xC5

Bits7-0:
The high byte of the ADC Greater-Than Data Word.

Figure 6.11. ADC0GTL: ADC Greater-Than Data Low Byte Register (C8051F01x)

R/W	R/W	R/W	R/W	R/W	R/W	R/W	R/W	Reset Value
								11111111
Bit7	Bit6	Bit5	Bit4	Bit3	Bit2	Bit1	Bit0	SFR Address: 0xC4

Bits7-0:
The low byte of the ADC Greater-Than Data Word.
Definition:
ADC Greater-Than Data Word = ADC0GTH:ADC0GTL

Figure 6.12. ADC0LTH: ADC Less-Than Data High Byte Register (C8051F01x)

R/W	R/W	R/W	R/W	R/W	R/W	R/W	R/W	Reset Value
								00000000
Bit7	Bit6	Bit5	Bit4	Bit3	Bit2	Bit1	Bit0	SFR Address: 0xC7

Bits7-0:
The high byte of the ADC Less-Than Data Word.

Figure 6.13. ADC0LTL: ADC Less-Than Data Low Byte Register (C8051F01x)

R/W	R/W	R/W	R/W	R/W	R/W	R/W	R/W	Reset Value
								00000000
Bit7	Bit6	Bit5	Bit4	Bit3	Bit2	Bit1	Bit0	SFR Address: 0xC6

Bits7-0:
These bits are the low byte of the ADC Less-Than Data Word.

Definition:
ADC Less-Than Data Word = ADC0LTH:ADC0LTL

Figure 6.14. 10-Bit ADC Window Interrupt Examples, Right Justified Data

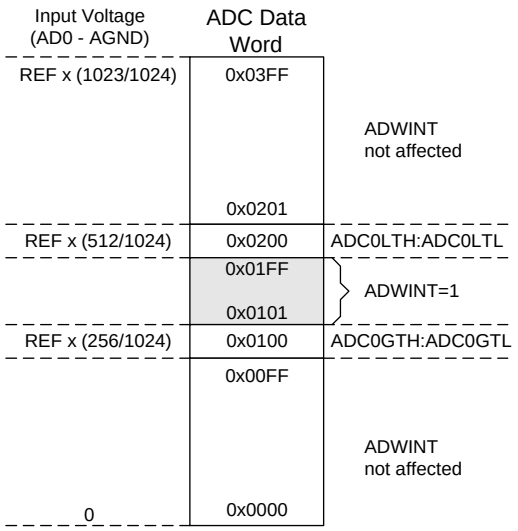

Given:
AMX0SL = 0x00, AMX0CF = 0x00, ADLJST = 0,
ADC0LTH:ADC0LTL = 0x0200,
ADC0GTH:ADC0GTL = 0x0100.

An ADC End of Conversion will cause an ADC Window Compare Interrupt (ADWINT=1) if the resulting ADC Data Word is < 0x0200 and > 0x0100.

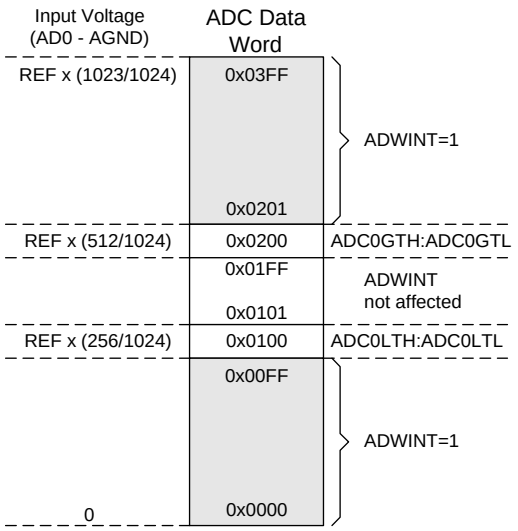

Given:
AMX0SL = 0x00, AMX0CF = 0x00, ADLJST = 0,
ADC0LTH:ADC0LTL = 0x0100,
ADC0GTH:ADC0GTL = 0x0200.

An ADC End of Conversion will cause an ADC Window Compare Interrupt (ADWINT=1) if the resulting ADC Data Word is < 0x0100 or > 0x0200.

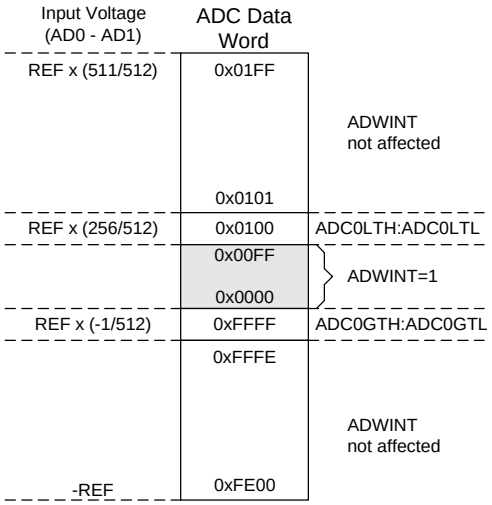

Given:

AMX0SL = 0x00, AMX0CF = 0x01, ADLJST = 0,
ADC0LTH:ADC0LTL = 0x0100,
ADC0GTH:ADC0GTL = 0xFFFF.

An ADC End of Conversion will cause an ADC Window Compare Interrupt (ADWINT=1) if the resulting ADC Data Word is < 0x0100 and > 0xFFFF. (Two's Complement math, 0xFFFF = -1.)

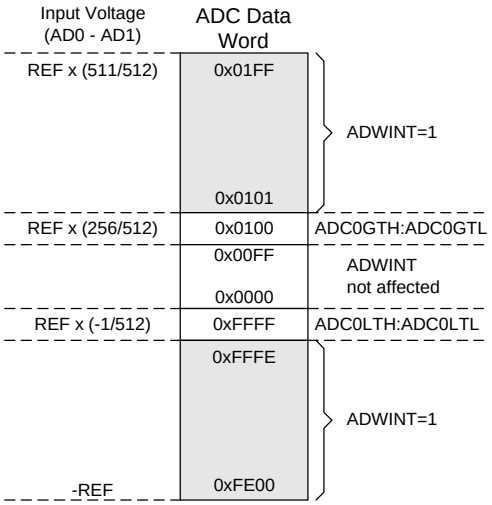

Given:

AMX0SL = 0x00, AMX0CF = 0x01, ADLJST = 0,
ADC0LTH:ADC0LTH = 0xFFFF,
ADC0GTH:ADC0GTL = 0x0100.

An ADC End of Conversion will cause an ADC Window Compare Interrupt (ADWINT=1) if the resulting ADC Data Word is < 0xFFFF or > 0x0100. (Two's Complement math, 0xFFFF = -1.)

Figure 6.15. 10-Bit ADC Window Interrupt Examples, Left Justified Data

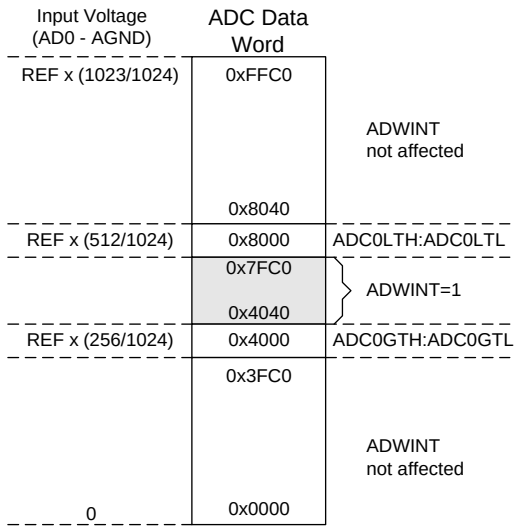

Given:
AMX0SL = 0x00, AMX0CF = 0x00, ADLJST = 1,
ADC0LTH:ADC0LTL = 0x8000,
ADC0GTH:ADC0GTL = 0x4000.

An ADC End of Conversion will cause an ADC Window Compare Interrupt (ADWINT=1) if the resulting ADC Data Word is < 0x8000 and > 0x4000.

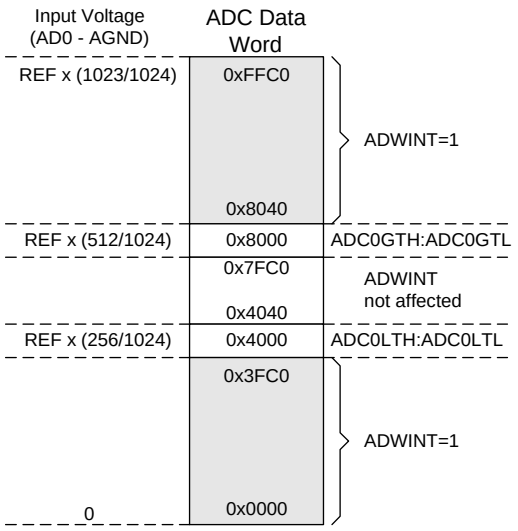

Given:
AMX0SL = 0x00, AMX0CF = 0x00, ADLJST = 1,
ADC0LTH:ADC0LTL = 0x4000,
ADC0GTH:ADC0GTL = 0x8000.

An ADC End of Conversion will cause an ADC Window Compare Interrupt (ADWINT=1) if the resulting ADC Data Word is < 0x4000 or > 0x8000.

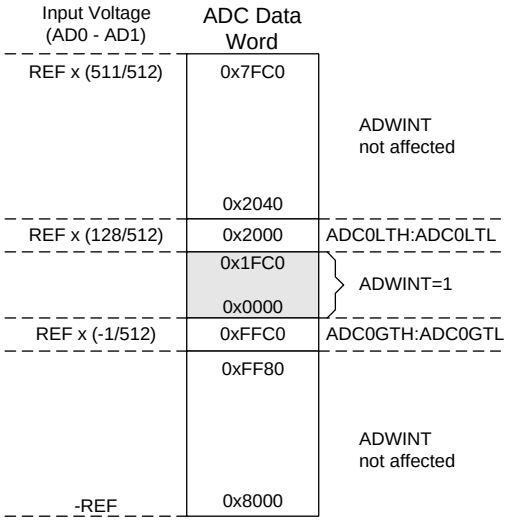

Given:

AMX0SL = 0x00, AMX0CF = 0x01, ADLJST = 1,
ADC0LTH:ADC0LTL = 0x2000,
ADC0GTH:ADC0GTL = 0xFFC0.

An ADC End of Conversion will cause an ADC Window Compare Interrupt (ADWINT=1) if the resulting ADC Data Word is < 0x2000 and > 0xFFC0. (Two's Complement math.)

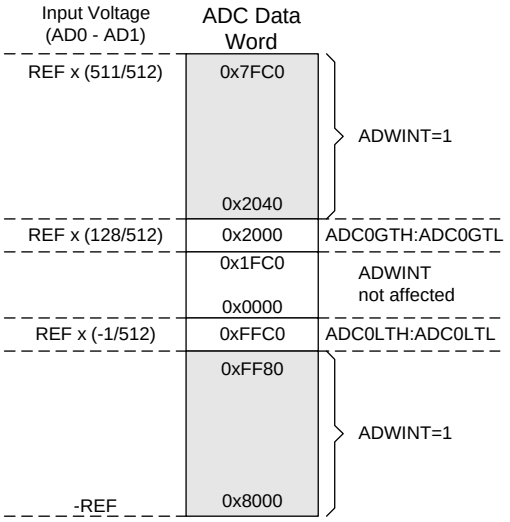

Given:

AMX0SL = 0x00, AMX0CF = 0x01, ADLJST = 1,
ADC0LTH:ADC0LTH = 0xFFC0,
ADC0GTH:ADC0GTL = 0x2000.

An ADC End of Conversion will cause an ADC Window Compare Interrupt (ADWINT=1) if the resulting ADC Data Word is < 0xFFC0 or > 0x2000. (Two's Complement math.)

Table 6.1. 10-Bit ADC Electrical Characteristics

VDD = 3.0V, AV+ = 3.0V, VREF = 2.40V (REFBE=0), PGA Gain = 1, -40°C to +85°C unless otherwise specified.

PARAMETER	CONDITIONS	MIN	TYP	MAX	UNITS
DC ACCURACY					
Resolution			10		bits
Integral Nonlinearity			± ½	± 1	LSB
Differential Nonlinearity	Guaranteed Monotonic		± ½	± 1	LSB
Offset Error			± 0.5		LSB
Full Scale Error	Differential mode		-1.5 ± 0.5		LSB
Offset Temperature Coefficient			± 0.25		ppm/°C
DYNAMIC PERFORMANCE (10kHz sine-wave input, 0 to –1dB of full scale, 100ksps)					
Signal-to-Noise Plus Distortion		59	61		dB
Total Harmonic Distortion	Up to the 5th harmonic		-70		dB
Spurious-Free Dynamic Range			80		dB
CONVERSION RATE					
Conversion Time in SAR Clocks		16			clocks
SAR Clock Frequency	C8051F000, ‘F001, ‘F002 C8051F005, ‘F006, ‘F007			2.0 2.5	MHz MHz
Track/Hold Acquisition Time		1.5			µs
Throughput Rate				100	ksps
ANALOG INPUTS					
Voltage Conversion Range	Single-ended Mode (AINn – AGND) Differential Mode |(AINn+) – (AINm-)|	0		VREF - 1LSB	V
Input Voltage	Any AINn pin	AGND		AV+	V
Input Capacitance			10		pF
TEMPERATURE SENSOR					
Linearity			± 0.20		°C
Absolute Accuracy			± 3		°C
Gain	PGA Gain = 1		2.86		mV/°C
Gain Error (±1σ)	PGA Gain = 1		± 33.5		µV/°C
Offset	PGA Gain = 1, Temp = 0°C		776		mV
Offset Error (±1σ)	PGA Gain = 1, Temp = 0°C		± 8.51		mV
POWER SPECIFICATIONS					
Power Supply Current (AV+ supplied to ADC)	Operating Mode, 100ksps		450	900	µA
Power Supply Rejection			± 0.3		mV/V

7. DACs, 12 BIT VOLTAGE MODE

The C8051F000 MCU family has two 12-bit voltage-mode Digital to Analog Converters. Each DAC has an output swing of 0V to VREF-1LSB for a corresponding input code range of 0x000 to 0xFFF. Using DAC0 as an example, the 12-bit data word is written to the low byte (DAC0L) and high byte (DAC0H) data registers. Data is latched into DAC0 after a write to the corresponding DAC0H register, **so the write sequence should be DAC0L followed by DAC0H** if the full 12-bit resolution is required. The DAC can be used in 8-bit mode by initializing DAC0L to the desired value (typically 0x00), and writing data to only DAC0H with the data shifted to the left. DAC0 Control Register (DAC0CN) provides a means to enable/disable DAC0 and to modify its input data formatting.

The DAC0 enable/disable function is controlled by the DAC0EN bit (DAC0CN.7). Writing a 1 to DAC0EN enables DAC0 while writing a 0 to DAC0EN disables DAC0. While disabled, the output of DAC0 is maintained in a high-impedance state, and the DAC0 supply current falls to 1µA or less. Also, the Bias Enable bit (BIASE) in the REF0CN register (see Figure 9.2) must be set to 1 in order to supply bias to DAC0. The voltage reference for DAC0 must also be set properly (see Section 9).

In some instances, input data should be shifted prior to a DAC0 write operation to properly justify data within the DAC input registers. This action would typically require one or more load and shift operations, adding software overhead and slowing DAC throughput. To alleviate this problem, the data-formatting feature provides a means for the user to program the orientation of the DAC0 data word within data registers DAC0H and DAC0L. The three DAC0DF bits (DAC0CN.[2:0]) allow the user to specify one of five data word orientations as shown in the DAC0CN register definition.

DAC1 is functionally the same as DAC0 described above. The electrical specifications for both DAC0 and DAC1 are given in Table 7.1.

Figure 7.1. DAC Functional Block Diagram

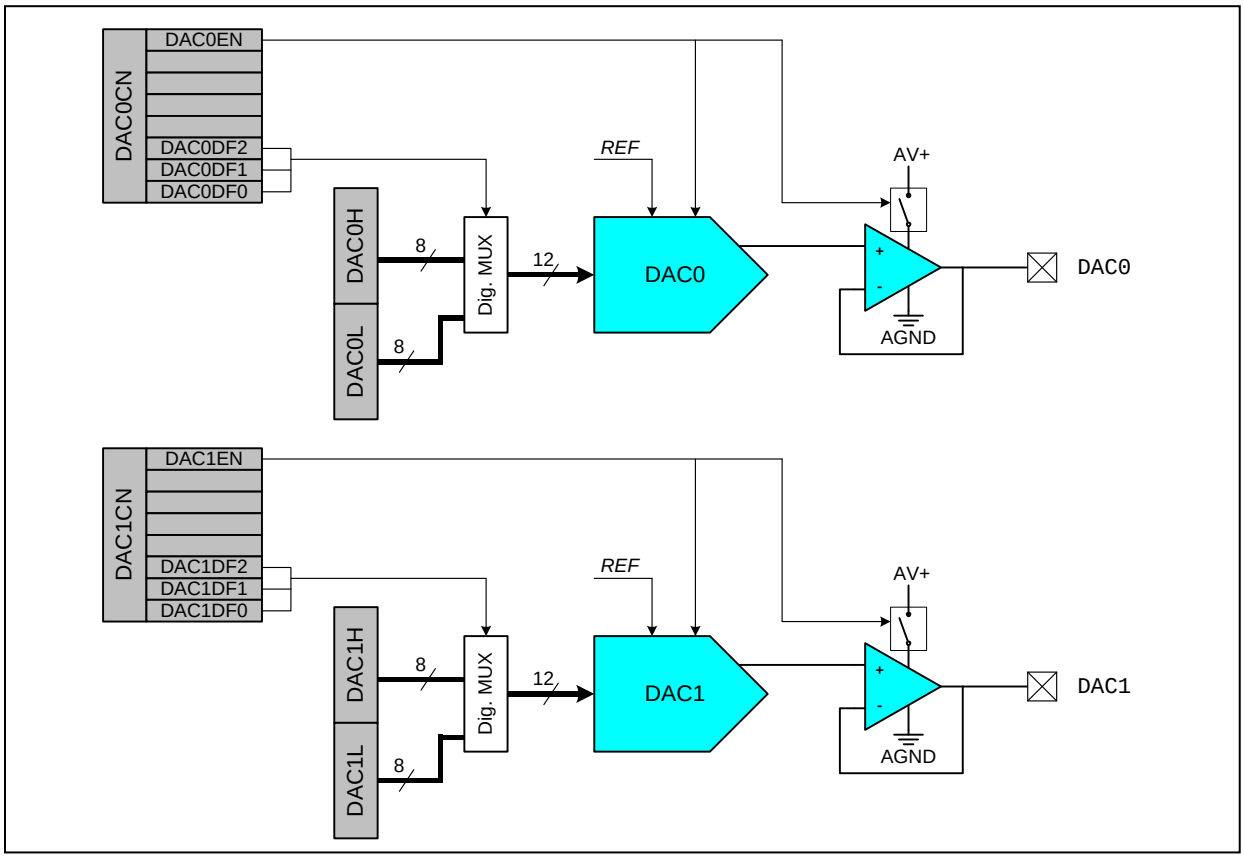

Figure 7.2. DAC0H: DAC0 High Byte Register

R/W	R/W	R/W	R/W	R/W	R/W	R/W	R/W	Reset Value
								00000000
Bit7	Bit6	Bit5	Bit4	Bit3	Bit2	Bit1	Bit0	SFR Address: 0xD3

Bits7-0: DAC0 Data Word Most Significant Byte.

Figure 7.3. DAC0L: DAC0 Low Byte Register

R/W	R/W	R/W	R/W	R/W	R/W	R/W	R/W	Reset Value
								00000000
Bit7	Bit6	Bit5	Bit4	Bit3	Bit2	Bit1	Bit0	SFR Address: 0xD2

Bits7-0: DAC0 Data Word Least Significant Byte.

Figure 7.4. DAC0CN: DAC0 Control Register

R/W	R/W	R/W	R/W	R/W	R/W	R/W	R/W	Reset Value
DAC0EN	-	-	-	-	DAC0DF2	DAC0DF1	DAC0DF0	00000000
Bit7	Bit6	Bit5	Bit4	Bit3	Bit2	Bit1	Bit0	SFR Address: 0xD4

Bit7: DAC0EN: DAC0 Enable Bit
0: DAC0 Disabled. DAC0 Output pin is disabled; DAC0 is in low power shutdown mode.
1: DAC0 Enabled. DAC0 Output is pin active; DAC0 is operational.

Bits6-3: UNUSED. Read = 0000b; Write = don't care

Bits2-0: DAC0DF2-0: DAC0 Data Format Bits

000: The most significant nybble of the DAC0 Data Word is in DAC0H[3:0], while the least significant byte is in DAC0L.

DAC0H								DAC0L							
				MSB											LSB

001: The most significant 5-bits of the DAC0 Data Word is in DAC0H[4:0], while the least significant 7-bits is in DAC0L[7:1].

DAC0H								DAC0L							
			MSB											LSB	

010: The most significant 6-bits of the DAC0 Data Word is in DAC0H[5:0], while the least significant 6-bits is in DAC0L[7:2].

DAC0H								DAC0L							
		MSB											LSB		

011: The most significant 7-bits of the DAC0 Data Word is in DAC0H[6:0], while the least significant 5-bits is in DAC0L[7:3].

DAC0H								DAC0L							
	MSB											LSB			

1xx: The most significant byte of the DAC0 Data Word is in DAC0H, while the least significant nybble is in DAC0L[7:4].

DAC0H								DAC0L							
MSB											LSB				

Figure 7.5. DAC1H: DAC1 High Byte Register

R/W	R/W	R/W	R/W	R/W	R/W	R/W	R/W	Reset Value
								00000000
Bit7	Bit6	Bit5	Bit4	Bit3	Bit2	Bit1	Bit0	SFR Address: 0xD6

Bits7-0: DAC1 Data Word Most Significant Byte.

Figure 7.6. DAC1L: DAC1 Low Byte Register

R/W	R/W	R/W	R/W	R/W	R/W	R/W	R/W	Reset Value
								00000000
Bit7	Bit6	Bit5	Bit4	Bit3	Bit2	Bit1	Bit0	SFR Address: 0xD5

Bits7-0: DAC1 Data Word Least Significant Byte.

Figure 7.7. DAC1CN: DAC1 Control Register

R/W	R/W	R/W	R/W	R/W	R/W	R/W	R/W	Reset Value
DAC1EN	-	-	-	-	DAC1DF2	DAC1DF1	DAC1DF0	00000000
Bit7	Bit6	Bit5	Bit4	Bit3	Bit2	Bit1	Bit0	SFR Address: 0xD7

Bit7: DAC1EN: DAC1 Enable Bit
0: DAC1 Disabled. DAC1 Output pin is disabled; DAC1 is in low power shutdown mode.
1: DAC1 Enabled. DAC1 Output is pin active; DAC1 is operational.

Bits6-3: UNUSED. Read = 0000b; Write = don't care

Bits2-0: DAC1DF2-0: DAC1 Data Format Bits

000: The most significant nybble of the DAC1 Data Word is in DAC1H[3:0], while the least significant byte is in DAC1L.

DAC1H								DAC1L							
				MSB											LSB

001: The most significant 5-bits of the DAC1 Data Word is in DAC1H[4:0], while the least significant 7-bits is in DAC1L[7:1].

DAC1H								DAC1L							
			MSB											LSB	

010: The most significant 6-bits of the DAC1 Data Word is in DAC1H[5:0], while the least significant 6-bits is in DAC1L[7:2].

DAC1H								DAC1L							
		MSB											LSB		

011: The most significant 7-bits of the DAC1 Data Word is in DAC1H[6:0], while the least significant 5-bits is in DAC1L[7:3].

DAC1H								DAC1L							
	MSB											LSB			

1xx: The most significant byte of the DAC1 Data Word is in DAC1H, while the least significant nybble is in DAC1L[7:4].

DAC1H								DAC1L							
MSB											LSB				

Table 7.1. DAC Electrical Characteristics

VDD = 3.0V, AV+ = 3.0V, REF = 2.40V (REFBE=0), No Output Load unless otherwise specified.

PARAMETER	CONDITIONS	MIN	TYP	MAX	UNITS
STATIC PERFORMANCE					
Resolution			12		bits
Integral Nonlinearity	For Data Word Range 0x014 to 0xFEB		±2		LSB
Differential Nonlinearity	Guaranteed Monotonic (codes 0x014 to 0xFEB)			±1	LSB
Output Noise	No Output Filter 100kHz Output Filter 10kHz Output Filter		250 128 41		µVrms
Offset Error	Data Word = 0x014		±3	±30	mV
Offset Tempco			6		ppm/°C
Full-Scale Error			±20	±60	mV
Full-Scale Error Tempco			10		ppm/°C
VDD Power-Supply Rejection Ratio			-60		dB
Output Impedance in Shutdown Mode	DACnEN=0		100		kΩ
Output Current			±300		µA
Output Short Circuit Current	Data Word = 0xFFF		15		mA
DYNAMIC PERFORMANCE					
Voltage Output Slew Rate	Load = 40pF		0.44		V/µs
Output Settling Time To ½ LSB	Load = 40pF, Output swing from code 0xFFF to 0x014		10		µs
Output Voltage Swing		0		REF-1LSB	V
Startup Time	DAC Enable asserted		10		µs
ANALOG OUTPUTS					
Load Regulation	I_L = 0.01mA to 0.3mA at code 0xFFF		60		ppm
CURRENT CONSUMPTION (each DAC)					
Power Supply Current (AV+ supplied to DAC)	Data Word = 0x7FF		110	400	µA

8. COMPARATORS

The MCU family has two on-chip analog voltage comparators as shown in Figure 8.1. The inputs of each Comparator are available at the package pins. The output of each comparator is optionally available at the package pins via the I/O crossbar (see Section 15.1). When assigned to package pins, each comparator output can be programmed to operate in open drain or push-pull modes (see section 15.3).

The hysteresis of each comparator is software-programmable via its respective Comparator control register (CPT0CN, CPT1CN). The user can program both the amount of hysteresis voltage (referred to the input voltage) and the positive and negative-going symmetry of this hysteresis around the threshold voltage. The output of the comparator can be polled in software, or can be used as an interrupt source. Each comparator can be individually enabled or disabled (shutdown). When disabled, the comparator output (if assigned to a Port I/O pin via the Crossbar) defaults to the logic low state, its interrupt capability is suspended and its supply current falls to less than 1µA. Comparator 0 inputs can be externally driven from -0.25V to (AV+) + 0.25V without damage or upset.

The Comparator 0 hysteresis is programmed using bits 3-0 in the Comparator 0 Control Register CPT0CN (shown in Figure 8.3). The amount of *negative* hysteresis voltage is determined by the settings of the CP0HYN bits. As shown in Figure 8.2, settings of 10, 4 or 2mV of negative hysteresis can be programmed, or negative hysteresis can be disabled. In a similar way, the amount of *positive* hysteresis is determined by the setting the CP0HYP bits.

Comparator interrupts can be generated on both rising-edge and falling-edge output transitions. (For Interrupt enable and priority control, see Section 10.4). The CP0FIF flag is set upon a Comparator 0 falling-edge interrupt, and the CP0RIF flag is set upon the Comparator 0 rising-edge interrupt. Once set, these bits remain set until cleared by the CPU. The Output State of Comparator 0 can be obtained at any time by reading the CP0OUT bit. Note the comparator output and interrupt should be ignored until the comparator settles after power-up. Comparator 0 is enabled by setting the CP0EN bit, and is disabled by clearing this bit. Note there is a 20usec settling time for the comparator output to stabilize after setting the CP0EN bit or a power-up. Comparator 0 can also be programmed as a reset source. For details, see Section 13.

The operation of Comparator 1 is identical to that of Comparator 0, except the Comparator 1 is controlled by the CPT1CN Register (Figure 8.4). Comparator 1 can not be programmed as a reset source. Also, the input pins for Comparator 1 are not pinned out on the F002, F007, F012, or F017 devices. The complete electrical specifications for the Comparators are given in Table 8.1.

Figure 8.1. Comparator Functional Block Diagram

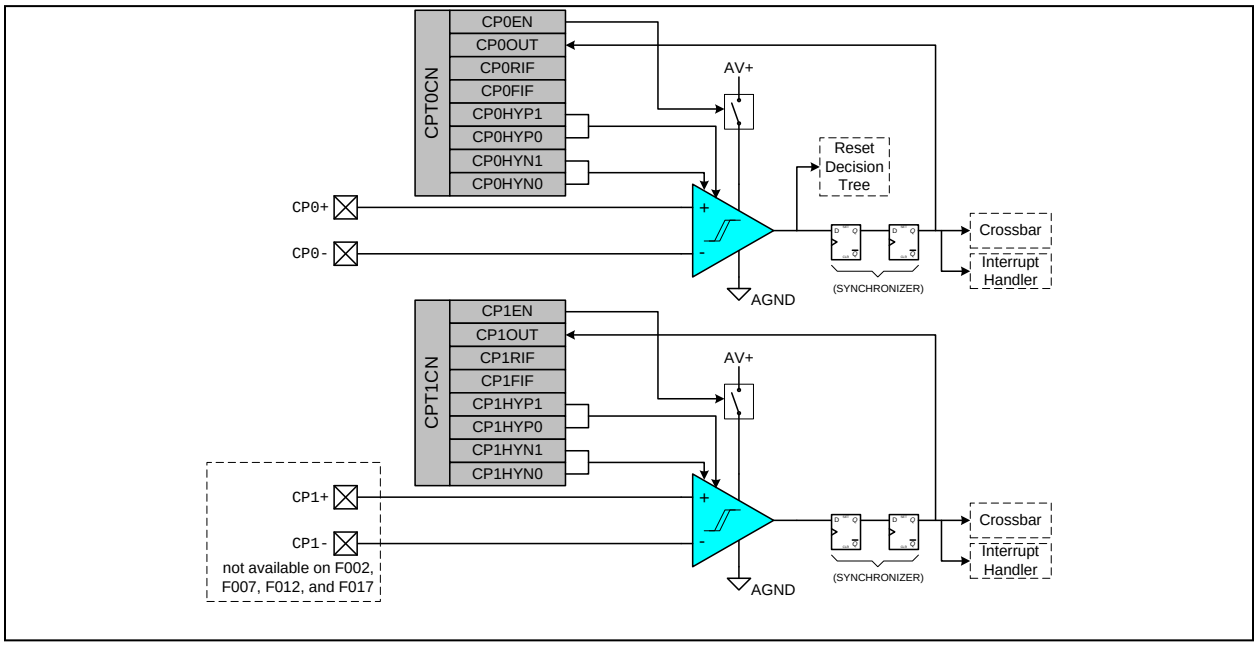

Figure 8.2. Comparator Hysteresis Plot

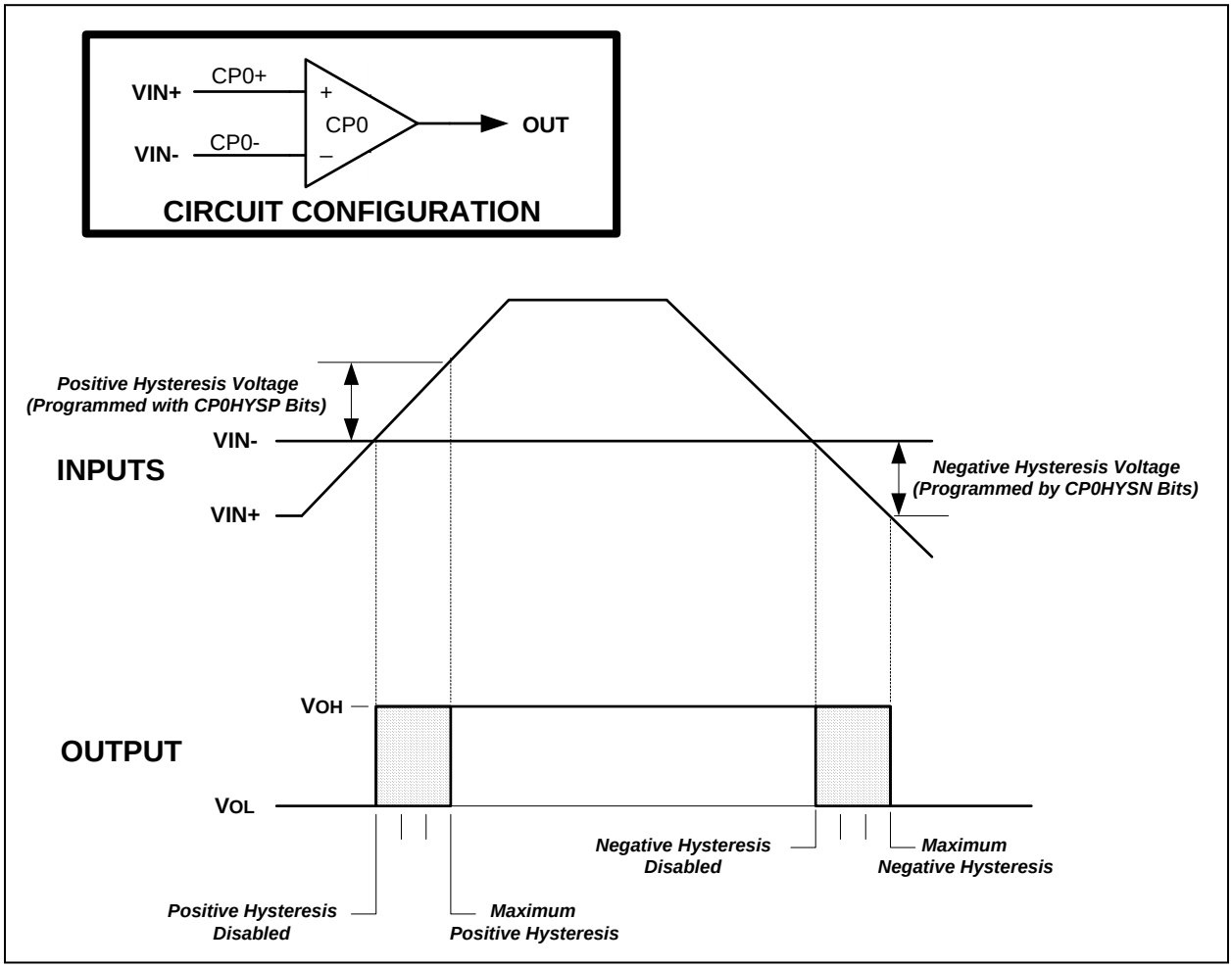

Figure 8.3. CPT0CN: Comparator 0 Control Register

R/W	R	R/W	R/W	R/W	R/W	R/W	R/W	Reset Value
CP0EN	CP0OUT	CP0RIF	CP0FIF	CP0HYP1	CP0HYP0	CP0HYN1	CP0HYN0	00000000
Bit7	Bit6	Bit5	Bit4	Bit3	Bit2	Bit1	Bit0	SFR Address: 0x9E

Bit7: CP0EN: Comparator 0 Enable Bit
0: Comparator 0 Disabled.
1: Comparator 0 Enabled.

Bit6: CP0OUT: Comparator 0 Output State Flag
0: Voltage on CP0+ < CP0-
1: Voltage on CP0+ > CP0-

Bit5: CP0RIF: Comparator 0 Rising-Edge Interrupt Flag
0: No Comparator 0 Rising-Edge Interrupt has occurred since this flag was cleared
1: Comparator 0 Rising-Edge Interrupt has occurred since this flag was cleared

Bit4: CP0FIF: Comparator 0 Falling-Edge Interrupt Flag
0: No Comparator 0 Falling-Edge Interrupt has occurred since this flag was cleared
1: Comparator 0 Falling-Edge Interrupt has occurred since this flag was cleared

Bit3-2: CP0HYP1-0: Comparator 0 Positive Hysteresis Control Bits
00: Positive Hysteresis Disabled
01: Positive Hysteresis = 2mV
10: Positive Hysteresis = 4mV
11: Positive Hysteresis = 10mV

Bit1-0: CP0HYN1-0: Comparator 0 Negative Hysteresis Control Bits
00: Negative Hysteresis Disabled
01: Negative Hysteresis = 2mV
10: Negative Hysteresis = 4mV
11: Negative Hysteresis = 10mV

Figure 8.4. CPT1CN: Comparator 1 Control Register

R/W	R	R/W	R/W	R/W	R/W	R/W	R/W	Reset Value
CP1EN	CP1OUT	CP1RIF	CP1FIF	CP1HYP1	CP1HYP0	CP1HYN1	CP1HYN0	00000000
Bit7	Bit6	Bit5	Bit4	Bit3	Bit2	Bit1	Bit0	SFR Address: 0x9F

Bit7: CP1EN: Comparator 1 Enable Bit
0: Comparator 1 Disabled.
1: Comparator 1 Enabled.

Bit6: CP1OUT: Comparator 1 Output State Flag
0: Voltage on CP1+ < CP1-
1: Voltage on CP1+ > CP1-

Bit5: CP1RIF: Comparator 1 Rising-Edge Interrupt Flag
0: No Comparator 1 Rising-Edge Interrupt has occurred since this flag was cleared
1: Comparator 1 Rising-Edge Interrupt has occurred since this flag was cleared

Bit4: CP1FIF: Comparator 1 Falling-Edge Interrupt Flag
0: No Comparator 1 Falling-Edge Interrupt has occurred since this flag was cleared
1: Comparator 1 Falling-Edge Interrupt has occurred since this flag was cleared

Bit3-2: CP1HYP1-0: Comparator 1 Positive Hysteresis Control Bits
00: Positive Hysteresis Disabled
01: Positive Hysteresis = 2mV
10: Positive Hysteresis = 4mV
11: Positive Hysteresis = 10mV

Bit1-0: CP1HYN1-0: Comparator 1 Negative Hysteresis Control Bits
00: Negative Hysteresis Disabled
01: Negative Hysteresis = 2mV
10: Negative Hysteresis = 4mV
11: Negative Hysteresis = 10mV

Table 8.1. Comparator Electrical Characteristics

VDD = 3.0V, AV+ = 3.0V, -40°C to +85°C unless otherwise specified.

PARAMETER	CONDITIONS	MIN	TYP	MAX	UNITS
Response Time1	(CP+) – (CP-) = 100mV (Note 1)		4		µs
Response Time2	(CP+) – (CP-) = 10mV (Note 1)		12		µs
Common Mode Rejection Ratio			1.5	4	mV/V
Positive Hysteresis1	CPnHYP1-0 = 00		0	1	mV
Positive Hysteresis2	CPnHYP1-0 = 01	2	4.5	7	mV
Positive Hysteresis3	CPnHYP1-0 = 10	4	9	13	mV
Positive Hysteresis4	CPnHYP1-0 = 11	10	17	25	mV
Negative Hysteresis1	CPnHYN1-0 = 00		0	1	mV
Negative Hysteresis2	CPnHYN1-0 = 01	2	4.5	7	mV
Negative Hysteresis3	CPnHYN1-0 = 10	4	9	13	mV
Negative Hysteresis4	CPnHYN1-0 = 11	10	17	25	mV
Inverting or Non-inverting Input Voltage Range		-0.25		(AV+) + 0.25	V
Input Capacitance			7		pF
Input Bias Current		-5	0.001	+5	nA
Input Offset Voltage		-10		+10	mV
POWER SUPPLY					
Power-up Time	CPnEN from 0 to 1		20		µs
Power Supply Rejection			0.1	1	mV/V
Supply Current	Operating Mode (each comparator) at DC		1.5	10	µA

Note 1: CPnHYP1-0 = CPnHYN1-0 = 00.

9. VOLTAGE REFERENCE

The voltage reference circuit consists of a 1.2V, 15ppm/°C (typical) bandgap voltage reference generator and a gain-of-two output buffer amplifier. The reference voltage on VREF can be connected to external devices in the system, as long as the maximum load seen by the VREF pin is less than 200µA to AGND (see Figure 9.1).

If a different reference voltage is required, an external reference can be connected to the VREF pin and the internal bandgap and buffer amplifier disabled in software. The external reference voltage must still be less than AV+ - 0.3V. The Reference Control Register, REF0CN (defined in Figure 9.2), provides the means to enable or disable the bandgap and buffer amplifier. The BIASE bit in REF0CN enables the bias circuitry for the ADC and DACs while the REFBE bit enables the bandgap reference and buffer amplifier which drive the VREF pin. When disabled, the supply current drawn by the bandgap and buffer amplifier falls to less than 1uA (typical) and the output of the buffer amplifier enters a high impedance state. If the internal bandgap is used as the reference voltage generator, BIASE and REFBE must both be set to 1. If an external reference is used, REFBE must be set to 0 and BIASE must be set to 1. If neither the ADC nor the DAC are being used, both of these bits can be set to 0 to conserve power. The electrical specifications for the Voltage Reference are given in Table 9.1.

The temperature sensor connects to the highest order input of the A/D converter's input multiplexer (see Figure 5.1 and Figure 5.5 for details). The TEMPE bit within REF0CN enables and disables the temperature sensor. While disabled, the temperature sensor defaults to a high impedance state and any A/D measurements performed on the sensor while disabled result in meaningless data.

Figure 9.1. Voltage Reference Functional Block Diagram

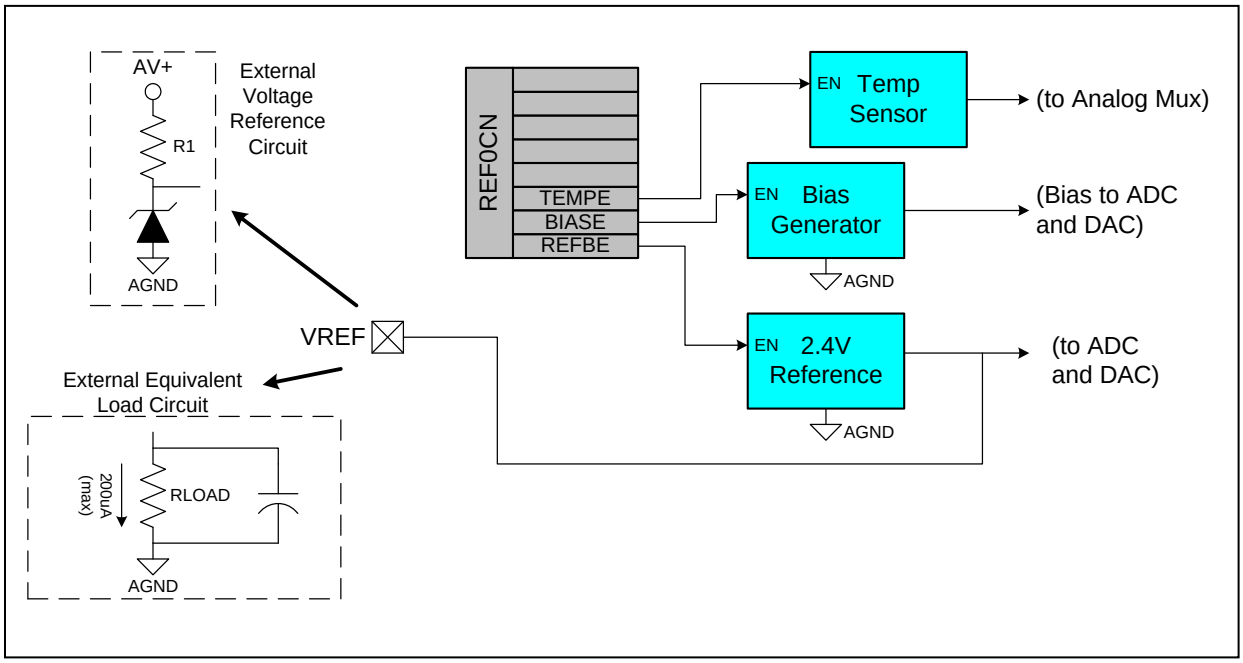

Figure 9.2. REF0CN: Reference Control Register

R/W	R/W	R/W	R/W	R/W	R/W	R/W	R/W	Reset Value
-	-	-	-	-	TEMPE	BIASE	REFBE	00000000
Bit7	Bit6	Bit5	Bit4	Bit3	Bit2	Bit1	Bit0	SFR Address: 0xD1

Bits7-3: UNUSED. Read = 00000b; Write = don't care
Bit2: TEMPE: Temperature Sensor Enable Bit
0: Internal Temperature Sensor Off.
1: Internal Temperature Sensor On.
Bit1: BIASE: Bias Enable Bit for ADC and DAC's
0: Internal Bias Off.
1: Internal Bias On (required for use of ADC or DAC's).
Bit0: REFBE: Internal Voltage Reference Buffer Enable Bit
0: Internal Reference Buffer Off. System reference can be driven from external source on VREF pin.
1: Internal Reference Buffer On. System reference provided by internal voltage reference.

Table 9.1. Reference Electrical Characteristics

VDD = 3.0V, AV+ = 3.0V, -40°C to +85°C unless otherwise specified.

PARAMETER	CONDITIONS	MIN	TYP	MAX	UNITS
INTERNAL REFERENCE (REFBE = 1)					
Output Voltage	25°C ambient	2.34	2.43	2.50	V
VREF Short Circuit Current				30	mA
VREF Power Supply Current (supplied by AV+)			50		µA
VREF Temperature Coefficient			15		ppm/°C
Load Regulation	Load = (0-to-200µA) to AGND (Note 1)		0.5		ppm/µA
VREF Turn-on Time1	4.7µF tantalum, 0.1µF ceramic bypass		2		ms
VREF Turn-on Time2	0.1µF ceramic bypass		20		µs
VREF Turn-on Time3	no bypass cap		10		µs
EXTERNAL REFERENCE (REFBE = 0)					
Input Voltage Range		1.00		(AV+) – 0.3V	V
Input Current			0	1	µA

Note 1: The reference can only source current. When driving an external load, it is recommended to add a load resistor to AGND.

10. CIP-51 CPU

The MCUs' system CPU is the CIP-51. The CIP-51 is fully compatible with the MCS-51™ instruction set. Standard 803x/805x assemblers and compilers can be used to develop software. The MCU family has a superset of all the peripherals included with a standard 8051. Included are four 16-bit counter/timers (see description in Section 19), a full-duplex UART (see description in Section 18), 256 bytes of internal RAM, 128 byte Special Function Register (SFR) address space (see Section 10.3), and four byte-wide I/O Ports (see description in Section 14). The CIP-51 also includes on-chip debug hardware (see description in Section 21), and interfaces directly with the MCUs' analog and digital subsystems providing a complete data acquisition or control-system solution in a single integrated circuit.

Features

The CIP-51 Microcontroller core implements the standard 8051 organization and peripherals as well as additional custom peripherals and functions to extend its capability (see Figure 10.1 for a block diagram). The CIP-51 includes the following features:

- Fully Compatible with MCS-51 Instruction Set
- 25 MIPS Peak Throughput with 25MHz Clock
- 0 to 25MHz Clock Frequency (on 'F0x5/6/7)
- Four Byte-Wide I/O Ports
- Extended Interrupt Handler
- Reset Input
- Power Management Modes
- On-chip Debug Circuitry
- Program and Data Memory Security

Figure 10.1. CIP-51 Block Diagram

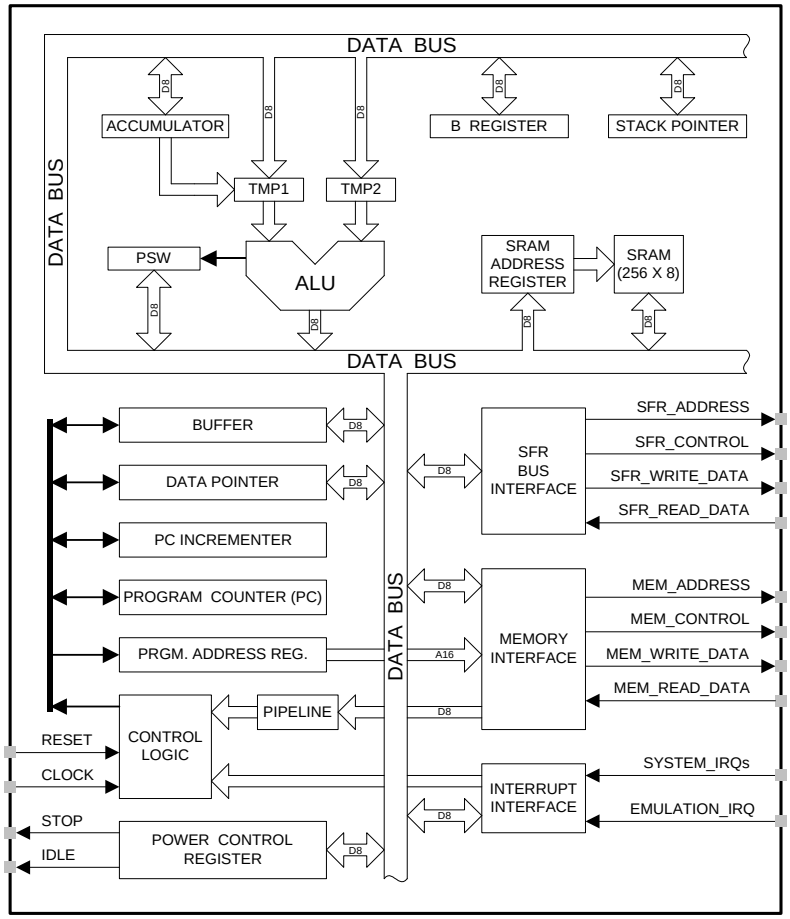

Performance

The CIP-51 employs a pipelined architecture that greatly increases its instruction throughput over the standard 8051 architecture. In a standard 8051, all instructions except for MUL and DIV take 12 or 24 system clock cycles to execute, and usually have a maximum system clock of 12MHz. By contrast, the CIP-51 core executes 70% of its instructions in one or two system clock cycles, with no instructions taking more than eight system clock cycles.

With the CIP-51's maximum system clock at 25MHz, it has a peak throughput of 25MIPS. The CIP-51 has a total of 109 instructions. The number of instructions versus the system clock cycles required to execute them is as follows:

Instructions	26	50	5	14	7	3	1	2	1
Clocks to Execute	1	2	2/3	3	3/4	4	4/5	5	8

Programming and Debugging Support

A JTAG-based serial interface is provided for in-system programming of the Flash program memory and communication with on-chip debug support circuitry. The reprogrammable Flash can also be read and changed a single byte at a time by the application software using the MOVC and MOVX instructions. This feature allows program memory to be used for non-volatile data storage as well as updating program code under software control.

The on-chip debug support circuitry facilitates full speed in-circuit debugging, allowing the setting of hardware breakpoints and watch points, starting, stopping and single stepping through program execution (including interrupt service routines), examination of the program's call stack, and reading/writing the contents of registers and memory. This method of on-chip debugging is completely non-intrusive and non-invasive, requiring no RAM, Stack, timers, or other on-chip resources.

The CIP-51 is supported by development tools from Silicon Laboratories and third party vendors. Silicon Labs provides an integrated development environment (IDE) including editor, macro assembler, debugger and programmer. The IDE's debugger and programmer interface to the CIP-51 via its JTAG interface to provide fast and efficient in-system device programming and debugging. Third party macro assemblers and C compilers are also available.

10.1. INSTRUCTION SET

The instruction set of the CIP-51 System Controller is fully compatible with the standard MCS-51™ instruction set. Standard 8051 development tools can be used to develop software for the CIP-51. All CIP-51 instructions are the binary and functional equivalent of their MCS-51™ counterparts, including opcodes, addressing modes and effect on PSW flags. However, instruction timing is different than that of the standard 8051.

10.1.1. Instruction and CPU Timing

In many 8051 implementations, a distinction is made between machine cycles and clock cycles, with machine cycles varying from 2 to 12 clock cycles in length. However, the CIP-51 implementation is based solely on clock cycle timing. All instruction timings are specified in terms of clock cycles.

Due to the pipelined architecture of the CIP-51, most instructions execute in the same number of clock cycles as there are program bytes in the instruction. Conditional branch instructions take one less clock cycle to complete when the branch is not taken as opposed to when the branch is taken. Table 10.1 is the CIP-51 Instruction Set Summary, which includes the mnemonic, number of bytes, and number of clock cycles for each instruction.

10.1.2. MOVX Instruction and Program Memory

The MOVX instruction is typically used to access external data memory. In the CIP-51, the MOVX instruction can access the on-chip program memory space implemented as reprogrammable Flash memory using the control bits in the PSCTL register (see Figure 11.1). This feature provides a mechanism for the CIP-51 to update program code and use the program memory space for non-volatile data storage. For the products with RAM mapped into external data memory space (C8051F005/06/07/15/16/17), MOVX is still used to read/write this memory with the PSCTL

register configured for accessing the external data memory space. Refer to Section 11 (Flash Memory) for further details.

Table 10.1. CIP-51 Instruction Set Summary

Mnemonic	Description	Bytes	Clock Cycles
ARITHMETIC OPERATIONS			
ADD A,Rn	Add register to A	1	1
ADD A,direct	Add direct byte to A	2	2
ADD A,@Ri	Add indirect RAM to A	1	2
ADD A,#data	Add immediate to A	2	2
ADDC A,Rn	Add register to A with carry	1	1
ADDC A,direct	Add direct byte to A with carry	2	2
ADDC A,@Ri	Add indirect RAM to A with carry	1	2
ADDC A,#data	Add immediate to A with carry	2	2
SUBB A,Rn	Subtract register from A with borrow	1	1
SUBB A,direct	Subtract direct byte from A with borrow	2	2
SUBB A,@Ri	Subtract indirect RAM from A with borrow	1	2
SUBB A,#data	Subtract immediate from A with borrow	2	2
INC A	Increment A	1	1
INC Rn	Increment register	1	1
INC direct	Increment direct byte	2	2
INC @Ri	Increment indirect RAM	1	2
DEC A	Decrement A	1	1
DEC Rn	Decrement register	1	1
DEC direct	Decrement direct byte	2	2
DEC @Ri	Decrement indirect RAM	1	2
INC DPTR	Increment Data Pointer	1	1
MUL AB	Multiply A and B	1	4
DIV AB	Divide A by B	1	8
DA A	Decimal Adjust A	1	1
LOGICAL OPERATIONS			
ANL A,Rn	AND Register to A	1	1
ANL A,direct	AND direct byte to A	2	2
ANL A,@Ri	AND indirect RAM to A	1	2
ANL A,#data	AND immediate to A	2	2
ANL direct,A	AND A to direct byte	2	2
ANL direct,#data	AND immediate to direct byte	3	3
ORL A,Rn	OR Register to A	1	1
ORL A,direct	OR direct byte to A	2	2
ORL A,@Ri	OR indirect RAM to A	1	2
ORL A,#data	OR immediate to A	2	2
ORL direct,A	OR A to direct byte	2	2
ORL direct,#data	OR immediate to direct byte	3	3
XRL A,Rn	Exclusive-OR Register to A	1	1
XRL A,direct	Exclusive-OR direct byte to A	2	2
XRL A,@Ri	Exclusive-OR indirect RAM to A	1	2
XRL A,#data	Exclusive-OR immediate to A	2	2
XRL direct,A	Exclusive-OR A to direct byte	2	2
XRL direct,#data	Exclusive-OR immediate to direct byte	3	3
CLR A	Clear A	1	1
CPL A	Complement A	1	1
RL A	Rotate A left	1	1
RLC A	Rotate A left through carry	1	1
RR A	Rotate A right	1	1

Mnemonic	Description	Bytes	Clock Cycles
RRC A	Rotate A right through carry	1	1
SWAP A	Swap nibbles of A	1	1
DATA TRANSFER			
MOV A,Rn	Move register to A	1	1
MOV A,direct	Move direct byte to A	2	2
MOV A,@Ri	Move indirect RAM to A	1	2
MOV A,#data	Move immediate to A	2	2
MOV Rn,A	Move A to register	1	1
MOV Rn,direct	Move direct byte to register	2	2
MOV Rn,#data	Move immediate to register	2	2
MOV direct,A	Move A to direct byte	2	2
MOV direct,Rn	Move register to direct byte	2	2
MOV direct,direct	Move direct byte to direct	3	3
MOV direct,@Ri	Move indirect RAM to direct byte	2	2
MOV direct,#data	Move immediate to direct byte	3	3
MOV @Ri,A	Move A to indirect RAM	1	2
MOV @Ri,direct	Move direct byte to indirect RAM	2	2
MOV @Ri,#data	Move immediate to indirect RAM	2	2
MOV DPTR,#data16	Load data pointer with 16-bit constant	3	3
MOVC A,@A+DPTR	Move code byte relative DPTR to A	1	3
MOVC A,@A+PC	Move code byte relative PC to A	1	3
MOVX A,@Ri	Move external data (8-bit address) to A	1	3
MOVX @Ri,A	Move A to external data (8-bit address)	1	3
MOVX A,@DPTR	Move external data (16-bit address) to A	1	3
MOVX @DPTR,A	Move A to external data (16-bit address)	1	3
PUSH direct	Push direct byte onto stack	2	2
POP direct	Pop direct byte from stack	2	2
XCH A,Rn	Exchange register with A	1	1
XCH A,direct	Exchange direct byte with A	2	2
XCH A,@Ri	Exchange indirect RAM with A	1	2
XCHD A,@Ri	Exchange low nibble of indirect RAM with A	1	2
BOOLEAN MANIPULATION			
CLR C	Clear carry	1	1
CLR bit	Clear direct bit	2	2
SETB C	Set carry	1	1
SETB bit	Set direct bit	2	2
CPL C	Complement carry	1	1
CPL bit	Complement direct bit	2	2
ANL C,bit	AND direct bit to carry	2	2
ANL C,/bit	AND complement of direct bit to carry	2	2
ORL C,bit	OR direct bit to carry	2	2
ORL C,/bit	OR complement of direct bit to carry	2	2
MOV C,bit	Move direct bit to carry	2	2
MOV bit,C	Move carry to direct bit	2	2
JC rel	Jump if carry is set	2	2/3
JNC rel	Jump if carry not set	2	2/3
JB bit,rel	Jump if direct bit is set	3	3/4
JNB bit,rel	Jump if direct bit is not set	3	3/4
JBC bit,rel	Jump if direct bit is set and clear bit	3	3/4
PROGRAM BRANCHING			

Mnemonic	Description	Bytes	Clock Cycles
ACALL addr11	Absolute subroutine call	2	3
LCALL addr16	Long subroutine call	3	4
RET	Return from subroutine	1	5
RETI	Return from interrupt	1	5
AJMP addr11	Absolute jump	2	3
LJMP addr16	Long jump	3	4
SJMP rel	Short jump (relative address)	2	3
JMP @A+DPTR	Jump indirect relative to DPTR	1	3
JZ rel	Jump if A equals zero	2	2/3
JNZ rel	Jump if A does not equal zero	2	2/3
CJNE A,direct,rel	Compare direct byte to A and jump if not equal	3	3/4
CJNE A,#data,rel	Compare immediate to A and jump if not equal	3	3/4
CJNE Rn,#data,rel	Compare immediate to register and jump if not equal	3	3/4
CJNE @Ri,#data,rel	Compare immediate to indirect and jump if not equal	3	4/5
DJNZ Rn,rel	Decrement register and jump if not zero	2	2/3
DJNZ direct,rel	Decrement direct byte and jump if not zero	3	3/4
NOP	No operation	1	1

Notes on Registers, Operands and Addressing Modes:

Rn - Register R0-R7 of the currently selected register bank.

@Ri - Data RAM location addressed indirectly through register R0-R1

rel - 8-bit, signed (two's compliment) offset relative to the first byte of the following instruction. Used by SJMP and all conditional jumps.

direct - 8-bit internal data location's address. This could be a direct-access Data RAM location (0x00-0x7F) or an SFR (0x80-0xFF).

#data - 8-bit constant

#data 16 - 16-bit constant

bit - Direct-addressed bit in Data RAM or SFR.

addr 11 - 11-bit destination address used by ACALL and AJMP. The destination must be within the same 2K-byte page of program memory as the first byte of the following instruction.

addr 16 - 16-bit destination address used by LCALL and LJMP. The destination may be anywhere within the 64K-byte program memory space.

There is one unused opcode (0xA5) that performs the same function as NOP.
All mnemonics copyrighted © Intel Corporation 1980.

10.2. MEMORY ORGANIZATION

The memory organization of the CIP-51 System Controller is similar to that of a standard 8051. There are two separate memory spaces: program memory and data memory. Program and data memory share the same address space but are accessed via different instruction types. There are 256 bytes of internal data memory and 64K bytes of internal program memory address space implemented within the CIP-51. The CIP-51 memory organization is shown in Figure 10.2.

10.2.1. Program Memory

The CIP-51 has a 64K-byte program memory space. The MCU implements 32896 bytes of this program memory space as in-system, reprogrammable Flash memory, organized in a contiguous block from addresses 0x0000 to 0x807F. Note: 512 bytes (0x7E00 – 0x7FFF) of this memory are reserved for factory use and are not available for user program storage.

Program memory is normally assumed to be read-only. However, the CIP-51 can write to program memory by setting the Program Store Write Enable bit (PSCTL.0) and using the MOVX instruction. This feature provides a mechanism for the CIP-51 to update program code and use the program memory space for non-volatile data storage. Refer to Section 11 (Flash Memory) for further details.

10.2.2. Data Memory

The CIP-51 implements 256 bytes of internal RAM mapped into the data memory space from 0x00 through 0xFF. The lower 128 bytes of data memory are used for general purpose registers and scratch pad memory. Either direct or indirect addressing may be used to access the lower 128 bytes of data memory. Locations 0x00 through 0x1F are addressable as four banks of general purpose registers, each bank consisting of eight byte-wide registers. The next 16 bytes, locations 0x20 through 0x2F, may be addressed as bytes or as 128 bit locations accessible with the direct-bit addressing mode.

The upper 128 bytes of data memory are accessible only by indirect addressing. This region occupies the same address space as the Special Function Registers (SFR) but is physically separate from the SFR space. The addressing mode used by an instruction when accessing locations above 0x7F determines whether the CPU accesses the upper 128 bytes of data memory space or the SFRs. Instructions that use direct addressing will access the SFR space. Instructions using indirect addressing above 0x7F will access the upper 128 bytes of data memory. Figure 10.2 illustrates the data memory organization of the CIP-51.

The C8051F005/06/07/15/16/17 also have 2048 bytes of RAM in the external data memory space of the CIP-51, accessible using the MOVX instruction. Refer to Section 12 (External RAM) for details.

10.2.3. General Purpose Registers

The lower 32 bytes of data memory, locations 0x00 through 0x1F, may be addressed as four banks of general-purpose registers. Each bank consists of eight byte-wide registers designated R0 through R7. Only one of these banks may be enabled at a time. Two bits in the program status word, RS0 (PSW.3) and RS1 (PSW.4), select the active register bank (see description of the PSW in Figure 10.6). This allows fast context switching when entering subroutines and interrupt service routines. Indirect addressing modes use registers R0 and R1 as index registers.

10.2.4. Bit Addressable Locations

In addition to direct access to data memory organized as bytes, the sixteen data memory locations at 0x20 through 0x2F are also accessible as 128 individually addressable bits. Each bit has a bit address from 0x00 to 0x7F. Bit 0 of the byte at 0x20 has bit address 0x00 while bit 7 of the byte at 0x20 has bit address 0x07. Bit 7 of the byte at 0x2F has bit address 0x7F. A bit access is distinguished from a full byte access by the type of instruction used (bit source or destination operands as opposed to a byte source or destination).

The MCS-51™ assembly language allows an alternate notation for bit addressing of the form `XX.B` where `XX` is the byte address and `B` is the bit position within the byte. For example, the instruction:

```
MOV   C, 22h.3
```

moves the Boolean value at 0x13 (bit 3 of the byte at location 0x22) into the user Carry flag.

Figure 10.2. Memory Map

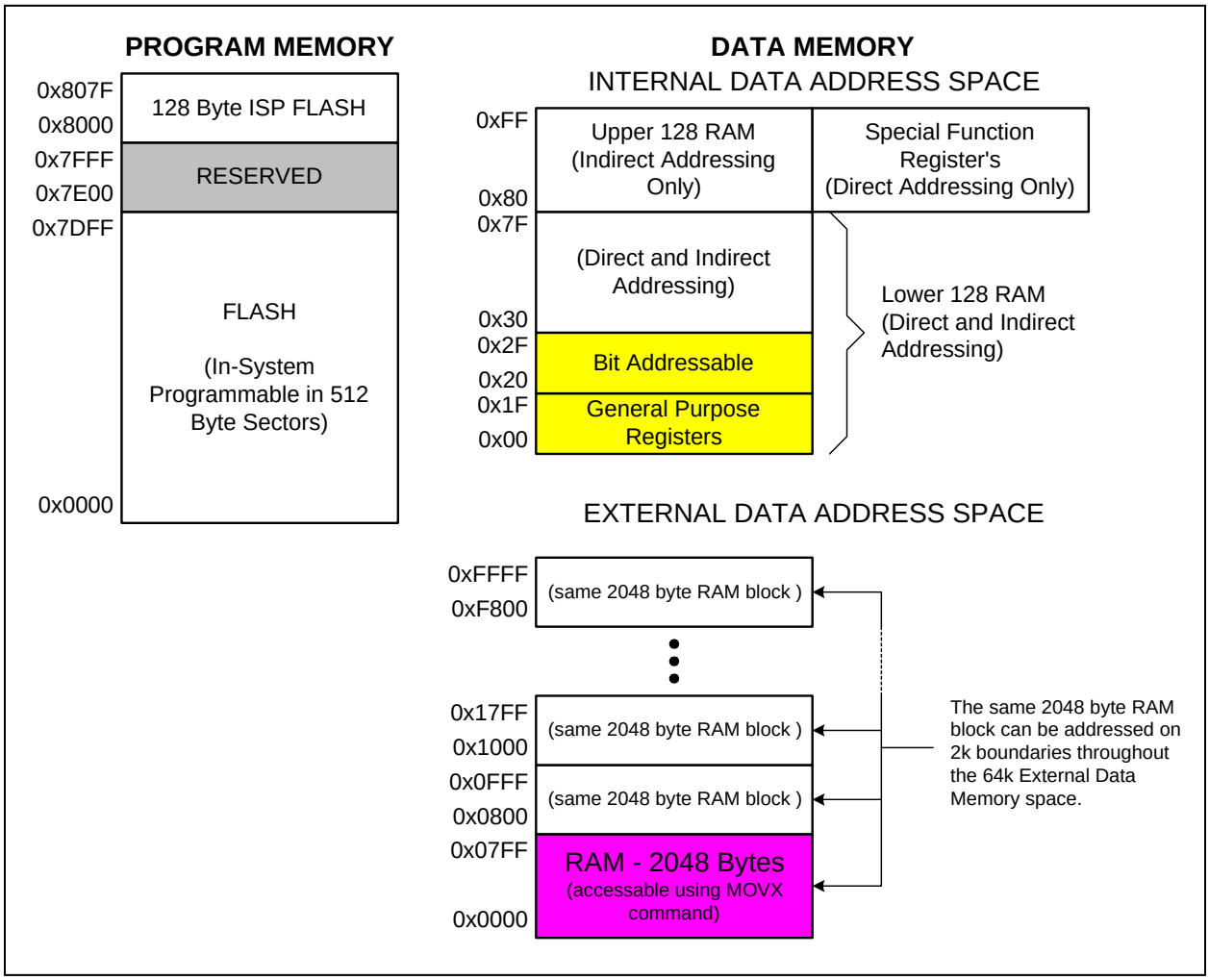

10.2.5. Stack

A programmer's stack can be located anywhere in the 256-byte data memory. The stack area is designated using the Stack Pointer (SP, 0x81) SFR. The SP will point to the last location used. The next value pushed on the stack is placed at SP+1 and then SP is incremented. A reset initializes the stack pointer to location 0x07. Therefore, the first value pushed on the stack is placed at location 0x08, which is also the first register (R0) of register bank 1. Thus, if more than one register bank is to be used, the SP should be initialized to a location in the data memory not being used for data storage. The stack depth can extend up to 256 bytes.

The MCUs also have built-in hardware for a stack record. The stack record is a 32-bit shift register, where each Push or increment SP pushes one record bit onto the register, and each Call or interrupt pushes two record bits onto the register. (A Pop or decrement SP pops one record bit, and a Return pops two record bits, also.) The stack record circuitry can also detect an overflow or underflow on the Stack, and can notify the debug software even with the MCU running full-speed debug.

10.3. SPECIAL FUNCTION REGISTERS

The direct-access data memory locations from 0x80 to 0xFF constitute the special function registers (SFRs). The SFRs provide control and data exchange with the CIP-51's resources and peripherals. The CIP-51 duplicates the SFRs found in a typical 8051 implementation as well as implementing additional SFRs used to configure and access the sub-systems unique to the MCU. This allows the addition of new functionality while retaining compatibility with the MCS-51™ instruction set. Table 10.3 lists the SFRs implemented in the CIP-51 System Controller.

The SFR registers are accessed any time the direct addressing mode is used to access memory locations from 0x80 to 0xFF. SFRs with addresses ending in 0x0 or 0x8 (e.g. P0, TCON, P1, SCON, IE, etc.) are bit-addressable as well as byte-addressable. All other SFRs are byte-addressable only. Unoccupied addresses in the SFR space are reserved for future use. Accessing these areas will have an indeterminate effect and should be avoided. Refer to the corresponding pages of the datasheet, as indicated in Table 10.3, for a detailed description of each register.

Table 10.2. Special Function Register Memory Map

F8	SPI0CN	PCA0H	PCA0CPH0	PCA0CPH1	PCA0CPH2	PCA0CPH3	PCA0CPH4	WDTCN
F0	B						EIP1	EIP2
E8	ADC0CN	PCA0L	PCA0CPL0	PCA0CPL1	PCA0CPL2	PCA0CPL3	PCA0CPL4	RSTSRC
E0	ACC	XBR0	XBR1	XBR2			EIE1	EIE2
D8	PCA0CN	PCA0MD	PCA0CPM0	PCA0CPM1	PCA0CPM2	PCA0CPM3	PCA0CPM4	
D0	PSW	REF0CN	DAC0L	DAC0H	DAC0CN	DAC1L	DAC1H	DAC1CN
C8	T2CON		RCAP2L	RCAP2H	TL2	TH2		SMB0CR
C0	SMB0CN	SMB0STA	SMB0DAT	SMB0ADR	ADC0GTL	ADC0GTH	ADC0LTL	ADC0LTH
B8	IP		AMX0CF	AMX0SL	ADC0CF		ADC0L	ADC0H
B0	P3	OSCXCN	OSCICN				FLSCL	FLACL***
A8	IE					PRT1IF		EMI0CN***
A0	P2				PRT0CF	PRT1CF	PRT2CF	PRT3CF
98	SCON	SBUF	SPI0CFG	SPI0DAT		SPI0CKR	CPT0CN	CPT1CN
90	P1	TMR3CN	TMR3RLL	TMR3RLH	TMR3L	TMR3H		
88	TCON	TMOD	TL0	TL1	TH0	TH1	CKCON	PSCTL
80	P0	SP	DPL	DPH				PCON
	0(8)	1(9)	2(A)	3(B)	4(C)	5(D)	6(E)	7(F)

Bit Addressable

Table 10.3. Special Function Registers

SFRs are listed in alphabetical order. All undefined SFR locations are reserved.
* Refers to a register in the C8051F000/1/2/5/6/7 only.
** Refers to a register in the C8051F010/1/2/5/6/7 only.
*** Refers to a register in the C8051F005/06/07/15/16/17 only.

Address	Register	Description	Page No.
0xE0	ACC	Accumulator	76
0xBC	ADC0CF	ADC Configuration	33*, 42**
0xE8	ADC0CN	ADC Control	34*, 45**
0xC5	ADC0GTH	ADC Greater-Than Data Word (High Byte)	36*, 47**
0xC4	ADC0GTL	ADC Greater-Than Data Word (Low Byte)	36*, 47**
0xBF	ADC0H	ADC Data Word (High Byte)	35*, 46**
0xBE	ADC0L	ADC Data Word (Low Byte)	35*, 46**

Address	Register	Description	Page No.
0xC7	ADC0LTH	ADC Less-Than Data Word (High Byte)	36*, 47**
0xC6	ADC0LTL	ADC Less-Than Data Word (Low Byte)	36*, 47**
0xBA	AMX0CF	ADC MUX Configuration	31*, 42**
0xBB	AMX0SL	ADC MUX Channel Selection	32*, 43**
0xF0	B	B Register	76
0x8E	CKCON	Clock Control	144
0x9E	CPT0CN	Comparator 0 Control	56
0x9F	CPT1CN	Comparator 1 Control	58
0xD4	DAC0CN	DAC 0 Control	52
0xD3	DAC0H	DAC 0 Data Word (High Byte)	52
0xD2	DAC0L	DAC 0 Data Word (Low Byte)	52
0xD7	DAC1CN	DAC 1 Control	53
0xD6	DAC1H	DAC 1 Data Word (High Byte)	53
0xD5	DAC1L	DAC 1 Data Word (Low Byte)	53
0x83	DPH	Data Pointer (High Byte)	74
0x82	DPL	Data Pointer (Low Byte)	74
0xE6	EIE1	Extended Interrupt Enable 1	81
0xE7	EIE2	Extended Interrupt Enable 2	82
0xF6	EIP1	External Interrupt Priority 1	83
0xF7	EIP2	External Interrupt Priority 2	84
0xAF	EMI0CN	External Memory Interface Control	92***
0xB7	FLACL	Flash Access Limit	90***
0xB6	FLSCL	Flash Memory Timing Prescaler	91
0xA8	IE	Interrupt Enable	79
0xB8	IP	Interrupt Priority Control	80
0xB2	OSCICN	Internal Oscillator Control	100
0xB1	OSCXCN	External Oscillator Control	101
0x80	P0	Port 0 Latch	109
0x90	P1	Port 1 Latch	110
0xA0	P2	Port 2 Latch	111
0xB0	P3	Port 3 Latch	112
0xD8	PCA0CN	Programmable Counter Array 0 Control	160
0xFA	PCA0CPH0	PCA Capture Module 0 Data Word (High Byte)	163
0xFB	PCA0CPH1	PCA Capture Module 1 Data Word (High Byte)	163
0xFC	PCA0CPH2	PCA Capture Module 2 Data Word (High Byte)	163
0xFD	PCA0CPH3	PCA Capture Module 3 Data Word (High Byte)	163
0xFE	PCA0CPH4	PCA Capture Module 4 Data Word (High Byte)	163
0xEA	PCA0CPL0	PCA Capture Module 0 Data Word (Low Byte)	163
0xEB	PCA0CPL1	PCA Capture Module 1 Data Word (Low Byte)	163
0xEC	PCA0CPL2	PCA Capture Module 2 Data Word (Low Byte)	163
0xED	PCA0CPL3	PCA Capture Module 3 Data Word (Low Byte)	163

Address	Register	Description	Page No.
0xEE	PCA0CPL4	PCA Capture Module 4 Data Word (Low Byte)	163
0xDA	PCA0CPM0	Programmable Counter Array 0 Capture/Compare 0	162
0xDB	PCA0CPM1	Programmable Counter Array 0 Capture/Compare 1	162
0xDC	PCA0CPM2	Programmable Counter Array 0 Capture/Compare 2	162
0xDD	PCA0CPM3	Programmable Counter Array 0 Capture/Compare 3	162
0xDE	PCA0CPM4	Programmable Counter Array 0 Capture/Compare 4	162
0xF9	PCA0H	PCA Counter/Timer Data Word (High Byte)	163
0xE9	PCA0L	PCA Counter/Timer Data Word (Low Byte)	163
0xD9	PCA0MD	Programmable Counter Array 0 Mode	161
0x87	PCON	Power Control	86
0xA4	PRT0CF	Port 0 Configuration	109
0xA5	PRT1CF	Port 1 Configuration	110
0xAD	PRT1IF	Port 1 Interrupt Flags	110
0xA6	PRT2CF	Port 2 Configuration	111
0xA7	PRT3CF	Port 3 Configuration	112
0x8F	PSCTL	Program Store RW Control	88
0xD0	PSW	Program Status Word	75
0xCB	RCAP2H	Counter/Timer 2 Capture (High Byte)	151
0xCA	RCAP2L	Counter/Timer 2 Capture (Low Byte)	151
0xD1	REF0CN	Voltage Reference Control Register	61
0xEF	RSTSRC	Reset Source Register	97
0x99	SBUF	Serial Data Buffer (UART)	136
0x98	SCON	Serial Port Control (UART)	137
0xC3	SMB0ADR	SMBus 0 Address	120
0xC0	SMB0CN	SMBus 0 Control	118
0xCF	SMB0CR	SMBus 0 Clock Rate	119
0xC2	SMB0DAT	SMBus 0 Data	120
0xC1	SMB0STA	SMBus 0 Status	121
0x81	SP	Stack Pointer	74
0x9A	SPI0CFG	Serial Peripheral Interface Configuration	127
0x9D	SPI0CKR	SPI Clock Rate	129
0xF8	SPI0CN	SPI Bus Control	128
0x9B	SPI0DAT	SPI Port 1Data	129
0xC8	T2CON	Counter/Timer 2 Control	150
0x88	TCON	Counter/Timer Control	142
0x8C	TH0	Counter/Timer 0 Data Word (High Byte)	145
0x8D	TH1	Counter/Timer 1 Data Word (High Byte)	145
0xCD	TH2	Counter/Timer 2 Data Word (High Byte)	151
0x8A	TL0	Counter/Timer 0 Data Word (Low Byte)	145
0x8B	TL1	Counter/Timer 1 Data Word (Low Byte)	145
0xCC	TL2	Counter/Timer 2 Data Word (Low Byte)	151

Address	Register	Description	Page No.
0x89	TMOD	Counter/Timer Mode	143
0x91	TMR3CN	Timer 3 Control	152
0x95	TMR3H	Timer 3 High	153
0x94	TMR3L	Timer 3 Low	153
0x93	TMR3RLH	Timer 3 Reload High	153
0x92	TMR3RLL	Timer 3 Reload Low	153
0xFF	WDTCN	Watchdog Timer Control	96
0xE1	XBR0	Port I/O Crossbar Configuration 1	105
0xE2	XBR1	Port I/O Crossbar Configuration 2	107
0xE3	XBR2	Port I/O Crossbar Configuration 3	108
0x84-86, 0x96-97, 0x9C, 0xA1-A3, 0xA9-AC, 0xAE, 0xB3-B5, 0xB9, 0xBD, 0xC9, 0xCE, 0xDF, 0xE4-E5, 0xF1-F5		Reserved	

* Refers to a register in the C8051F000/1/2/5/6/7 only.
** Refers to a register in the C8051F010/1/2/5/6/7 only.
*** Refers to a register in the C8051F005/06/07/15/16/17 only.

10.3.1. Register Descriptions

Following are descriptions of SFRs related to the operation of the CIP-51 System Controller. Reserved bits should not be set to logic l. Future product versions may use these bits to implement new features in which case the reset value of the bit will be logic 0, selecting the feature's default state. Detailed descriptions of the remaining SFRs are included in the sections of the datasheet associated with their corresponding system function.

Figure 10.3. SP: Stack Pointer

R/W	R/W	R/W	R/W	R/W	R/W	R/W	R/W	Reset Value
								00000111
Bit7	Bit6	Bit5	Bit4	Bit3	Bit2	Bit1	Bit0	SFR Address: 0x81

Bits 7-0: SP: Stack Pointer.
The stack pointer holds the location of the top of the stack. The stack pointer is incremented before every PUSH operation. The SP register defaults to 0x07 after reset.

Figure 10.4. DPL: Data Pointer Low Byte

R/W	R/W	R/W	R/W	R/W	R/W	R/W	R/W	Reset Value
								00000000
Bit7	Bit6	Bit5	Bit4	Bit3	Bit2	Bit1	Bit0	SFR Address: 0x82

Bits 7-0: DPL: Data Pointer Low.
The DPL register is the low byte of the 16-bit DPTR. DPTR is used to access indirectly addressed RAM and Flash Memory.

Figure 10.5. DPH: Data Pointer High Byte

R/W	R/W	R/W	R/W	R/W	R/W	R/W	R/W	Reset Value
								00000000
Bit7	Bit6	Bit5	Bit4	Bit3	Bit2	Bit1	Bit0	SFR Address: 0x83

Bits 7-0: DPH: Data Pointer High.
The DPH register is the high byte of the 16-bit DPTR. DPTR is used to access indirectly addressed RAM and Flash Memory.

Figure 10.6. PSW: Program Status Word

R/W	R/W	R/W	R/W	R/W	R/W	R/W	R/W	Reset Value
CY	AC	F0	RS1	RS0	OV	F1	PARITY	00000000
Bit7	Bit6	Bit5	Bit4	Bit3	Bit2	Bit1	Bit0 (bit addressable)	SFR Address: 0xD0

Bit7: CY: Carry Flag.
This bit is set when the last arithmetic operation results in a carry (addition) or a borrow (subtraction). It is cleared to 0 by all other arithmetic operations.

Bit6: AC: Auxiliary Carry Flag.
This bit is set when the last arithmetic operation results in a carry into (addition) or a borrow from (subtraction) the high order nibble. It is cleared to 0 by all other arithmetic operations.

Bit5: F0: User Flag 0.
This is a bit-addressable, general purpose flag for use under software control.

Bits4-3: RS1-RS0: Register Bank Select.
These bits select which register bank is used during register accesses.

RS1	RS0	Register Bank	Address
0	0	0	0x00-0x07
0	1	1	0x08-0x0F
1	0	2	0x10-0x17
1	1	3	0x18-0x1F

Note: Any instruction which changes the RS1-RS0 bits must not be immediately followed by the “MOV Rn, A” instruction.

Bit2: OV: Overflow Flag.
This bit is set to 1 under the following circumstances:

- An ADD, ADDC, or SUBB instruction causes a sign-change overflow.
- A MUL instruction results in an overflow (result is greater than 255) .
- A DIV instruction causes a divide-by-zero condition.

The OV bit is cleared to 0 by the ADD, ADDC, SUBB, MUL, and DIV instructions in all other cases.

Bit1: F1: User Flag 1.
This is a bit-addressable, general purpose flag for use under software control.

Bit0: PARITY: Parity Flag.
(Read only)
This bit is set to 1 if the sum of the eight bits in the accumulator is odd and cleared if the sum is even.

Figure 10.7. ACC: Accumulator

R/W	R/W	R/W	R/W	R/W	R/W	R/W	R/W	Reset Value
ACC.7	ACC.6	ACC.5	ACC.4	ACC.3	ACC.2	ACC.1	ACC.0	00000000
Bit7	Bit6	Bit5	Bit4	Bit3	Bit2	Bit1	Bit0 (bit addressable)	SFR Address: 0xE0

Bits 7-0: ACC: Accumulator
This register is the accumulator for arithmetic operations.

Figure 10.8. B: B Register

R/W	R/W	R/W	R/W	R/W	R/W	R/W	R/W	Reset Value
B.7	B.6	B.5	B.4	B.3	B.2	B.1	B.0	00000000
Bit7	Bit6	Bit5	Bit4	Bit3	Bit2	Bit1	Bit0 (bit addressable)	SFR Address: 0xF0

Bits 7-0: B: B Register
This register serves as a second accumulator for certain arithmetic operations.

10.4. INTERRUPT HANDLER

The CIP-51 includes an extended interrupt system supporting a total of 22 interrupt sources with two priority levels. The allocation of interrupt sources between on-chip peripherals and external inputs pins varies according to the specific version of the device. Each interrupt source has one or more associated interrupt-pending flag(s) located in an SFR. When a peripheral or external source meets a valid interrupt condition, the associated interrupt-pending flag is set to logic 1.

If interrupts are enabled for the source, an interrupt request is generated when the interrupt-pending flag is set. As soon as execution of the current instruction is complete, the CPU generates an LCALL to a predetermined address to begin execution of an interrupt service routine (ISR). Each ISR must end with an RETI instruction, which returns program execution to the next instruction that would have been executed if the interrupt request had not occurred. If interrupts are not enabled, the interrupt-pending flag is ignored by the hardware and program execution continues as normal. (The interrupt-pending flag is set to logic 1 regardless of the interrupt's enable/disable state.)

Each interrupt source can be individually enabled or disabled through the use of an associated interrupt enable bit in an SFR (IE-EIE2). However, interrupts must first be globally enabled by setting the EA bit (IE.7) to logic 1 before the individual interrupt enables are recognized. Setting the EA bit to logic 0 disables all interrupt sources regardless of the individual interrupt-enable settings.

Some interrupt-pending flags are automatically cleared by the hardware when the CPU vectors to the ISR. However, most are not cleared by the hardware and must be cleared by software before returning from the ISR. If an interrupt-pending flag remains set after the CPU completes the return-from-interrupt (RETI) instruction, a new interrupt request will be generated immediately and the CPU will re-enter the ISR after the completion of the next instruction.

10.4.1. MCU Interrupt Sources and Vectors

The MCUs allocate 12 interrupt sources to on-chip peripherals. Up to 10 additional external interrupt sources are available depending on the I/O pin configuration of the device. Software can simulate an interrupt by setting any interrupt-pending flag to logic 1. If interrupts are enabled for the flag, an interrupt request will be generated and the CPU will vector to the ISR address associated with the interrupt-pending flag. MCU interrupt sources, associated vector addresses, priority order and control bits are summarized in Table 10.4. Refer to the datasheet section associated with a particular on-chip peripheral for information regarding valid interrupt conditions for the peripheral and the behavior of its interrupt-pending flag(s).

10.4.2. External Interrupts

Two of the external interrupt sources (/INT0 and /INT1) are configurable as active-low level-sensitive or active-low edge-sensitive inputs depending on the setting of IT0 (TCON.0) and IT1 (TCON.2). IE0 (TCON.1) and IE1 (TCON.3) serve as the interrupt-pending flag for the /INT0 and /INT1 external interrupts, respectively. If an /INT0 or /INT1 external interrupt is configured as edge-sensitive, the corresponding interrupt-pending flag is automatically cleared by the hardware when the CPU vectors to the ISR. When configured as level sensitive, the interrupt-pending flag follows the state of the external interrupt's input pin. The external interrupt source must hold the input active until the interrupt request is recognized. It must then deactivate the interrupt request before execution of the ISR completes or another interrupt request will be generated.

The remaining four external interrupts (External Interrupts 4-7) are active-low, edge-sensitive inputs. The interrupt-pending flags for these interrupts are in the Port 1 Interrupt Flag Register shown in Figure 15.10.

Table 10.4. Interrupt Summary

Interrupt Source	Interrupt Vector	Priority Order	Interrupt-Pending Flag	Enable
Reset	0x0000	Top	None	Always enabled
External Interrupt 0 (/INT0)	0x0003	0	IE0 (TCON.1)	EX0 (IE.0)
Timer 0 Overflow	0x000B	1	TF0 (TCON.5)	ET0 (IE.1)
External Interrupt 1 (/INT1)	0x0013	2	IE1 (TCON.3)	EX1 (IE.2)
Timer 1 Overflow	0x001B	3	TF1 (TCON.7)	ET1 (IE.3)
Serial Port (UART)	0x0023	4	RI (SCON.0) TI (SCON.1)	ES (IE.4)
Timer 2 Overflow (or EXF2)	0x002B	5	TF2 (T2CON.7)	ET2 (IE.5)
Serial Peripheral Interface	0x0033	6	SPIF (SPI0CN.7) WCOL (SPI0CN.6) MODF (SPI0CN.5) RXOVRN (SPI0CN.4)	ESPI0 (EIE1.0)
SMBus Interface	0x003B	7	SI (SMB0CN.3)	ESMB0 (EIE1.1)
ADC0 Window Comparison	0x0043	8	ADWINT (ADC0CN.2)	EWADC0 (EIE1.2)
Programmable Counter Array 0	0x004B	9	CF (PCA0CN.7) CCFn (PCA0CN.n)	EPCA0 (EIE1.3)
Comparator 0 Falling Edge	0x0053	10	CP0FIF (CPT0CN.4)	ECP0F (EIE1.4)
Comparator 0 Rising Edge	0x005B	11	CP0RIF (CPT0CN.5)	ECP0R (EIE1.5)
Comparator 1 Falling Edge	0x0063	12	CP1FIF (CPT1CN.4)	ECP1F (EIE1.6)
Comparator 1 Rising Edge	0x006B	13	CP1RIF (CPT1CN.5)	ECP1R (EIE1.7)
Timer 3 Overflow	0x0073	14	TF3 (TMR3CN.7)	ET3 (EIE2.0)
ADC0 End of Conversion	0x007B	15	ADCINT (ADC0CN.5)	EADC0 (EIE2.1)
External Interrupt 4	0x0083	16	IE4 (PRT1IF.4)	EX4 (EIE2.2)
External Interrupt 5	0x008B	17	IE5 (PRT1IF.5)	EX5 (EIE2.3)
External Interrupt 6	0x0093	18	IE6 (PRT1IF.6)	EX6 (EIE2.4)
External Interrupt 7	0x009B	19	IE7 (PRT1IF.7)	EX7 (EIE2.5)
Unused Interrupt Location	0x00A3	20	None	Reserved (EIE2.6)
External Crystal OSC Ready	0x00AB	21	XTLVLD (OSCXCN.7)	EXVLD (EIE2.7)

10.4.3. Interrupt Priorities

Each interrupt source can be individually programmed to one of two priority levels: low or high. A low priority interrupt service routine can be preempted by a high priority interrupt. A high priority interrupt cannot be preempted. Each interrupt has an associated interrupt priority bit in an SFR (IP-EIP2) used to configure its priority level. Low priority is the default. If two interrupts are recognized simultaneously, the interrupt with the higher priority is serviced first. If both interrupts have the same priority level, a fixed priority order is used to arbitrate.

10.4.4. Interrupt Latency

Interrupt response time depends on the state of the CPU when the interrupt occurs. Pending interrupts are sampled and priority decoded each system clock cycle. Therefore, the fastest possible response time is 5 system clock cycles: 1 clock cycle to detect the interrupt and 4 clock cycles to complete the LCALL to the ISR. If an interrupt is pending when a RETI is executed, a single instruction is executed before an LCALL is made to service the pending interrupt. Therefore, the maximum response time for an interrupt (when no other interrupt is currently being serviced or the new interrupt is of greater priority) occurs when the CPU is performing an RETI instruction followed by a DIV as the next instruction. In this case, the response time is 18 system clock cycles: 1 clock cycle to detect the interrupt, 5 clock cycles to execute the RETI, 8 clock cycles to complete the DIV instruction and 4 clock cycles to execute the LCALL to the ISR. If the CPU is executing an ISR for an interrupt with equal or higher priority, the new interrupt will not be serviced until the current ISR completes, including the RETI and following instruction.

10.4.5. Interrupt Register Descriptions

The SFRs used to enable the interrupt sources and set their priority level are described below. Refer to the datasheet section associated with a particular on-chip peripheral for information regarding valid interrupt conditions for the peripheral and the behavior of its interrupt-pending flag(s).

Figure 10.9. IE: Interrupt Enable

R/W	R/W	R/W	R/W	R/W	R/W	R/W	R/W	Reset Value
EA	IEGF0	ET2	ES	ET1	EX1	ET0	EX0	00000000
Bit7	Bit6	Bit5	Bit4	Bit3	Bit2	Bit1	Bit0 (bit addressable)	SFR Address: 0xA8

Bit7: EA: Enable All Interrupts.
This bit globally enables/disables all interrupts. It overrides the individual interrupt mask settings.
0: Disable all interrupt sources.
1: Enable each interrupt according to its individual mask setting.

Bit6: IEGF0: General Purpose Flag 0.
This is a general purpose flag for use under software control.

Bit5: ET2: Enable Timer 2 Interrupt.
This bit sets the masking of the Timer 2 interrupt.
0: Disable all Timer 2 interrupts.
1: Enable interrupt requests generated by the TF2 flag (T2CON.7)

Bit4: ES: Enable Serial Port (UART) Interrupt.
This bit sets the masking of the Serial Port (UART) interrupt.
0: Disable all UART interrupts.
1: Enable interrupt requests generated by the R1 flag (SCON.0) or T1 flag (SCON.1).

Bit3: ET1: Enable Timer 1 Interrupt.
This bit sets the masking of the Timer 1 interrupt.
0: Disable all Timer 1 interrupts.
1: Enable interrupt requests generated by the TF1 flag (TCON.7).

Bit2: EX1: Enable External Interrupt 1.
This bit sets the masking of external interrupt 1.
0: Disable external interrupt 1.
1: Enable interrupt requests generated by the /INT1 pin.

Bit1: ET0: Enable Timer 0 Interrupt.
This bit sets the masking of the Timer 0 interrupt.
0: Disable all Timer 0 interrupts.
1: Enable interrupt requests generated by the TF0 flag (TCON.5).

Bit0: EX0: Enable External Interrupt 0.
This bit sets the masking of external interrupt 0.
0: Disable external interrupt 0.
1: Enable interrupt requests generated by the /INT0 pin.

Figure 10.10. IP: Interrupt Priority

R/W	R/W	R/W	R/W	R/W	R/W	R/W	R/W	Reset Value
-	-	PT2	PS	PT1	PX1	PT0	PX0	00000000
Bit7	Bit6	Bit5	Bit4	Bit3	Bit2	Bit1	Bit0 (bit addressable)	SFR Address: 0xB8

Bits7-6: UNUSED. Read = 11b, Write = don't care.

Bit5: PT2 Timer 2 Interrupt Priority Control.
This bit sets the priority of the Timer 2 interrupts.
0: Timer 2 interrupts set to low priority level.
1: Timer 2 interrupts set to high priority level.

Bit4: PS: Serial Port (UART) Interrupt Priority Control.
This bit sets the priority of the Serial Port (UART) interrupts.
0: UART interrupts set to low priority level.
1: UART interrupts set to high priority level.

Bit3: PT1: Timer 1 Interrupt Priority Control.
This bit sets the priority of the Timer 1 interrupts.
0: Timer 1 interrupts set to low priority level.
1: Timer 1 interrupts set to high priority level.

Bit2: PX1: External Interrupt 1 Priority Control.
This bit sets the priority of the External Interrupt 1 interrupts.
0: External Interrupt 1 set to low priority level.
1: External Interrupt 1 set to high priority level.

Bit1: PT0: Timer 0 Interrupt Priority Control.
This bit sets the priority of the Timer 0 interrupts.
0: Timer 0 interrupt set to low priority level.
1: Timer 0 interrupt set to high priority level.

Bit0: PX0: External Interrupt 0 Priority Control.
This bit sets the priority of the External Interrupt 0 interrupts.
0: External Interrupt 0 set to low priority level.
1: External Interrupt 0 set to high priority level.

Figure 10.11. EIE1: Extended Interrupt Enable 1

R/W	R/W	R/W	R/W	R/W	R/W	R/W	R/W	Reset Value
ECP1R	ECP1F	ECP0R	ECP0F	EPCA0	EWADC0	ESMB0	ESPI0	00000000
Bit7	Bit6	Bit5	Bit4	Bit3	Bit2	Bit1	Bit0	SFR Address: 0xE6

Bit7: ECP1R: Enable Comparator 1 (CP1) Rising Edge Interrupt.
This bit sets the masking of the CP1 interrupt.
0: Disable CP1 Rising Edge interrupt.
1: Enable interrupt requests generated by the CP1RIF flag (CPT1CN.5).

Bit6: ECP1F: Enable Comparator 1 (CP1) Falling Edge Interrupt.
This bit sets the masking of the CP1 interrupt.
0: Disable CP1 Falling Edge interrupt.
1: Enable interrupt requests generated by the CP1FIF flag (CPT1CN.4).

Bit5: ECP0R: Enable Comparator 0 (CP0) Rising Edge Interrupt.
This bit sets the masking of the CP0 interrupt.
0: Disable CP0 Rising Edge interrupt.
1: Enable interrupt requests generated by the CP0RIF flag (CPT0CN.5).

Bit4: ECP0F: Enable Comparator 0 (CP0) Falling Edge Interrupt.
This bit sets the masking of the CP0 interrupt.
0: Disable CP0 Falling Edge interrupt.
1: Enable interrupt requests generated by the CP0FIF flag (CPT0CN.4).

Bit3: EPCA0: Enable Programmable Counter Array (PCA0) Interrupt.
This bit sets the masking of the PCA0 interrupts.
0: Disable all PCA0 interrupts.
1: Enable interrupt requests generated by PCA0.

Bit2: EWADC0: Enable Window Comparison ADC0 Interrupt.
This bit sets the masking of ADC0 Window Comparison interrupt.
0: Disable ADC0 Window Comparison Interrupt.
1: Enable Interrupt requests generated by ADC0 Window Comparisons.

Bit1: ESMB0: Enable SMBus 0 Interrupt.
This bit sets the masking of the SMBus interrupt.
0: Disable all SMBus interrupts.
1: Enable interrupt requests generated by the SI flag (SMB0CN.3).

Bit0: ESPI0: Enable Serial Peripheral Interface 0 Interrupt.
This bit sets the masking of SPI0 interrupt.
0: Disable all SPI0 interrupts.
1: Enable Interrupt requests generated by SPI0.

Figure 10.12. EIE2: Extended Interrupt Enable 2

R/W	R/W	R/W	R/W	R/W	R/W	R/W	R/W	Reset Value
EXVLD	-	EX7	EX6	EX5	EX4	EADC0	ET3	00000000
Bit7	Bit6	Bit5	Bit4	Bit3	Bit2	Bit1	Bit0	SFR Address: 0xE7

Bit7: EXVLD: Enable External Clock Source Valid (XTLVLD) Interrupt.
This bit sets the masking of the XTLVLD interrupt.
0: Disable all XTLVLD interrupts.
1: Enable interrupt requests generated by the XTLVLD flag (OSCXCN.7)

Bit6: Reserved. Must Write 0. Reads 0.

Bit5: EX7: Enable External Interrupt 7.
This bit sets the masking of External Interrupt 7.
0: Disable External Interrupt 7.
1: Enable interrupt requests generated by the External Interrupt 7 input pin.

Bit4: EX6: Enable External Interrupt 6.
This bit sets the masking of External Interrupt 6.
0: Disable External Interrupt 6.
1: Enable interrupt requests generated by the External Interrupt 6 input pin.

Bit3: EX5: Enable External Interrupt 5.
This bit sets the masking of External Interrupt 5.
0: Disable External Interrupt 5.
1: Enable interrupt requests generated by the External Interrupt 5 input pin.

Bit2: EX4: Enable External Interrupt 4.
This bit sets the masking of External Interrupt 4.
0: Disable External Interrupt 4.
1: Enable interrupt requests generated by the External Interrupt 4 input pin.

Bit1: EADC0: Enable ADC0 End of Conversion Interrupt.
This bit sets the masking of the ADC0 End of Conversion Interrupt.
0: Disable ADC0 Conversion Interrupt.
1: Enable interrupt requests generated by the ADC0 Conversion Interrupt.

Bit0: ET3: Enable Timer 3 Interrupt.
This bit sets the masking of the Timer 3 interrupt.
0: Disable all Timer 3 interrupts.
1: Enable interrupt requests generated by the TF3 flag (TMR3CN.7)

Figure 10.13. EIP1: Extended Interrupt Priority 1

R/W	R/W	R/W	R/W	R/W	R/W	R/W	R/W	Reset Value
PCP1R	PCP1F	PCP0R	PCP0F	PPCA0	PWADC0	PSMB0	PSPI0	00000000
Bit7	Bit6	Bit5	Bit4	Bit3	Bit2	Bit1	Bit0	SFR Address: 0xF6

Bit7: PCP1R: Comparator 1 (CP1) Rising Interrupt Priority Control.
This bit sets the priority of the CP1 interrupt.
0: CP1 rising interrupt set to low priority level.
1: CP1 rising interrupt set to high priority level.

Bit6: PCP1F: Comparator 1 (CP1) Falling Interrupt Priority Control.
This bit sets the priority of the CP1 interrupt.
0: CP1 falling interrupt set to low priority level.
1: CP1 falling interrupt set to high priority level.

Bit5: PCP0R: Comparator 0 (CP0) Rising Interrupt Priority Control.
This bit sets the priority of the CP0 interrupt.
0: CP0 rising interrupt set to low priority level.
1: CP0 rising interrupt set to high priority level.

Bit4: PCP0F: Comparator 0 (CP0) Falling Interrupt Priority Control.
This bit sets the priority of the CP0 interrupt.
0: CP0 falling interrupt set to low priority level.
1: CP0 falling interrupt set to high priority level.

Bit3: PPCA0: Programmable Counter Array (PCA0) Interrupt Priority Control.
This bit sets the priority of the PCA0 interrupt.
0: PCA0 interrupt set to low priority level.
1: PCA0 interrupt set to high priority level.

Bit2: PWADC0: ADC0 Window Comparator Interrupt Priority Control.
This bit sets the priority of the ADC0 Window interrupt.
0: ADC0 Window interrupt set to low priority level.
1: ADC0 Window interrupt set to high priority level.

Bit1: PSMB0: SMBus 0 Interrupt Priority Control.
This bit sets the priority of the SMBus interrupt.
0: SMBus interrupt set to low priority level.
1: SMBus interrupt set to high priority level.

Bit0: PSPI0: Serial Peripheral Interface 0 Interrupt Priority Control.
This bit sets the priority of the SPI0 interrupt.
0: SPI0 interrupt set to low priority level.
1: SPI0 interrupt set to high priority level.

Figure 10.14. EIP2: Extended Interrupt Priority 2

R/W	R/W	R/W	R/W	R/W	R/W	R/W	R/W	Reset Value
PXVLD	-	PX7	PX6	PX5	PX4	PADC0	PT3	00000000
Bit7	Bit6	Bit5	Bit4	Bit3	Bit2	Bit1	Bit0	SFR Address: 0xF7

Bit7: PXVLD: External Clock Source Valid (XTLVLD) Interrupt Priority Control.
This bit sets the priority of the XTLVLD interrupt.
0: XTLVLD interrupt set to low priority level.
1: XTLVLD interrupt set to high priority level.

Bit6: Reserved: Must write 0. Reads 0.

Bit5: PX7: External Interrupt 7 Priority Control.
This bit sets the priority of the External Interrupt 7.
0: External Interrupt 7 set to low priority level.
1: External Interrupt 7 set to high priority level.

Bit4: PX6: External Interrupt 6 Priority Control.
This bit sets the priority of the External Interrupt 6.
0: External Interrupt 6 set to low priority level.
1: External Interrupt 6 set to high priority level.

Bit3: PX5: External Interrupt 5 Priority Control.
This bit sets the priority of the External Interrupt 5.
0: External Interrupt 5 set to low priority level.
1: External Interrupt 5 set to high priority level.

Bit2: PX4: External Interrupt 4 Priority Control.
This bit sets the priority of the External Interrupt 4.
0: External Interrupt 4 set to low priority level.
1: External Interrupt 4 set to high priority level.

Bit1: PADC0: ADC End of Conversion Interrupt Priority Control.
This bit sets the priority of the ADC0 End of Conversion Interrupt.
0: ADC0 End of Conversion interrupt set to low priority level.
1: ADC0 End of Conversion interrupt set to high priority level.

Bit0: PT3: Timer 3 Interrupt Priority Control.
This bit sets the priority of the Timer 3 interrupts.
0: Timer 3 interrupt set to low priority level.
1: Timer 3 interrupt set to high priority level.

10.5. Power Management Modes

The CIP-51 core has two software programmable power management modes: Idle and Stop. Idle mode halts the CPU while leaving the external peripherals and internal clocks active. In Stop mode, the CPU is halted, all interrupts and timers (except the Missing Clock Detector) are inactive, and the system clock is stopped. Since clocks are running in Idle mode, power consumption is dependent upon the system clock frequency and the number of peripherals left in active mode before entering Idle. Stop mode consumes the least power. Figure 10.15 describes the Power Control Register (PCON) used to control the CIP-51's power management modes.

Although the CIP-51 has Idle and Stop modes built in (as with any standard 8051 architecture), power management of the entire MCU is better accomplished by enabling/disabling individual peripherals as needed. Each analog peripheral can be disabled when not in use and put into low power mode. Digital peripherals, such as timers or serial buses, draw little power whenever they are not in use. Turning off the oscillator saves even more power, but requires a reset to restart the MCU.

10.5.1. Idle Mode

Setting the Idle Mode Select bit (PCON.0) causes the CIP-51 to halt the CPU and enter Idle mode as soon as the instruction that sets the bit completes. All internal registers and memory maintain their original data. All analog and digital peripherals can remain active during Idle mode.

Idle mode is terminated when an enabled interrupt or /RST is asserted. The assertion of an enabled interrupt will cause the Idle Mode Selection bit (PCON.0) to be cleared and the CPU will resume operation. The pending interrupt will be serviced and the next instruction to be executed after the return from interrupt (RETI) will be the instruction immediately following the one that set the Idle Mode Select bit. If Idle mode is terminated by an internal or external reset, the CIP-51 performs a normal reset sequence and begins program execution at address 0x0000.

Note: If the instruction following the write of the IDLE bit is a single-byte instruction and an interrupt occurs during the execution phase of the instruction that sets the IDLE bit, the CPU may not wake from Idle mode when a future interrupt occurs. Any instructions that set the IDLE bit should be followed by an instruction that has 2 or more op-code bytes, for example:

```
// in 'C':
PCON |= 0x01;          // set IDLE bit
PCON  = PCON;          // ... followed by a 3-cycle dummy instruction

; in assembly:
ORL   PCON,  #01h      ; set IDLE bit
MOV  PCON,  PCON       ; ... followed by a 3-cycle dummy instruction
```

If enabled, the WDT will eventually cause an internal watchdog reset and thereby terminate the Idle mode. This feature protects the system from an unintended permanent shutdown in the event of an inadvertent write to the PCON register. If this behavior is not desired, the WDT may be disabled by software prior to entering the Idle mode if the WDT was initially configured to allow this operation. This provides the opportunity for additional power savings, allowing the system to remain in the Idle mode indefinitely, waiting for an external stimulus to wake up the system. Refer to Section 13.8 Watchdog Timer for more information on the use and configuration of the WDT.

10.5.2. Stop Mode

Setting the Stop Mode Select bit (PCON.1) causes the CIP-51 to enter Stop mode as soon as the instruction that sets the bit completes. In Stop mode, the CPU and oscillators are stopped, effectively shutting down all digital peripherals. Each analog peripheral must be shut down individually prior to entering Stop Mode. Stop mode can only be terminated by an internal or external reset. On reset, the CIP-51 performs the normal reset sequence and begins program execution at address 0x0000.

If enabled, the Missing Clock Detector will cause an internal reset and thereby terminate the Stop mode. The Missing Clock Detector should be disabled if the CPU is to be put to sleep for longer than the MCD timeout of 100µsec.

Figure 10.15. PCON: Power Control Register

R/W	R/W	R/W	R/W	R/W	R/W	R/W	R/W	Reset Value
SMOD	GF4	GF3	GF2	GF1	GF0	STOP	IDLE	00000000
Bit7	Bit6	Bit5	Bit4	Bit3	Bit2	Bit1	Bit0	SFR Address: 0x87

Bit7: SMOD: Serial Port Baud Rate Doubler Enable.
0: Serial Port baud rate is that defined by Serial Port Mode in SCON.
1: Serial Port baud rate is double that defined by Serial Port Mode in SCON.

Bits6-2: GF4-GF0: General Purpose Flags 4-0.
These are general purpose flags for use under software control.

Bit1: STOP: Stop Mode Select.
Setting this bit will place the CIP-51 in Stop mode. This bit will always be read as 0.
1: Goes into power down mode. (Turns off internal oscillator).

Bit0: IDLE: Idle Mode Select.
Setting this bit will place the CIP-51 in Idle mode. This bit will always be read as 0.
1: Goes into idle mode. (Shuts off clock to CPU, but clock to Timers, Interrupts, Serial Ports, and Analog Peripherals are still active.)

11. FLASH MEMORY

These devices include 32k + 128 bytes of on-chip, reprogrammable Flash memory for program code and non-volatile data storage. The Flash memory can be programmed in-system, a single byte at a time, through the JTAG interface or by software using the MOVX instruction. Once cleared to 0, a Flash bit must be erased to set it back to 1. The bytes would typically be erased (set to 0xFF) before being reprogrammed. The write and erase operations are automatically timed by hardware for proper execution. Data polling to determine the end of the write/erase operation is not required. The Flash memory is designed to withstand at least 20,000 write/erase cycles. Refer to Table 11.1 for the electrical characteristics of the Flash memory.

11.1. Programming The Flash Memory

The simplest means of programming the Flash memory is through the JTAG interface using programming tools provided by Silicon Labs or a third party vendor. This is the only means for programming a non-initialized device. For details on the JTAG commands to program Flash memory, see Section 21.2.

The Flash memory can be programmed by software using the MOVX instruction with the address and data byte to be programmed provided as normal operands. Before writing to Flash memory using MOVX, Flash write operations must be enabled by setting the PSWE Program Store Write Enable bit (PSCTL.0) to logic 1. Writing to Flash remains enabled until the PSWE bit is cleared by software.

Writes to Flash memory can clear bits but cannot set them. Only an erase operation can set bits in Flash. Therefore, the byte location to be programmed must be erased before a new value can be written. The 32kbyte Flash memory is organized in 512-byte sectors. The erase operation applies to an entire sector (setting all bytes in the sector to 0xFF). Setting the PSEE Program Store Erase Enable bit (PSCTL.1) and PSWE (PSCTL.0) bit to logic 1 and then using the MOVX command to write a data byte to any byte location within the sector will erase an entire 512-byte sector. The data byte written can be of any value because it is not actually written to the Flash. Flash erasure remains enabled until the PSEE bit is cleared by software. The following sequence illustrates the algorithm for programming the Flash memory by software:

1. Enable Flash Memory write/erase in FLSCL Register using FLASCL bits.
2. Set PSEE (PSCTL.1) to enable Flash sector erase.
3. Set PSWE (PSCTL.0) to enable Flash writes.
4. Use MOVX to write a data byte to any location within the 512-byte sector to be erased.
5. Clear PSEE to disable Flash sector erase.
6. Use MOVX to write a data byte to the desired byte location within the erased 512-byte sector. Repeat until finished. (Any number of bytes can be written from a single byte to and entire sector.)
7. Clear the PSWE bit to disable Flash writes.

Write/Erase timing is automatically controlled by hardware based on the prescaler value held in the Flash Memory Timing Prescaler register (FLSCL). The 4-bit prescaler value FLASCL determines the time interval for write/erase operations. The FLASCL value required for a given system clock is shown in Figure 11.4, along with the formula used to derive the FLASCL values. When FLASCL is set to 1111b, the write/erase operations are disabled. Note that code execution in the 8051 is stalled while the Flash is being programmed or erased.

Table 11.1. FLASH Memory Electrical Characteristics

VDD = 2.7 to 3.6V, -40°C to +85°C unless otherwise specified.

PARAMETER	CONDITIONS	MIN	TYP	MAX	UNITS
Endurance		20k	100k		Erase/Wr
Erase Cycle Time		10			ms
Write Cycle Time		40			µs

11.2. Non-volatile Data Storage

The Flash memory can be used for non-volatile data storage as well as program code. This allows data such as calibration coefficients to be calculated and stored at run time. Data is written using the MOVX instruction and read using the MOVC instruction.

The MCU incorporates an additional 128-byte sector of Flash memory located at 0x8000 – 0x807F. This sector can be used for program code or data storage. However, its smaller sector size makes it particularly well suited as general purpose, non-volatile scratchpad memory. Even though Flash memory can be written a single byte at a time, an entire sector must be erased first. In order to change a single byte of a multi-byte data set, the data must be moved to temporary storage. Next, the sector is erased, the data set updated and the data set returned to the original sector. The 128-byte sector-size facilitates updating data without wasting program memory space by allowing the use of internal data RAM for temporary storage. (A normal 512-byte sector is too large to be stored in the 256-byte internal data memory.)

11.3. Security Options

The CIP-51 provides security options to protect the Flash memory from inadvertent modification by software as well as prevent the viewing of proprietary program code and constants. The Program Store Write Enable (PSCTL.0) and the Program Store Erase Enable (PSCTL.1) bits protect the Flash memory from accidental modification by software. These bits must be explicitly set to logic 1 before software can modify the Flash memory. Additional security features prevent proprietary program code and data constants from being read or altered across the JTAG interface or by software running on the system controller.

A set of security lock bytes stored at 0x7DFE and 0x7DFF protect the Flash program memory from being read or altered across the JTAG interface. Each bit in a security lock-byte protects one 4kbyte block of memory. Clearing a bit to logic 0 in a Read lock byte prevents the corresponding block of Flash memory from being read across the JTAG interface. Clearing a bit in the Write/Erase lock byte protects the block from JTAG erasures and/or writes. The Read lock byte is at location 0x7DFF. The Write/Erase lock byte is located at 0x7DFE. Figure 11.2 shows the location and bit definitions of the security bytes. The 512-byte sector containing the lock bytes can be written to, but not erased by software. Writing to the reserved area should not be performed.

Figure 11.1. PSCTL: Program Store RW Control

R/W	R/W	R/W	R/W	R/W	R/W	R/W	R/W	Reset Value
-	-	-	-	-	-	PSEE	PSWE	00000000
Bit7	Bit6	Bit5	Bit4	Bit3	Bit2	Bit1	Bit0	SFR Address: 0x8F

Bits7-2: UNUSED. Read = 000000b, Write = don't care.

Bit1: PSEE: Program Store Erase Enable.
Setting this bit allows an entire page of the Flash program memory to be erased provided the PSWE bit is also set. After setting this bit, a write to Flash memory using the MOVX instruction will erase the entire page that contains the location addressed by the MOVX instruction. The value of the data byte written does not matter.
0: Flash program memory erasure disabled.
1: Flash program memory erasure enabled.

Bit0: PSWE: Program Store Write Enable.
Setting this bit allows writing a byte of data to the Flash program memory using the MOVX instruction. The location must be erased before writing data.
0: Write to Flash program memory disabled.
1: Write to Flash program memory enabled.

Figure 11.2. Flash Program Memory Security Bytes

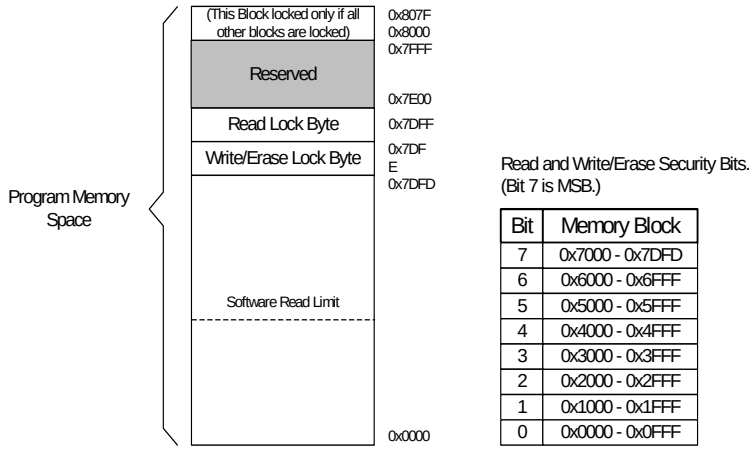

Bit	Memory Block
7	0x7000 - 0x7DFD
6	0x6000 - 0x6FFF
5	0x5000 - 0x5FFF
4	0x4000 - 0x4FFF
3	0x3000 - 0x3FFF
2	0x2000 - 0x2FFF
1	0x1000 - 0x1FFF
0	0x0000 - 0x0FFF

FLASH Read Lock Byte

Bits7-0: Each bit locks a corresponding block of memory. (Bit 7 is MSB.)

0: Read operations are locked (disabled) for corresponding block across the JTAG interface.

1: Read operations are unlocked (enabled) for corresponding block across the JTAG interface.

FLASH Write/Erase Lock Byte

Bits7-0: Each bit locks a corresponding block of memory.

0: Write/Erase operations are locked (disabled) for corresponding block across the JTAG interface.

1: Write/Erase operations are unlocked (enabled) for corresponding block across the JTAG interface.

FLASH Access Limit Register (FLACL)

The content of this register is used as the high byte of the 16-bit software read limit address. The 16-bit read limit address value is calculated as 0xNN00 where NN is replaced by the contents of this register. Software running at or above this address is prohibited from using the MOVX or MOVC instructions to read, write, or erase, locations below this address. Any attempts to read locations below this limit will return the value 0x00.

The lock bits can always be read and cleared to logic 0 regardless of the security setting applied to the block containing the security bytes. This allows additional blocks to be protected after the block containing the security bytes has been locked. However, the only means of removing a lock once set is to erase the entire program memory space by performing a JTAG erase operation (i.e. cannot be done in user firmware). **NOTE: Addressing either security byte while performing a JTAG erase operation will automatically initiate erasure of the entire program memory space (except for the reserved area). This erasure can only be performed via JTAG. If a non-security byte in the 0x7C00-0x7DFF page is addressed during erasure, only that page (including the security bytes) will be erased.**

The Flash Access Limit security feature (see Figure 11.3) protects proprietary program code and data from being read by software running on the C8051F005/06/07/15/16/17 MCUs. This feature provides support for OEMs that wish to program the MCU with proprietary value-added firmware before distribution. The value-added firmware can be protected while allowing additional code to be programmed in remaining program memory space later.

The Software Read Limit (SRL) is a 16-bit address that establishes two logical partitions in the program memory space. The first is an upper partition consisting of all the program memory locations at or above the SRL address, and the second is a lower partition consisting of all the program memory locations starting at 0x0000 up to (but excluding) the SRL address. Software in the upper partition can execute code in the lower partition, but is

prohibited from reading locations in the lower partition using the MOVC instruction. (Executing a MOVC instruction from the upper partition with a source address in the lower partition will always return a data value of 0x00.) Software running in the lower partition can access locations in both the upper and lower partition without restriction.

The Value-added firmware should be placed in the lower partition. On reset, control is passed to the value-added firmware via the reset vector. Once the value-added firmware completes its initial execution, it branches to a predetermined location in the upper partition. If entry points are published, software running in the upper partition may execute program code in the lower partition, but it cannot read the contents of the lower partition. Parameters may be passed to the program code running in the lower partition either through the typical method of placing them on the stack or in registers before the call or by placing them in prescribed memory locations in the upper partition.

The SRL address is specified using the contents of the Flash Access Register. The 16-bit SRL address is calculated as 0xNN00, where NN is the contents of the SRL Security Register. Thus, the SRL can be located on 256-byte boundaries anywhere in program memory space. However, the 512-byte erase sector size essentially requires that a 512 boundary be used. The contents of a non-initialized SRL security byte is 0x00, thereby setting the SRL address to 0x0000 and allowing read access to all locations in program memory space by default.

Figure 11.3. FLACL: Flash Access Limit (C8051F005/06/07/15/16/17 only)

R/W	R/W	R/W	R/W	R/W	R/W	R/W	R/W	Reset Value
								00000000
Bit7	Bit6	Bit5	Bit4	Bit3	Bit2	Bit1	Bit0	SFR Address: 0xB7

Bits 7-0: FLACL: Flash Access Limit.
This register holds the high byte of the 16-bit program memory read/write/erase limit address. The entire 16-bit access limit address value is calculated as 0xNN00 where NN is replaced by contents of FLACL. A write to this register sets the Flash Access Limit. **This register can only be written once after any reset. Any subsequent writes are ignored until the next reset.**

Figure 11.4. FLSCL: Flash Memory Timing Prescaler

R/W	R/W	R/W	R/W	R/W	R/W	R/W	R/W	Reset Value
FOSE	FRAE	-	-	FLASCL				10001111
Bit7	Bit6	Bit5	Bit4	Bit3	Bit2	Bit1	Bit0	SFR Address: 0xB6

Bit7: FOSE: Flash One-Shot Timer Enable
0: Flash One-shot timer disabled.
1: Flash One-shot timer enabled

Bit6: FRAE: Flash Read Always Enable
0: Flash reads per one-shot timer
1: Flash always in read mode

Bits5-4: UNUSED. Read = 00b, Write = don't care.

Bits3-0: FLASCL: Flash Memory Timing Prescaler.
This register specifies the prescaler value for a given system clock required to generate the correct timing for Flash write/erase operations. If the prescaler is set to 1111b, Flash write/erase operations are disabled.
0000: System Clock < 50kHz
0001: 50kHz ≤ System Clock < 100kHz
0010: 100kHz ≤ System Clock < 200kHz
0011: 200kHz ≤ System Clock < 400kHz
0100: 400kHz ≤ System Clock < 800kHz
0101: 800kHz ≤ System Clock < 1.6MHz
0110: 1.6MHz ≤ System Clock < 3.2MHz
0111: 3.2MHz ≤ System Clock < 6.4MHz
1000: 6.4MHz ≤ System Clock < 12.8MHz
1001: 12.8MHz ≤ System Clock < 25.6MHz
1010: 25.6MHz ≤ System Clock < 51.2MHz *
1011, 1100, 1101, 1110: Reserved Values
1111: Flash Memory Write/Erase Disabled

The prescaler value is the smallest value satisfying the following equation:
FLASCL > $\log_2$(System Clock / 50kHz)

* For test purposes. The C8051F000 family is not guaranteed for operation over 25MHz.

12. EXTERNAL RAM (C8051F005/06/07/15/16/17)

The C8051F005/06/07/15/16/17 MCUs include 2048 bytes of RAM mapped into the external data memory space. All of these address locations may be accessed using the external move instruction (MOVX) and the data pointer (DPTR), or using MOVX indirect addressing mode. If the MOVX instruction is used with an 8-bit address operand (such as @R1), then the high byte of the 16-bit address is provided by the External Memory Interface Control Register (EMI0CN as shown in Figure 12.1). **Note: the MOVX instruction is also used for writes to the Flash memory. See Section 11 for details. The MOVX instruction accesses XRAM by default (i.e. PSTCL.0 = 0).**

For any of the addressing modes the upper 5-bits of the 16-bit external data memory address word are “don’t cares”. As a result, the 2048-byte RAM is mapped modulo style over the entire 64k external data memory address range. For example, the XRAM byte at address 0x0000 is also at address 0x0800, 0x1000, 0x1800, 0x2000, etc. This is a useful feature when doing a linear memory fill, as the address pointer doesn’t have to be reset when reaching the RAM block boundary.

Figure 12.1. EMI0CN: External Memory Interface Control

R	R	R	R	R	R/W	R/W	R/W	Reset Value
-	-	-	-	-	PGSEL2	PGSEL1	PGSEL0	00000000
Bit7	Bit6	Bit5	Bit4	Bit3	Bit2	Bit1	Bit0	SFR Address: 0xAF

Bits 7-3: Not Used – reads 00000b

Bits 2-0: PGSEL[2:0]: XRAM Page Select Bits

The XRAM Page Select Bits provide the high byte of the 16-bit external data memory address when using an 8-bit MOVX command, effectively selecting a 256-byte page of RAM. The upper 5-bits are “don’t cares”, so the 2k address blocks are repeated modulo over the entire 64k external data memory address space.

000: xxxxx000b
001: xxxxx001b
010: xxxxx010b
011: xxxxx011b
100: xxxxx100b
101: xxxxx101b
110: xxxxx110b
111: xxxxx111b

13. RESET SOURCES

The reset circuitry of the MCUs allows the controller to be easily placed in a predefined default condition. On entry to this reset state, the CIP-51 halts program execution, forces the external port pins to a known state and initializes the SFRs to their defined reset values. Interrupts and timers are disabled. On exit, the program counter (PC) is reset, and program execution starts at location 0x0000.

All of the SFRs are reset to predefined values. The reset values of the SFR bits are defined in the SFR detailed descriptions. The contents of internal data memory are not changed during a reset and any previously stored data is preserved. However, since the stack pointer SFR is reset, the stack is effectively lost even though the data on the stack are not altered.

The I/O port latches are reset to 0xFF (all logic ones), activating internal weak pull-ups which take the external I/O pins to a high state. The weak pull-ups are enabled during and after the reset. If the source of reset is from the VDD Monitor or writing a 1 to PORSF, the /RST pin is driven low until the end of the VDD reset timeout.

On exit from the reset state, the MCU uses the internal oscillator running at 2MHz as the system clock by default. Refer to Section 14 for information on selecting and configuring the system clock source. The Watchdog Timer is enabled using its longest timeout interval. (Section 13.8 details the use of the Watchdog Timer.)

There are seven sources for putting the MCU into the reset state: power-on/power-fail, external /RST pin, external CNVSTR signal, software commanded, Comparator 0, Missing Clock Detector, and Watchdog Timer. Each reset source is described below:

Figure 13.1. Reset Sources Diagram

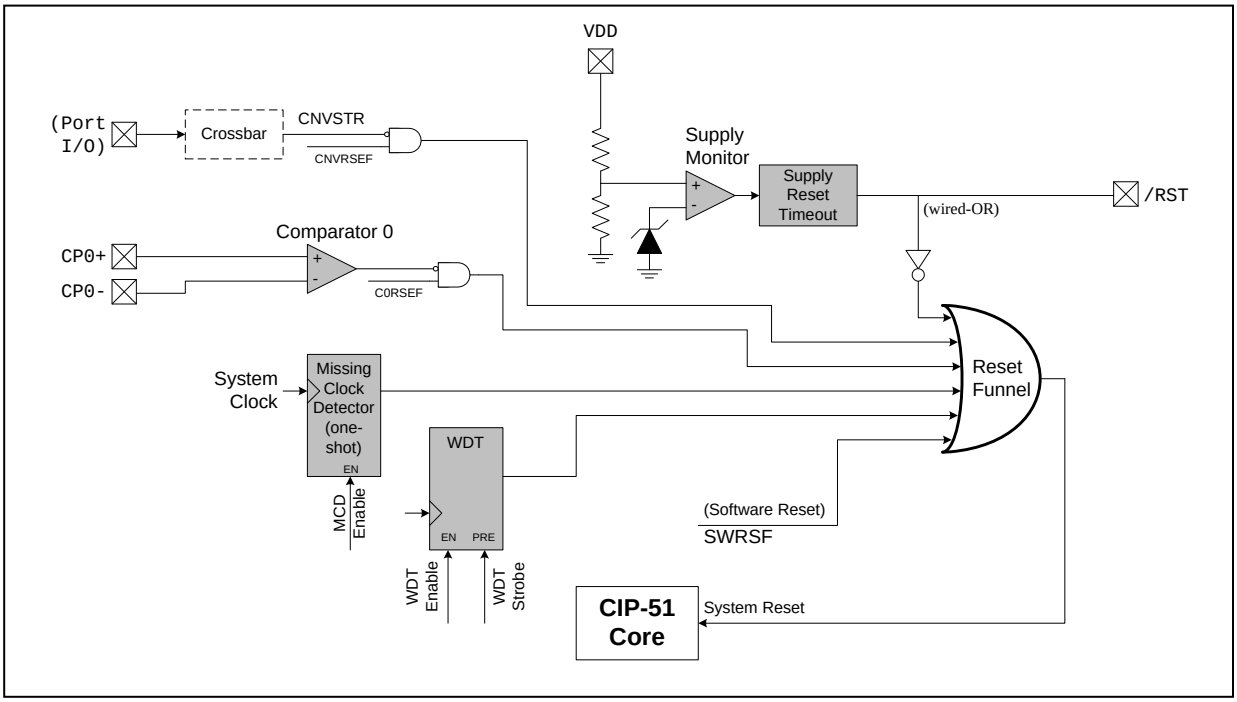

13.1. Power-on Reset

The C8051F000 family incorporates a power supply monitor that holds the MCU in the reset state until VDD rises above the V_{RST} level during power-up. (See Figure 13.2 for timing diagram, and refer to Table 13.1 for the Electrical Characteristics of the power supply monitor circuit.) The /RST pin is asserted (low) until the end of the 100ms VDD Monitor timeout in order to allow the VDD supply to become stable.

On exit from a power-on reset, the PORSF flag (RSTSRC.1) is set by hardware to logic 1. All of the other reset flags in the RSTSRC Register are indeterminate. PORSF is cleared by a reset from any other source. Since all resets cause program execution to begin at the same location (0x0000), software can read the PORSF flag to determine if a power-up was the cause of reset. The content of internal data memory should be assumed to be undefined after a power-on reset.

13.2. Software Forced Reset

Writing a 1 to the PORSF bit forces a Power-On Reset as described in Section 13.1.

Figure 13.2. VDD Monitor Timing Diagram

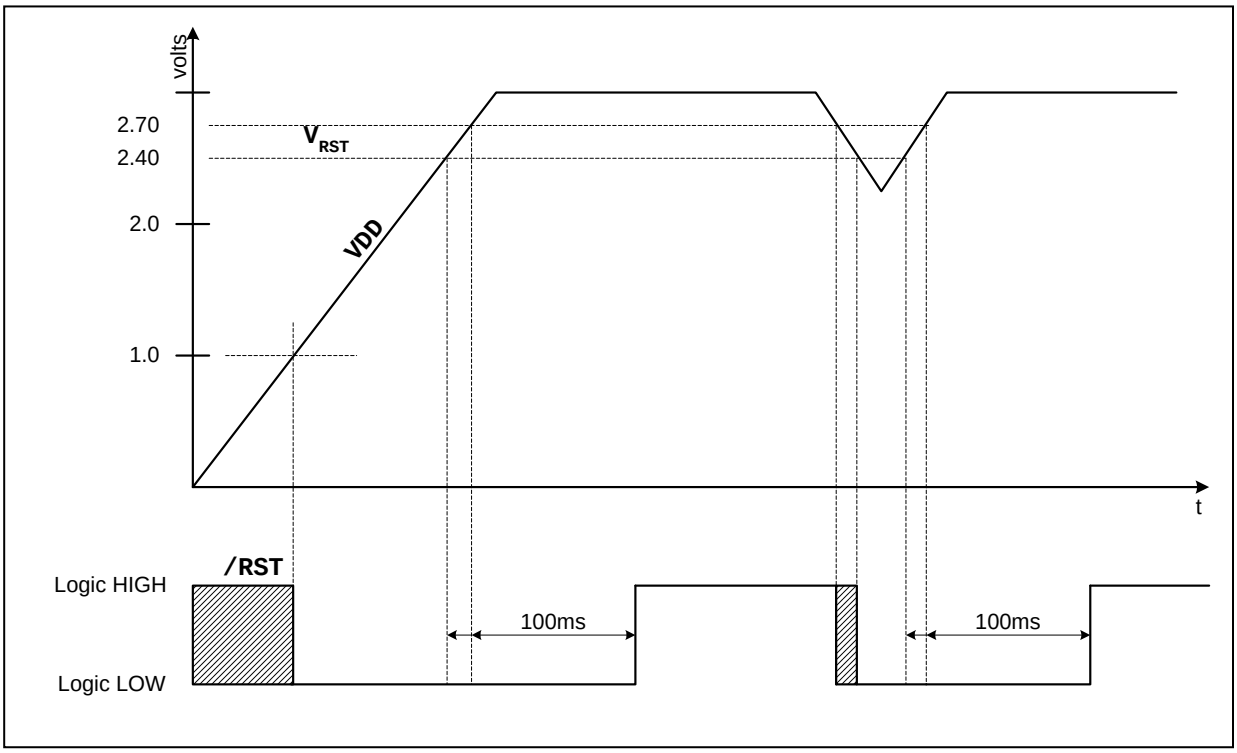

13.3. Power-fail Reset

When a power-down transition or power irregularity causes VDD to drop below V_{RST}, the power supply monitor will drive the /RST pin low and return the CIP-51 to the reset state (see Figure 13.2). When VDD returns to a level above V_{RST}, the CIP-51 will leave the reset state in the same manner as that for the power-on reset. Note that even though internal data memory contents are not altered by the power-fail reset, it is impossible to determine if VDD dropped below the level required for data retention. If the PORSF flag is set, the data may no longer be valid.

13.4. External Reset

The external /RST pin provides a means for external circuitry to force the MCU into a reset state. Asserting an active-low signal on the /RST pin will cause the MCU to enter the reset state. Although there is a weak internal pullup, it may be desirable to provide an external pull-up and/or decoupling of the /RST pin to avoid erroneous noise-induced resets. The MCU will remain in reset until at least 12 clock cycles after the active-low /RST signal is removed. The PINRSF flag (RSTSRC.0) is set on exit from an external reset. The /RST pin is also 5V tolerant.

13.5. Missing Clock Detector Reset

The Missing Clock Detector is essentially a one-shot circuit that is triggered by the MCU system clock. If the system clock goes away for more than 100µs, the one-shot will time out and generate a reset. After a Missing Clock Detector reset, the MCDRSF flag (RSTSRC.2) will be set, signifying the MSD as the reset source; otherwise, this bit reads 0. The state of the /RST pin is unaffected by this reset. Setting the MSCLKE bit in the OSCICN register (see Figure 14.2) enables the Missing Clock Detector.

13.6. Comparator 0 Reset

Comparator 0 can be configured as an active-low reset input by writing a 1 to the C0RSEF flag (RSTSRC.5). Comparator 0 should be enabled using CPT0CN.7 (see Figure 8.3) at least 20µs prior to writing to C0RSEF to prevent any turn-on chatter on the output from generating an unwanted reset. When configured as a reset, if the non-inverting input voltage (on CP0+) is less than the inverting input voltage (on CP0-), the MCU is put into the reset state. After a Comparator 0 Reset, the C0RSEF flag (RSTSRC.5) will read 1 signifying Comparator 0 as the reset source; otherwise, this bit reads 0. The state of the /RST pin is unaffected by this reset. Also, Comparator 0 can generate a reset with or without the system clock.

13.7. External CNVSTR Pin Reset

The external CNVSTR signal can be configured as an active-low reset input by writing a 1 to the CNVRSEF flag (RSTSRC.6). The CNVSTR signal can appear on any of the P0, P1, or P2 I/O pins as described in Section 15.1. (Note that the Crossbar must be configured for the CNVSTR signal to be routed to the appropriate Port I/O.) The Crossbar should be configured and enabled before the CNVRSEF is set to configure CNVSTR as a reset source. When configured as a reset, CNVSTR is active-low and level sensitive. After a CNVSTR reset, the CNVRSEF flag (RSTSRC.6) will read 1 signifying CNVSTR as the reset source; otherwise, this bit reads 0. The state of the /RST pin is unaffected by this reset.

13.8. Watchdog Timer Reset

The MCU includes a programmable Watchdog Timer (WDT) running off the system clock. The WDT will force the MCU into the reset state when the watchdog timer overflows. To prevent the reset, the WDT must be restarted by application software before the overflow occurs. If the system experiences a software/hardware malfunction preventing the software from restarting the WDT, the WDT will overflow and cause a reset. This should prevent the system from running out of control.

The WDT is automatically enabled and started with the default maximum time interval on exit from all resets. If desired the WDT can be disabled by system software or locked on to prevent accidental disabling. Once locked, the WDT cannot be disabled until the next system reset. The state of the /RST pin is unaffected by this reset.

13.8.1. Watchdog Usage

The WDT consists of a 21-bit timer running from the programmed system clock. The timer measures the period between specific writes to its control register. If this period exceeds the programmed limit, a WDT reset is generated. The WDT can be enabled and disabled as needed in software, or can be permanently enabled if desired. Watchdog features are controlled via the Watchdog Timer Control Register (WDTCN) shown in Figure 13.3.

Enable/Reset WDT

The watchdog timer is both enabled and the countdown restarted by writing 0xA5 to the WDTCN register. The user's application software should include periodic writes of 0xA5 to WDTCN as needed to prevent a watchdog timer overflow. The WDT is enabled and restarted as a result of any system reset.

Disable WDT

Writing 0xDE followed by 0xAD to the WDTCN register disables the WDT. The following code segment illustrates disabling the WDT.

```
CLR   EA          ; disable all interrupts
MOV   WDTCN,#0DEh ; disable software
MOV   WDTCN,#0ADh ; watchdog timer
SETB  EA          ; re-enable interrupts
```

The writes of 0xDE and 0xAD must occur within 4 clock cycles of each other, or the disable operation is ignored. Interrupts should be disabled during this procedure to avoid delay between the two writes.

Disable WDT Lockout

Writing 0xFF to WDTCN locks out the disable feature. Once locked out, the disable operation is ignored until the next system reset. Writing 0xFF does not enable or reset the watchdog timer. Applications always intending to use the watchdog should write 0xFF to WDTCN in their initialization code.

Setting WDT Interval

WDTCN.[2:0] control the watchdog timeout interval. The interval is given by the following equation:

$$4^{3+WDTCN[2:0]} \times T_{SYSCLK}\text{, (where } T_{SYSCLK} \text{ is the system clock period).}$$

For a 2MHz system clock, this provides an interval range of 0.032msec to 524msec. WDTCN.7 must be a 0 when setting this interval. Reading WDTCN returns the programmed interval. WDTCN.[2:0] is 111b after a system reset.

Figure 13.3. WDTCN: Watchdog Timer Control Register

R/W	R/W	R/W	R/W	R/W	R/W	R/W	R/W	Reset Value
								xxxxx111
Bit7	Bit6	Bit5	Bit4	Bit3	Bit2	Bit1	Bit0	SFR Address: 0xFF

Bits7-0: WDT Control
Writing 0xA5 both enables and reloads the WDT.
Writing 0xDE followed within 4 clocks by 0xAD disables the WDT.
Writing 0xFF locks out the disable feature.

Bit4: Watchdog Status Bit (when Read)
Reading the WDTCN.[4] bit indicates the Watchdog Timer Status.
0: WDT is inactive
1: WDT is active

Bits2-0: Watchdog Timeout Interval Bits
The WDTCN.[2:0] bits set the Watchdog Timeout Interval. When writing these bits, WDTCN.7 must be set to 0.

Figure 13.4. RSTSRC: Reset Source Register

R	R/W	R/W	R/W	R	R	R/W	R	Reset Value
JTAGRST	CNVRSEF	C0RSEF	SWRSEF	WDTRSF	MCDRSF	PORSF	PINRSF	xxxxxxxx
Bit7	Bit6	Bit5	Bit4	Bit3	Bit2	Bit1	Bit0	SFR Address: 0xEF

(Note: Do not use read-modify-write operations on this register.)

Bit7: JTAGRST. JTAG Reset Flag.
0: JTAG is not currently in reset state.
1: JTAG is in reset state.

Bit6: CNVRSEF: Convert Start Reset Source Enable and Flag
Write
0: CNVSTR is not a reset source
1: CNVSTR is a reset source (active low)
Read
0: Source of prior reset was not from CNVSTR
1: Source of prior reset was from CNVSTR

Bit5: C0RSEF: Comparator 0 Reset Enable and Flag
Write
0: Comparator 0 is not a reset source
1: Comparator 0 is a reset source (active low)
Read
Note: The value read from C0RSEF is not defined if Comparator 0 has not been enabled as a reset source.
0: Source of prior reset was not from Comparator 0
1: Source of prior reset was from Comparator 0

Bit4: SWRSF: Software Reset Force and Flag
Write
0: No Effect
1: Forces an internal reset. /RST pin is not effected.
Read
0: Prior reset source was not from write to the SWRSF bit.
1: Prior reset source was from write to the SWRSF bit.

Bit3: WDTRSF: Watchdog Timer Reset Flag
0: Source of prior reset was not from WDT timeout.
1: Source of prior reset was from WDT timeout.

Bit2: MCDRSF: Missing Clock Detector Flag
0: Source of prior reset was not from Missing Clock Detector timeout.
1: Source of prior reset was from Missing Clock Detector timeout.

Bit1: PORSF: Power-On Reset Force and Flag
Write
0: No effect
1: Forces a Power-On Reset. /RST is driven low.
Read
0: Source of prior reset was not from POR.
1: Source of prior reset was from POR.

Bit0: PINRSF: HW Pin Reset Flag
0: Source of prior reset was not from /RST pin.
1: Source of prior reset was from /RST pin.

Table 13.1. Reset Electrical Characteristics

-40°C to +85°C unless otherwise specified.

PARAMETER	CONDITIONS	MIN	TYP	MAX	UNITS
/RST Output Low Voltage	I_{OL} = 8.5mA, VDD = 2.7 to 3.6V			0.6	V
/RST Input High Voltage		0.7 x VDD			V
/RST Input Low Voltage				0.3 x VDD	V
/RST Input Leakage Current	/RST = 0.0V		20		µA
VDD for /RST Output Valid		1.0			V
AV+ for /RST Output Valid		1.0			V
VDD POR Threshold (V_{RST})		2.40	2.55	2.70	V
Reset Time Delay	/RST rising edge after crossing reset threshold	80	100	120	ms
Missing Clock Detector Timeout	Time from last system clock to reset generation	100	220	500	µs

14. OSCILLATOR

Each MCU includes an internal oscillator and an external oscillator drive circuit, either of which can generate the system clock. The MCUs boot from the internal oscillator after any reset. The internal oscillator starts up instantly. It can be enabled/disabled and its frequency can be changed using the Internal Oscillator Control Register (OSCICN) as shown in Figure 14.2. The internal oscillator's electrical specifications are given in Table 14.1.

Both oscillators are disabled when the /RST pin is held low. The MCUs can run from the internal oscillator or external oscillator, and switch between the two at will using the CLKSL bit in the OSCICN Register. The external oscillator requires an external resonator, parallel-mode crystal, capacitor, or RC network connected to the XTAL1/XTAL2 pins (see Figure 14.1). The oscillator circuit must be configured for one of these sources in the OSCXCN register. An external CMOS clock can also provide the system clock via overdriving the XTAL1 pin. The XTAL1 and XTAL2 pins are 3.6V (not 5V) tolerant. The external oscillator can be left enabled and running even when the MCU has switched to using the internal oscillator.

Figure 14.1. Oscillator Diagram

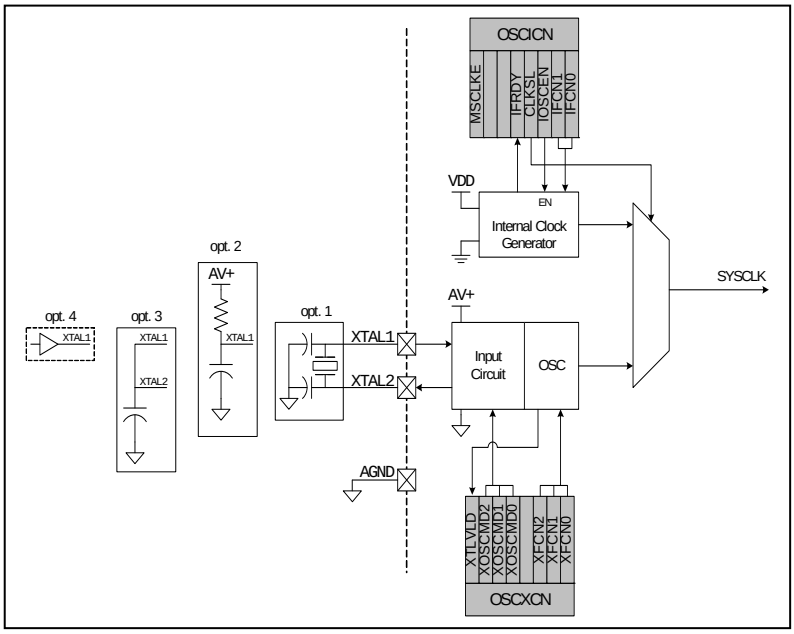

Figure 14.2. OSCICN: Internal Oscillator Control Register

R/W	R/W	R/W	R	R/W	R/W	R/W	R/W	Reset Value
MSCLKE	-	-	IFRDY	CLKSL	IOSCEN	IFCN1	IFCN0	00000100
Bit7	Bit6	Bit5	Bit4	Bit3	Bit2	Bit1	Bit0	SFR Address: 0xB2

Bit7: MSCLKE: Missing Clock Enable Bit
0: Missing Clock Detector Disabled
1: Missing Clock Detector Enabled; triggers a reset if a missing clock is detected
Bits6-5: UNUSED. Read = 00b, Write = don't care
Bit4: IFRDY: Internal Oscillator Frequency Ready Flag
0: Internal Oscillator Frequency not running at speed specified by the IFCN bits.
1: Internal Oscillator Frequency running at speed specified by the IFCN bits.
Bit3: CLKSL: System Clock Source Select Bit
0: Uses Internal Oscillator as System Clock.
1: Uses External Oscillator as System Clock.
Bit2: IOSCEN: Internal Oscillator Enable Bit
0: Internal Oscillator Disabled
1: Internal Oscillator Enabled
Bits1-0: IFCN1-0: Internal Oscillator Frequency Control Bits
00: Internal Oscillator typical frequency is 2MHz.
01: Internal Oscillator typical frequency is 4MHz.
10: Internal Oscillator typical frequency is 8MHz.
11: Internal Oscillator typical frequency is 16MHz.

Table 14.1. Internal Oscillator Electrical Characteristics

-40°C to +85°C unless otherwise specified.

PARAMETER	CONDITIONS	MIN	TYP	MAX	UNITS
Internal Oscillator Frequency	OSCICN.[1:0] = 00 OSCICN.[1:0] = 01 OSCICN.[1:0] = 10 OSCICN.[1:0] = 11	1.5 3.1 6.2 12.3	2 4 8 16	2.4 4.8 9.6 19.2	MHz
Internal Oscillator Current Consumption (from VDD)	OSCICN.2 = 1		200		µA
Internal Oscillator Temperature Stability			4		ppm/°C
Internal Oscillator Power Supply (VDD) Stability			6.4		%/V

Figure 14.3. OSCXCN: External Oscillator Control Register

R	R/W	R/W	R/W	R/W	R/W	R/W	R/W	Reset Value
XTLVLD	XOSCMD2	XOSCMD1	XOSCMD0	-	XFCN2	XFCN1	XFCN0	00110000
Bit7	Bit6	Bit5	Bit4	Bit3	Bit2	Bit1	Bit0	SFR Address: 0xB1

Bit7: XTLVLD: Crystal Oscillator Valid Flag
(Valid only when XOSCMD = 1xx.)
0: Crystal Oscillator is unused or not yet stable
1: Crystal Oscillator is running and stable (should read 1ms after Crystal Oscillator is enabled to avoid transient condition).

Bits6-4: XOSCMD2-0: External Oscillator Mode Bits
00x: Off. XTAL1 pin is grounded internally.
010: System Clock from External CMOS Clock on XTAL1 pin.
011: System Clock from External CMOS Clock on XTAL1 pin divided by 2.
10x: RC/C Oscillator Mode with divide by 2 stage.
110: Crystal Oscillator Mode
111: Crystal Oscillator Mode with divide by 2 stage.

Bit3: RESERVED. Read = undefined, Write = don't care

Bits2-0: XFCN2-0: External Oscillator Frequency Control Bits
000-111: see table below

XFCN	Crystal (XOSCMD = 11x)	RC (XOSCMD = 10x)	C (XOSCMD = 10x)
000	f ≤ 12.5kHz	f ≤ 25kHz	K Factor = 0.44
001	12.5kHz < f ≤ 30.3kHz	25kHz < f ≤ 50kHz	K Factor = 1.4
010	30.35kHz < f ≤ 93.8kHz	50kHz < f ≤ 100kHz	K Factor = 4.4
011	93.8kHz < f ≤ 267kHz	100kHz < f ≤ 200kHz	K Factor = 13
100	267kHz < f ≤ 722kHz	200kHz < f ≤ 400kHz	K Factor = 38
101	722kHz < f ≤ 2.23MHz	400kHz < f ≤ 800kHz	K Factor = 100
110	2.23MHz < f ≤ 6.74MHz	800kHz < f ≤ 1.6MHz	K Factor = 420
111	f > 6.74MHz	1.6MHz < f ≤ 3.2MHz	K Factor = 1400

CRYSTAL MODE (Circuit from Figure 14.1, Option 1; XOSCMD = 11x)
Choose XFCN value to match the crystal or ceramic resonator frequency.

RC MODE (Circuit from Figure 14.1, Option 2; XOSCMD = 10x)
Choose oscillation frequency range where:
$f = 1.23(10^3) / (R * C)$, where
f = frequency of oscillation in MHz
C = capacitor value in pF
R = Pull-up resistor value in kΩ

C MODE (Circuit from Figure 14.1, Option 3; XOSCMD = 10x)
Choose K Factor (KF) for the oscillation frequency desired:
f = KF / (C * AV+), where
f = frequency of oscillation in MHz
C = capacitor value on XTAL1, XTAL2 pins in pF
AV+ = Analog Power Supply on MCU in volts

14.1. External Crystal Example

If a crystal or ceramic resonator were used to generate the system clock for the MCU, the circuit would be as shown in Figure 14.1, Option 1. For an ECS-110.5-20-4 crystal, the resonate frequency is 11.0592MHz, the intrinsic capacitance is 7pF, and the ESR is 60Ω. The compensation capacitors should be 33pF each, and the PWB parasitic capacitance is estimated to be 2pF. The appropriate External Oscillator Frequency Control value (XFCN) from the Crystal column in the table in Figure 14.3 (OSCXCN Register) should be 111b.

Because the oscillator detect circuitry needs time to settle after the crystal oscillator is enabled, software should wait at least 1ms between enabling the crystal oscillator and polling the XTLVLD bit. The recommend procedure is:
1. Enable the external oscillator
2. Wait at least 1 ms
3. Poll for XTLVLD '0' ==> '1'
4. Switch to the external oscillator

Switching to the external oscillator before the crystal oscillator has stabilized could result in unpredictable behavior.

NOTE: Crystal oscillator circuits are quite sensitive to PCB layout. The crystal should be placed as close as possible to the XTAL pins on the device, keeping the traces as short as possible and shielded with ground plane from any other traces which could introduce noise or interference.

14.2. External RC Example

If an external RC network were used to generate the system clock for the MCU, the circuit would be as shown in Figure 14.1, Option 2. The capacitor must be no greater than 100pF, but using a very small capacitor will increase the frequency drift due to the PWB parasitic capacitance. To determine the required External Oscillator Frequency Control value (XFCN) in the OSCXCN Register, first select the RC network value to produce the desired frequency of oscillation. If the frequency desired is 100kHz, let R = 246kΩ and C = 50pF:

$$f = 1.23(10^3)/RC = 1.23(10^3) / [246 * 50] = 0.1\text{MHz} = 100\text{kHz}$$

$$XFCN \geq \log_2(f/25\text{kHz})$$
$$XFCN \geq \log_2(100\text{kHz}/25\text{kHz}) = \log_2(4)$$
$$XFCN \geq 2, \text{ or code } 010$$

14.3. External Capacitor Example

If an external capacitor were used to generate the system clock for the MCU, the circuit would be as shown in Figure 14.1, Option 3. The capacitor must be no greater than 100pF, but using a very small capacitor will increase the frequency inaccuracy due to the PWB parasitic capacitance. To determine the required External Oscillator Frequency Control value (XFCN) in the OSCXCN Register, select the capacitor to be used and find the frequency of oscillation from the equations below. Assume AV+ = 3.0V and C = 50pF:

$$f = KF / (C * VDD) = KF / (50 * 3)$$
$$f = KF / 150$$

If a frequency of roughly 90kHz is desired, select the K Factor from the table in Figure 14.3 as KF = 13:

$$f = 13 /150 = 0.087\text{MHz, or } 87\text{kHz}$$

Therefore, the XFCN value to use in this example is 011.

15. PORT INPUT/OUTPUT

The MCUs have a wide array of digital resources, which are available through four digital I/O ports, P0, P1, P2 and P3. Each of the pins on Ports 0, 1, and 2 can be defined as either its corresponding port I/O or one of the internal digital resources assigned as shown in Figure 15.1. The designer has complete control over which functions are assigned, limited only by the number of physical I/O pins available on the selected package (the C8051F000/05/10/15 have all four ports pinned out, the F001/06/11/16 have P0 and P1, and the F002/07/12/17 have P0). This resource assignment flexibility is achieved through the use of a Priority CrossBar Decoder. (Note that the state of a Port I/O pin can always be read in the corresponding Port latch regardless of the Crossbar settings).

The CrossBar assigns the selected internal digital resources to the I/O pins based on the Priority Decode Table 15.1. The registers XBR0, XBR1, and XBR2, defined in Figure 15.3, Figure 15.4, and Figure 15.5 are used to select an internal digital function or let an I/O pin default to being a Port I/O. The crossbar functions identically for each MCU, with the caveat that P2 is not pinned out on the F001/06/11/16, and both P1 and P2 are not pinned out on the F002/07/12/17. Digital resources assigned to port pins that are not pinned out cannot be accessed.

All Port I/Os are 5V tolerant (Refer to Figure 15.2 for the port cell circuit.) The Port I/O cells are configured as either push-pull or open-drain in the Port Configuration Registers (PRT0CF, PRT1CF, PRT2CF, PRT3CF). Complete Electrical Specifications for Port I/O are given in Table 15.2.

15.1. Priority Cross Bar Decoder

One of the design goals of this MCU family was to make the entire palette of digital resources available to the designer even on reduced pin count packages. The Priority CrossBar Decoder provides an elegant solution to the problem of connecting the internal digital resources to the physical I/O pins.

The Priority CrossBar Decode (Table 15.1) assigns a priority to each I/O function, starting at the top with the SMBus. As the table illustrates, when selected, its two signals will be assigned to Pin 0 and 1 of I/O Port 0. The decoder always fills I/O bits from LSB to MSB starting with Port 0, then Port 1, finishing if necessary with Port 2. If you choose not to use a resource, the next function down on the table will fill the priority slot. In this way it is possible to choose only the functions required by the design, making full use of the available I/O pins. Also, any extra Port I/O are grouped together for more convenient use in application code.

Registers XBR0, XBR1 and XBR2 are used to assign the digital I/O resources to the physical I/O Port pins. It is important to understand that when the SMBus, SPI Bus, or UART is selected, the crossbar assigns all pins associated with the selected bus. It would be impossible for instance to assign the RX pin from the UART function without also assigning the TX function. Standard Port I/Os appear contiguously after the prioritized functions have been assigned. For example, if you choose functions that take the first 14 Port I/O (P0.[7:0], P1.[5:0]), you would have 18 Port I/O left unused by the crossbar (P1.[7:6], P2 and P3).

15.2. Port I/O Initialization

Port I/O initialization is straightforward. Registers XBR0, XBR1 and XBR2 must be loaded with the appropriate values to select the digital I/O functions required by the design. Setting the XBARE bit in XBR2 to 1 enables the CrossBar. **Until the Crossbar is enabled, the external pins remain as standard Ports in input mode regardless of the XBRn Register settings.** For given XBRn Register settings, one can determine the I/O pin-out using the Priority Decode Table; as an alternative, the Code Configuration Wizard function of the IDE software will determine the Port I/O pin-assignments based on the XBRn Register settings.

The output driver characteristics of the I/O pins are defined using the Port Configuration Registers PRT0CF, PRT1CF, PRT2CF and PRT3CF (see Figure 15.7, Figure 15.9, Figure 15.12, and Figure 15.14). Each Port Output driver can be configured as either Open Drain or Push-Pull. This is required even for the digital resources selected in the XBRn registers and is not automatic. The only exception to this is the SMBus (SDA, SCL) and UART Receive (RX, when in mode 0) pins which are Open-drain regardless of the PRTnCF settings. When the WEAKPUD bit in XBR2 is 0, a weak pullup is enabled for all Port I/O configured as open-drain. WEAKPUD does

not affect the push-pull Port I/O. Furthermore, the weak pullup is turned off on an open-drain output that is driving a 0 to avoid unnecessary power dissipation.

The third and final step is to initialize the individual resources selected using the appropriate setup registers. Initialization procedures for the various digital resources may be found in the detailed explanation of each available function. The reset state of each register is shown in the figures that describe each individual register.

Figure 15.1. Port I/O Functional Block Diagram

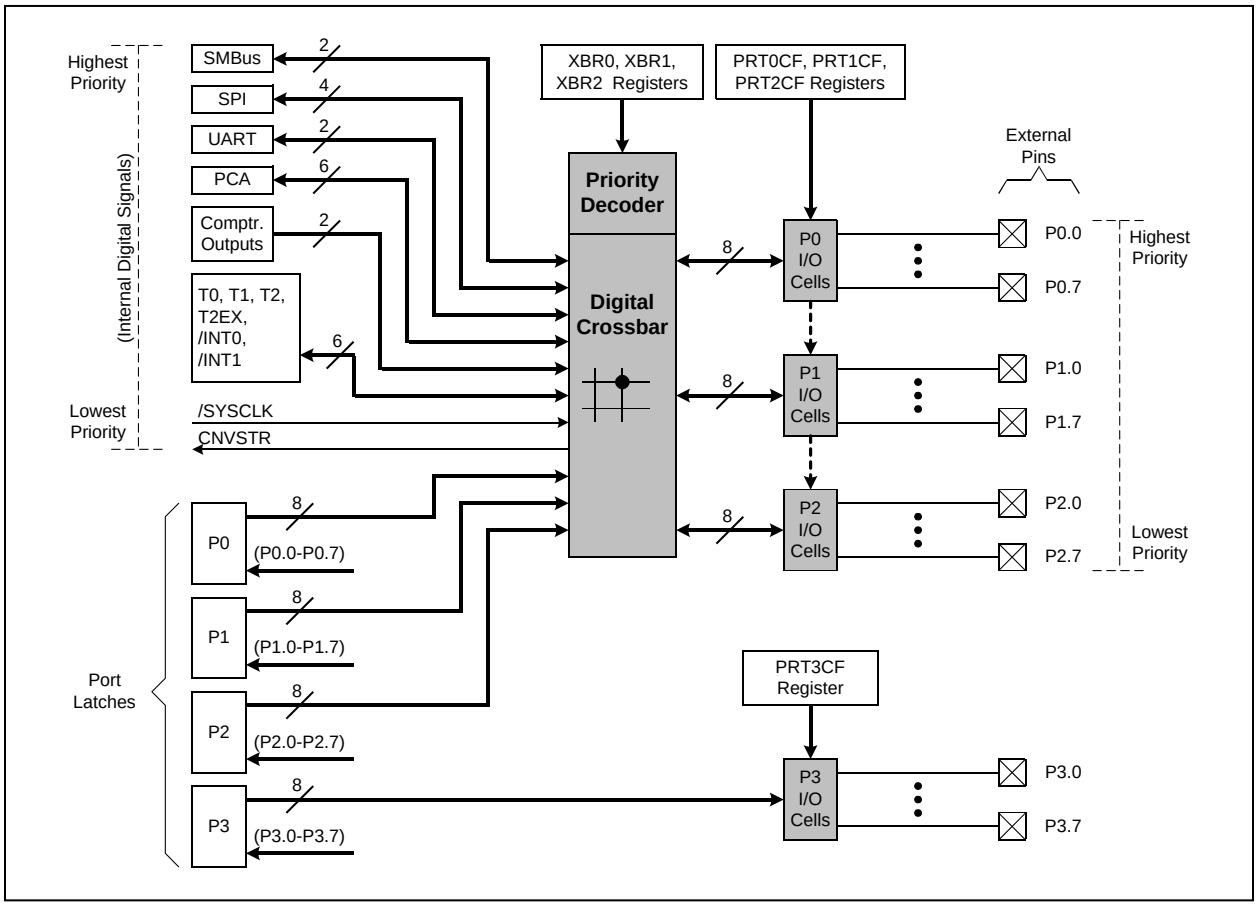

Figure 15.2. Port I/O Cell Block Diagram

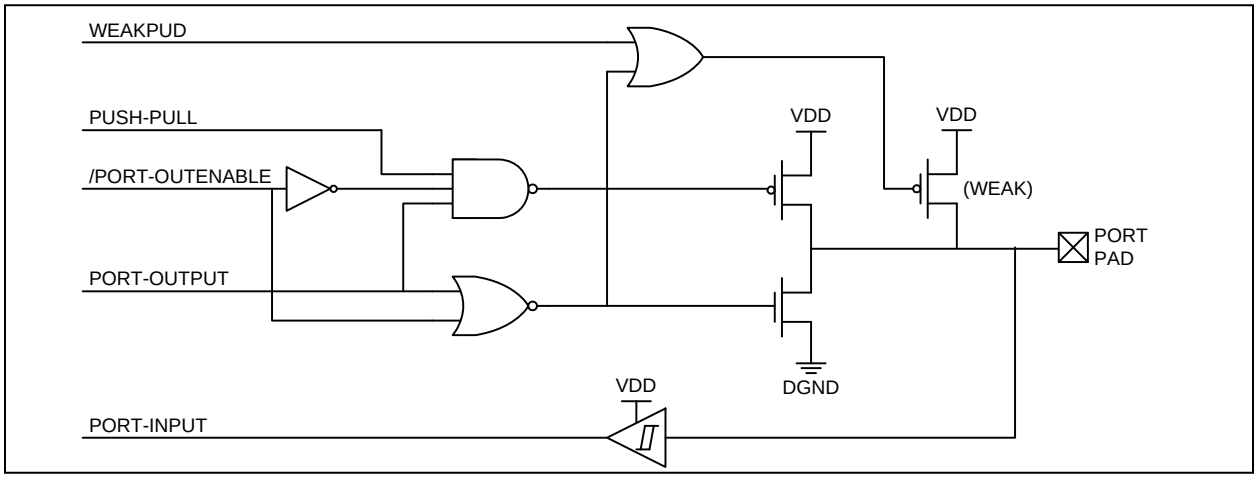

Table 15.1. Crossbar Priority Decode

	P0								P1								P2							
PIN I/O	0	1	2	3	4	5	6	7	0	1	2	3	4	5	6	7	0	1	2	3	4	5	6	7
SDA	●																							
SCL		●																						
SCK	●		●																					
MISO		●		●																				
MOSI			●		●																			
NSS				●		●																		
TX	●		●		●		●																	
RX		●		●		●		●																
CEX0	●		●		●		●		●															
CEX1		●		●		●		●		●														
CEX2			●		●		●		●		●													
CEX3				●		●		●		●		●												
CEX4					●		●		●		●		●											
ECI	●	●	●	●	●	●	●	●	●	●	●	●	●	●										
CP0	●	●	●	●	●	●	●	●	●	●	●	●	●	●	●									
CP1	●	●	●	●	●	●	●	●	●	●	●	●	●	●	●	●								
T0	●	●	●	●	●	●	●	●	●	●	●	●	●	●	●	●	●							
/INT0	●	●	●	●	●	●	●	●	●	●	●	●	●	●	●	●	●	●						
T1	●	●	●	●	●	●	●	●	●	●	●	●	●	●	●	●	●	●	●					
/INT1	●	●	●	●	●	●	●	●	●	●	●	●	●	●	●	●	●	●	●	●				
T2	●	●	●	●	●	●	●	●	●	●	●	●	●	●	●	●	●	●	●	●	●			
T2EX	●	●	●	●	●	●	●	●	●	●	●	●	●	●	●	●	●	●	●	●	●	●		
/SYSCLK	●	●	●	●	●	●	●	●	●	●	●	●	●	●	●	●	●	●	●	●	●	●	●	
CNVSTR	●	●	●	●	●	●	●	●	●	●	●	●	●	●	●	●	●	●	●	●	●	●	●	●

In the Priority Decode Table, a dot (•) is used to show the external Port I/O pin (column) to which each signal (row) can be assigned by the user application code via programming registers XBR2, XBR1, and XBR0.

Figure 15.3. XBR0: Port I/O CrossBar Register 0

R/W	R/W	R/W	R/W	R/W	R/W	R/W	R/W	Reset Value
CP0OEN	ECIE	PCA0ME			UARTEN	SPI0OEN	SMB0OEN	00000000
Bit7	Bit6	Bit5	Bit4	Bit3	Bit2	Bit1	Bit0	SFR Address: 0xE1

Bit7: CP0OEN: Comparator 0 Output Enable Bit
0: CP0 unavailable at Port pin.
1: CP0 routed to Port Pin.

Bit6: ECIE: PCA0 Counter Input Enable Bit
0: ECI unavailable at Port pin.
1: ECI routed to Port Pin.

Bits3-5: PCA0ME: PCA Module I/O Enable Bits
000: All PCA I/O unavailable at Port pins.
001: CEX0 routed to Port Pin.
010: CEX0, CEX1 routed to 2 Port Pins.
011: CEX0, CEX1, CEX2 routed to 3 Port Pins.
100: CEX0, CEX1, CEX2, CEX3 routed to 4 Port Pins.
101: CEX0, CEX1, CEX2, CEX3, CEX4 routed to 5 Port Pins.
110: RESERVED
111: RESERVED

Bit2: UARTEN: UART I/O Enable Bit
0: UART I/O unavailable at Port pins.
1: RX, TX routed to 2 Port Pins.

Bit1: SPI0OEN: SPI Bus I/O Enable Bit
0: SPI I/O unavailable at Port pins.
1: MISO, MOSI, SCK, and NSS routed to 4 Port Pins.

Bit0: SMB0OEN: SMBus Bus I/O Enable Bit
0: SMBus I/O unavailable at P0.0, P0.1.
1: SDA routed to P0.0, SCL routed to P0.1.

Figure 15.4. XBR1: Port I/O CrossBar Register 1

R/W	R/W	R/W	R/W	R/W	R/W	R/W	R/W	Reset Value
SYSCKE	T2EXE	T2E	INT1E	T1E	INT0E	T0E	CP1OEN	00000000
Bit7	Bit6	Bit5	Bit4	Bit3	Bit2	Bit1	Bit0	SFR Address: 0xE2

Bit7: SYSCKE: SYSCLK Output Enable Bit
0: SYSCLK unavailable at Port pin.
1: SYSCLK output routed to Port Pin.

Bit6: T2EXE: T2EX Enable Bit
0: T2EX unavailable at Port pin.
1: T2EX routed to Port Pin.

Bit5: T2E: T2 Enable Bit
0: T2 unavailable at Port pin.
1: T2 routed to Port Pin.

Bit4: INT1E: /INT1 Enable Bit
0: /INT1 unavailable at Port pin.
1: /INT1 routed to Port Pin.

Bit3: T1E: T1 Enable Bit
0: T1 unavailable at Port pin.
1: T1 routed to Port Pin.

Bit2: INT0E: /INT0 Enable Bit
0: /INT0 unavailable at Port pin.
1: /INT0 routed to Port Pin.

Bit1: T0E: T0 Enable Bit
0: T0 unavailable at Port pin.
1: T0 routed to Port Pin.

Bit0: CP1OEN: Comparator 1 Output Enable Bit
0: CP1 unavailable at Port pin.
1: CP1 routed to Port Pin.

Figure 15.5. XBR2: Port I/O CrossBar Register 2

R/W	R/W	R/W	R/W	R/W	R/W	R/W	R/W	Reset Value
WEAKPUD	XBARE	-	-	-	-	-	CNVSTE	00000000
Bit7	Bit6	Bit5	Bit4	Bit3	Bit2	Bit1	Bit0	SFR Address: 0xE3

Bit7: WEAKPUD: Port I/O Weak Pull-up Disable Bit
0: Weak Pull-ups Enabled (except for Ports whose I/O are configured as push-pull)
1: Weak Pull-ups Disabled

Bit6: XBARE: Crossbar Enable Bit
0: Crossbar Disabled
1: Crossbar Enabled

Bits5-1: UNUSED. Read = 00000b, Write = don't care.

Bit0: CNVSTE: ADC Convert Start Input Enable Bit
0: CNVSTR unavailable at Port pin.
1: CNVSTR routed to Port Pin.

Example Usage of XBR0, XBR1, XBR2:
When selected, the digital resources fill the Port I/O pins in order (top to bottom as shown in Table 15.1) starting with P0.0 through P0.7, and then P1.0 through P1.7, and finally P2.0 through P2.7. If the digital resources are not mapped to the Port I/O pins, they default to their matching internal Port Register bits.

Example1: If XBR0 = 0x11, XBR1 = 0x00, and XBR2 = 0x40:
P0.0=SDA, P0.1=SCL, P0.2=CEX0, P0.3=CEX1, P0.4 … P2.7 map to corresponding Port I/O.

Example2: If XBR0 = 0x80, XBR1 = 0x04, and XBR2 = 0x41:
P0.0=CP0, P0.1=/INT0, P0.2 = CNVSTR, P0.3 … P2.7 map to corresponding Port I/O.

15.3. General Purpose Port I/O

Each MCU has four byte-wide, bi-directional parallel ports that can be used general purpose I/O. Each port is accessed through a corresponding special function register (SFR) that is both byte addressable and bit addressable. When writing to a port, the value written to the SFR is latched to maintain the output data value at each pin. When reading, the logic levels of the port's input pins are returned regardless of the XBRn settings (i.e. even when the pin is assigned to another signal by the Crossbar, the Port Register can always still read its corresponding Port I/O pin). The exception to this is the execution of the *read-modify-write* instructions. The *read-modify-write* instructions when operating on a port SFR are the following: ANL, ORL, XRL, JBC, CPL, INC, DEC, DJNZ and MOV, CLR or SET, when the destination is an individual bit in a port SFR. For these instructions, the value of the port register (not the pin) is read, modified, and written back to the SFR.

15.4. Configuring Ports Which are not Pinned Out

P2 and P3 are not pinned out on the F001/06/11/16. P1, P2, and P3 are not pinned out on the F002/07/12/17. These port registers (and corresponding interrupts, where applicable) are still available for software use in these reduced pin count MCUs. Whether used or not in software, it is recommended not to let these port drivers go to high impedance state. This is prevented after reset by having the weak pull-ups enabled as described in the XBR2 register. It is recommended that each output driver for ports not pinned out should be configured as push-pull using the corresponding PRTnCF register. This will inhibit a high impedance state even if the weak pull-up is disabled.

Figure 15.6. P0: Port0 Register

R/W	R/W	R/W	R/W	R/W	R/W	R/W	R/W	Reset Value
P0.7	P0.6	P0.5	P0.4	P0.3	P0.2	P0.1	P0.0	11111111
Bit7	Bit6	Bit5	Bit4	Bit3	Bit2	Bit1	Bit0 (bit addressable)	SFR Address: 0x80

Bits7-0: P0.[7:0]
(Write – Output appears on I/O pins per XBR0, XBR1, and XBR2 Registers)
0: Logic Low Output.
1: Logic High Output (high-impedance if corresponding PRT0CF.n bit = 0)
(Read – Regardless of XBR0, XBR1, and XBR2 Register settings).
0: P0.n pin is logic low.
1: P0.n pin is logic high.

Figure 15.7. PRT0CF: Port0 Configuration Register

R/W	R/W	R/W	R/W	R/W	R/W	R/W	R/W	Reset Value
								00000000
Bit7	Bit6	Bit5	Bit4	Bit3	Bit2	Bit1	Bit0	SFR Address: 0xA4

Bits7-0: PRT0CF.[7:0]: Output Configuration Bits for P0.7-P0.0 (respectively)
0: Corresponding P0.n Output mode is Open-Drain.
1: Corresponding P0.n Output mode is Push-Pull.

(Note: When SDA, SCL, and RX appear on any of the P0 I/O, each are open-drain regardless of the value of PRT0CF).

Figure 15.8. P1: Port1 Register

R/W	R/W	R/W	R/W	R/W	R/W	R/W	R/W	Reset Value
P1.7	P1.6	P1.5	P1.4	P1.3	P1.2	P1.1	P1.0	11111111
Bit7	Bit6	Bit5	Bit4	Bit3	Bit2	Bit1	Bit0 (bit addressable)	SFR Address: 0x90

Bits7-0: P1.[7:0]
(Write – Output appears on I/O pins per XBR0, XBR1, and XBR2 registers)
0: Logic Low Output.
1: Logic High Output (high-impedance if corresponding PRT1CF.n bit = 0)
(Read – Regardless of XBR0, XBR1, and XBR2 Register settings).
0: P1.n pin is logic low.
1: P1.n pin is logic high.

Figure 15.9. PRT1CF: Port1 Configuration Register

R/W	R/W	R/W	R/W	R/W	R/W	R/W	R/W	Reset Value
								00000000
Bit7	Bit6	Bit5	Bit4	Bit3	Bit2	Bit1	Bit0	SFR Address: 0xA5

Bits7-0: PRT1CF.[7:0]: Output Configuration Bits for P1.7-P1.0 (respectively)
0: Corresponding P1.n Output mode is Open-Drain.
1: Corresponding P1.n Output mode is Push-Pull.

Figure 15.10. PRT1IF: Port1 Interrupt Flag Register

R/W	R/W	R/W	R/W	R/W	R/W	R/W	R/W	Reset Value
IE7	IE6	IE5	IE4	-	-	-	-	00000000
Bit7	Bit6	Bit5	Bit4	Bit3	Bit2	Bit1	Bit0	SFR Address: 0xAD

Bit7: IE7: External Interrupt 7 Pending Flag.
0: No falling edge detected on P1.7.
1: This flag is set by hardware when a falling edge on P1.7 is detected.
Bit6: IE6: External Interrupt 6 Pending Flag.
0: No falling edge detected on P1.6.
1: This flag is set by hardware when a falling edge on P1.6 is detected.
Bit5: IE5: External Interrupt 5 Pending Flag.
0: No falling edge detected on P1.5.
1: This flag is set by hardware when a falling edge on P1.5 is detected.
Bit4: IE4: External Interrupt 4 Pending Flag.
0: No falling edge detected on P1.4.
1: This flag is set by hardware when a falling edge on P1.4 is detected.
Bits3-0: UNUSED. Read = 0000b, Write = don't care.

Figure 15.11. P2: Port2 Register

R/W	R/W	R/W	R/W	R/W	R/W	R/W	R/W	Reset Value
P2.7	P2.6	P2.5	P2.4	P2.3	P2.2	P2.1	P2.0	11111111
Bit7	Bit6	Bit	Bit4	Bit3	Bit2	Bit1	Bit0 (bit addressable)	SFR Address: 0xA0

Bits7-0: P2.[7:0]
(Write – Output appears on I/O pins per XBR0, XBR1, and XBR2 registers)
0: Logic Low Output.
1: Logic High Output (high-impedance if corresponding PRT2CF.n bit = 0)
(Read – Regardless of XBR0, XBR1, and XBR2 Register settings).
0: P2.n is logic low.
1: P2.n is logic high.

Figure 15.12. PRT2CF: Port2 Configuration Register

R/W	R/W	R/W	R/W	R/W	R/W	R/W	R/W	Reset Value
								00000000
Bit7	Bit6	Bit5	Bit4	Bit3	Bit2	Bit1	Bit0	SFR Address: 0xA6

Bits7-0: PRT2CF.[7:0]: Output Configuration Bits for P2.7-P2.0 (respectively)
0: Corresponding P2.n Output mode is Open-Drain.
1: Corresponding P2.n Output mode is Push-Pull.

Figure 15.13. P3: Port3 Register

R/W	R/W	R/W	R/W	R/W	R/W	R/W	R/W	Reset Value
P3.7	P3.6	P3.5	P3.4	P3.3	P3.2	P3.1	P3.0	11111111
Bit7	Bit6	Bit5	Bit4	Bit3	Bit2	Bit1	Bit0 (bit addressable)	SFR Address: 0xB0

Bits7-0: P3.[7:0]
(Write)
0: Logic Low Output.
1: Logic High Output (high-impedance if corresponding PRT3CF.n bit = 0)
(Read)
0: P3.n is logic low.
1: P3.n is logic high.

Figure 15.14. PRT3CF: Port3 Configuration Register

R/W	R/W	R/W	R/W	R/W	R/W	R/W	R/W	Reset Value
								00000000
Bit7	Bit6	Bit5	Bit4	Bit3	Bit2	Bit1	Bit0	SFR Address: 0xA7

Bits7-0: PRT3CF.[7:0]: Output Configuration Bits for P3.7-P3.0 (respectively)
0: Corresponding P3.n Output mode is Open-Drain.
1: Corresponding P3.n Output mode is Push-Pull.

Table 15.2. Port I/O DC Electrical Characteristics

VDD = 2.7 to 3.6V, -40°C to +85°C unless otherwise specified.

PARAMETER	CONDITIONS	MIN	TYP	MAX	UNITS
Output High Voltage	I_{OH} = -10uA, Port I/O push-pull I_{OH} = -3mA, Port I/O push-pull I_{OH} = -10mA, Port I/O push-pull	VDD – 0.1 VDD – 0.7	 VDD – 0.8		V
Output Low Voltage	I_{OL} = 10uA I_{OL} = 8.5mA I_{OL} = 25mA		 1.0	0.1 0.6	V
Input High Voltage		0.7 x VDD			V
Input Low Voltage				0.3 x VDD	V
Input Leakage Current	DGND < Port Pin < VDD, Pin Tri-state Weak Pull-up Off Weak Pull-up On		 30	 ±1	µA
Capacitive Loading			5		pF

16. SMBus / I2C Bus

The SMBus serial I/O interface is compliant with the System Management Bus Specification, version 1.1. It is a two-wire, bi-directional serial bus, which is also compatible with the I^2C serial bus. Reads and writes to the interface by the system controller are byte oriented with the SMBus interface autonomously controlling the serial transfer of the data. Data can be transferred at up to $1/8^{th}$ of the system clock if desired (this can be faster than allowed by the SMBus specification, depending on the system clock used). A method of extending the clock-low duration is used to accommodate devices with different speed capabilities on the same bus.

Two types of data transfers are possible: data transfers from a master transmitter to an addressed slave receiver, and data transfers from an addressed slave transmitter to a master receiver. The master device initiates both types of data transfers and provides the serial clock pulses. The SMBus interface may operate as a master or a slave. Multiple master devices on the same bus are also supported. If two or more masters attempt to initiate a data transfer simultaneously, an arbitration scheme is employed with a single master always winning the arbitration.

Figure 16.1. SMBus Block Diagram

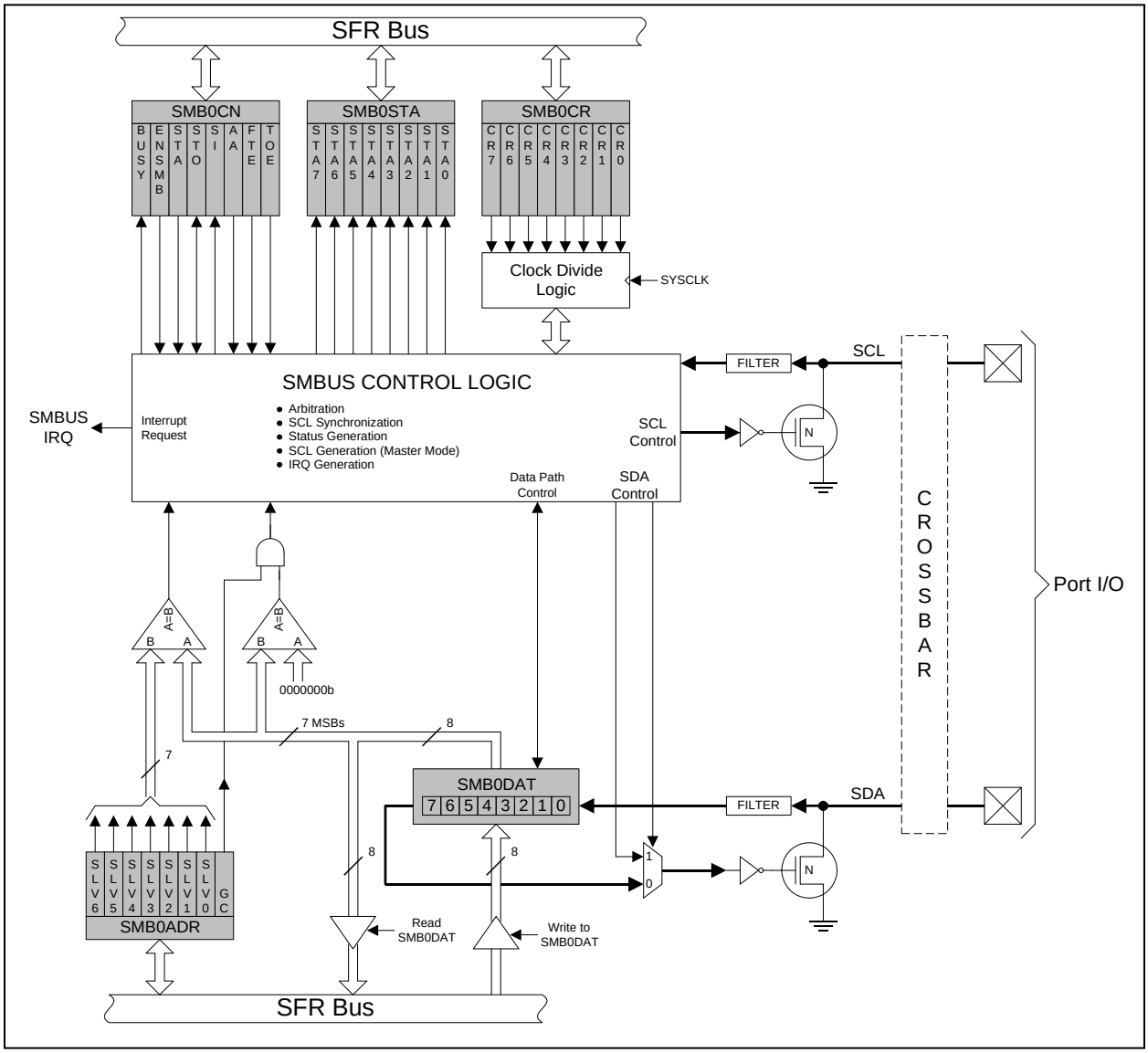

Figure 16.2 shows a typical SMBus configuration. The SMBus interface will work at any voltage between 3.0V and 5.0V and different devices on the bus may operate at different voltage levels. The SCL (serial clock) and SDA (serial data) lines are bi-directional. They must be connected to a positive power supply voltage through a pull-up resistor or similar circuit. When the bus is free, both lines are pulled high. Every device connected to the bus must have an open-drain or open-collector output for both the SCL and SDA lines. The maximum number of devices on the bus is limited only by the requirement that the rise and fall times on the bus will not exceed 300ns and 1000ns, respectively.

Figure 16.2. Typical SMBus Configuration

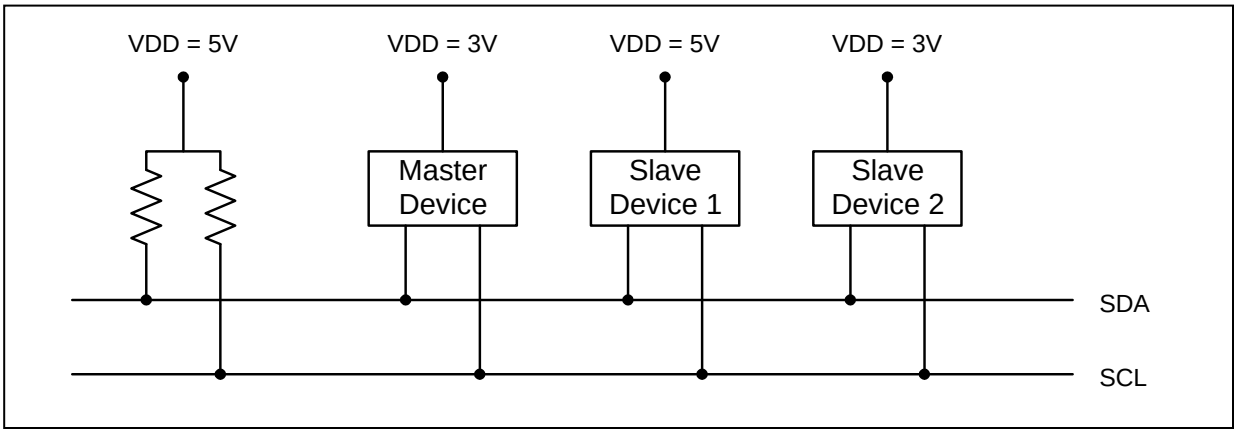

16.1. Supporting Documents

It is assumed the reader is familiar with or has access to the following supporting documents:

1. *The I²C-bus and how to use it (including specifications)*, Philips Semiconductor.
2. *The I²C-Bus Specification -- Version 2.0*, Philips Semiconductor.
3. *System Management Bus Specification -- Version 1.1*, SBS Implementers Forum.

16.2. Operation

A typical SMBus transaction consists of a START condition, followed by an address byte, one or more bytes of data, and a STOP condition. The address byte and each of the data bytes are followed by an ACKNOWLEDGE bit from the receiver. The address byte consists of a 7-bit address plus a direction bit. The direction bit (R/W) occupies the least-significant bit position of the address. The direction bit is set to logic 1 to indicate a "READ" operation and cleared to logic 0 to indicate a "WRITE" operation. A general call address (0x00 +R/W) is recognized by all slave devices allowing a master to address multiple slave devices simultaneously.

All transactions are initiated by the master, with one or more addressed slave devices as the target. The master generates the START condition and then transmits the address and direction bit. If the transaction is a WRITE operation from the master to the slave, the master transmits the data a byte at a time waiting for an ACKNOWLEDGE from the slave at the end of each byte. If it is a READ operation, the slave transmits the data waiting for an ACKNOWLEDGE from the master at the end of each byte. At the end of the data transfer, the master generates a STOP condition to terminate the transaction and free the bus. Figure 16.3 illustrates a typical SMBus transaction.

Figure 16.3. SMBus Transaction

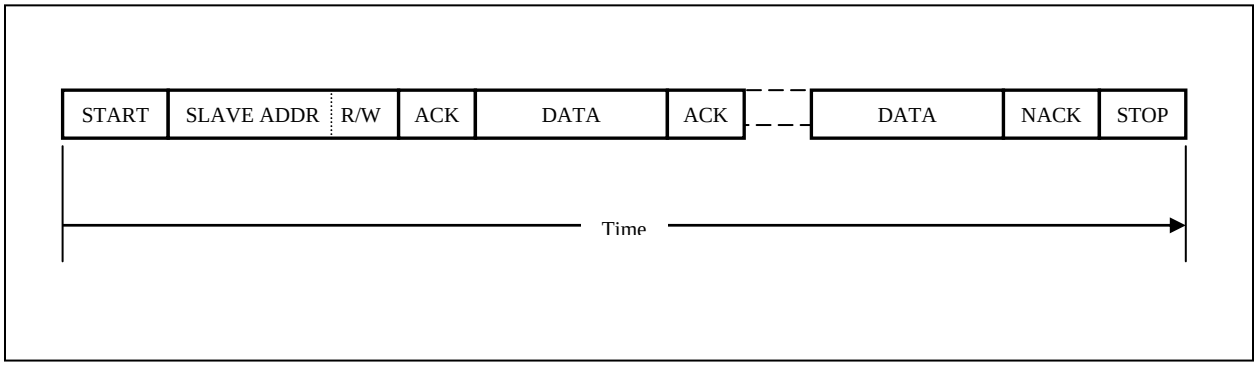

The SMBus interface may be configured to operate as either a master or a slave. At any particular time, it will be operating in one of the following four modes:

16.2.1. Master Transmitter Mode

Serial data is transmitted on SDA while the serial clock is output on SCL. The first byte transmitted contains the address of the target slave device and the data direction bit. In this case the data direction bit (R/W) will be logic 0 to indicate a "WRITE" operation. The master then transmits one or more bytes of serial data. After each byte is transmitted, an acknowledge bit is generated by the slave. To indicate the beginning and the end of the serial transfer, the master device outputs START and STOP conditions.

16.2.2. Master Receiver Mode

Serial data is received on SDA while the serial clock is output on SCL. The first byte is transmitted by the master and contains the address of the target slave and the data direction bit. In this case the data direction bit (R/W) will be logic 1 to indicate a "READ" operation. Serial data is then received from the slave on SDA while the master outputs the serial clock. The slave transmits one or more bytes of serial data. After each byte is received, an acknowledge bit is transmitted by the master. The master outputs START and STOP conditions to indicate the beginning and end of the serial transfer.

16.2.3. Slave Transmitter Mode

Serial data is transmitted on SDA while the serial clock is received on SCL. First, a byte is received that contains an address and data direction bit. In this case the data direction bit (R/W) will be logic 1 to indicate a "READ" operation. If the received address matches the slave's assigned address (or a general call address is received) one or more bytes of serial data are transmitted to the master. After each byte is received, an acknowledge bit is transmitted by the master. The master outputs START and STOP conditions to indicate the beginning and end of the serial transfer.

16.2.4. Slave Receiver Mode

Serial data is received on SDA while the serial clock is received on SCL. First, a byte is received that contains an address and data direction bit. In this case the data direction bit (R/W) will be logic 0 to indicate a "WRITE" operation. If the received address matches the slave's assigned address (or a general call address is received) one or more bytes of serial data are received from the master. After each byte is received, an acknowledge bit is transmitted by the slave. The master outputs START and STOP conditions to indicate the beginning and end of the serial transfer.

16.3. Arbitration

A master may start a transfer only if the bus is free. The bus is free after a STOP condition or after the SCL and SDA lines remains high for a specified time. Two or more master devices may attempt to generate a START condition at the same time. Since the devices that generated the START condition may not be aware that other masters are contending for the bus, an arbitration scheme is employed. The master devices continue to transmit until one of the masters transmits a HIGH level, while the other(s) master transmits a LOW level on SDA. The first master(s) transmitting the HIGH level on SDA looses the arbitration and is required to give up the bus.

16.4. Clock Low Extension

SMBus provides a clock synchronization mechanism, similar to I2C, which allows devices with different speed capabilities to coexist on the bus. A clock-low extension is used during a transfer in order to allow slower slave devices to communicate with faster masters. The slave can hold the SCL line LOW to extend the clock low period, effectively decreasing the serial clock frequency.

16.5. Timeouts

16.5.1. SCL Low Timeout

If the SCL line is held low by a slave device on the bus, no further communication is possible. Furthermore, the master cannot force the SCL line high to correct the error condition. To solve this problem, the SMBus protocol specifies that devices participating in a transfer must detect any clock cycle held low longer than 25ms as a "timeout" condition. Devices that have detected the timeout condition must reset the communication no later than 10ms after detecting the timeout condition.

One of the MCU's general-purpose timers, operating in 16-bit auto-reload mode, can be used to monitor the SCL line for this timeout condition. Timer 3 is specifically designed for this purpose. (Refer to the Timer 3 Section 19.3. for detailed information on Timer 3 operation.)

16.5.2. SCL High (SMBus Free) Timeout

The SMBus specification stipulates that if a device holds the SCL and SDA lines high for more that 50usec, the bus is designated as free. The SMB0CR register is used to detect this condition when the FTE bit in SMB0CN is set.

16.6. SMBus Special Function Registers

The SMBus serial interface is accessed and controlled through five SFRs: SMB0CN Control Register, SMB0CR Clock Rate Register, SMB0ADR Address Register, SMB0DAT Data Register and SMB0STA Status Register. The system device may have one or more SMBus serial interfaces implemented. The five special function registers related to the operation of the SMBus interface are described in the following section.

16.6.1. Control Register

The SMBus Control register SMB0CN is used to configure and control the SMBus interface. All of the bits in the register can be read or written by software. Two of the control bits are also affected by the SMBus hardware. The Serial Interrupt flag (SI, SMB0CN.3) is set to logic 1 by the hardware when a valid serial interrupt condition occurs. It can only be cleared by software. The Stop flag (STO, SMB0CN.4) is cleared to logic 0 by hardware when a STOP condition is present on the bus.

Setting the ENSMB flag to logic 1 enables the SMBus interface. Clearing the ENSMB flag to logic 0 disables the SMBus interface and removes it from the bus. Momentarily clearing the ENSMB flag and then resetting it to logic 1 will reset a SMBus communication. However, ENSMB should not be used to temporarily remove a device from the bus since the bus state information will be lost. Instead, the Assert Acknowledge (AA) flag should be used to temporarily remove the device from the bus (see description of AA flag below).

Setting the Start flag (STA, SMB0CN.5) to logic 1 will put the SMBus in a master mode. If the bus is free, the SMBus hardware will generate a START condition. If the bus is not free, the SMBus hardware waits for a STOP condition to free the bus and then generates a START condition after a 5µs delay per the SMB0CR value. (In accordance with the SMBus protocol, the SMBus interface also considers the bus free if the bus is idle for 50µs and no STOP condition was recognized.) If STA is set to logic 1 while the SMBus is in master mode and one or more bytes have been transferred, a repeated START condition will be generated. To ensure proper operation, the STO flag should be explicitly cleared before setting STA to a logic 1.

When the Stop flag (STO, SMB0CN.4) is set to logic 1 while the SMBus interface is in master mode, the hardware generates a STOP condition on the SMBus. In a slave mode, the STO flag may be used to recover from an error condition. In this case, a STOP condition is not generated on the SMBus, but the SMBus hardware behaves as if a STOP condition has been received and enters the “not addressed” slave receiver mode. The SMBus hardware automatically clears the STO flag to logic 0 when a STOP condition is detected on the bus.

The Serial Interrupt flag (SI, SMB0CN.3) is set to logic 1 by hardware when the SMBus interface enters one of 27 possible states. If interrupts are enabled for the SMBus interface, an interrupt request is generated when the SI flag is set. The SI flag must be cleared by software. While SI is set to logic 1, the clock-low period of the serial clock will be stretched and the serial transfer is suspended.

The Assert Acknowledge flag (AA, SMB0CN.2) is used to set the level of the SDA line during the acknowledge clock cycle on the SCL line. Setting the AA flag to logic 1 will cause an ACKNOWLEDGE (low level on SDA) to be sent during the acknowledge cycle if the device has been addressed. Setting the AA flag to logic 0 will cause a NOT ACKNOWLEDGE (high level on SDA) to be sent during acknowledge cycle. After the transmission of a byte in slave mode, the slave can be temporarily removed from the bus by clearing the AA flag. The slave’s own address and general call address will be ignored. To resume operation on the bus, the AA flag must be reset to logic 1 to allow the slave’s address to be recognized.

Setting the SMBus Free Timer Enable bit (FTE, SMB0CN.1) to logic 1 enables the SMBus Free Timeout feature. If SCL and SDA remain high for the SMBus Free Timeout given in the SMBus Clock Rate Register (Figure 16.5), the bus will be considered free and a Start will be generated if pending. The bus free period should be greater than 50µs.

Setting the SMBus timeout enable bit (TOE, SMB0CN.0) to logic 1 enables Timer 3 to count up when the SCL line is low and Timer 3 is enabled. If Timer 3 overflows, a Timer 3 interrupt will be generated, which will alert the CPU that a SMBus SCL low timeout has occurred.

Figure 16.4. SMB0CN: SMBus Control Register

R	R/W	R/W	R/W	R/W	R/W	R/W	R/W	Reset Value
BUSY	ENSMB	STA	STO	SI	AA	FTE	TOE	00000000
Bit7	Bit6	Bit5	Bit4	Bit3	Bit2	Bit1	Bit0 (bit addressable)	SFR Address: 0xC0

Bit7: BUSY: Busy Status Flag.
0: SMBus is free
1: SMBus is busy

Bit6: ENSMB: SMBus Enable.
This bit enables/disables the SMBus serial interface.
0: SMBus disabled.
1: SMBus enabled.

Bit5: STA: SMBus Start Flag.
0: No START condition is transmitted.
1: When operating as a master, a START condition is transmitted if the bus is free. (If the bus is not free, the START is transmitted after a STOP is received.) If STA is set after one or more bytes have been transmitted or received and before a STOP is received, a repeated START condition is transmitted. STO should be explicitly cleared before setting STA to logic 1.

Bit4: STO: SMBus Stop Flag.
0: No STOP condition is transmitted.
1: Setting STO to logic 1 causes a STOP condition to be transmitted. When a STOP condition is received, hardware clears STO to logic 0. If both STA and STO are set, a STOP condition is transmitted followed by a START condition. In slave mode, setting the STO flag causes SMBus to behave as if a STOP condition was received.

Bit3: SI: SMBus Serial Interrupt Flag.
This bit is set by hardware when one of 27 possible SMBus states is entered. (Status code 0xF8 does not cause SI to be set.) When the SI interrupt is enabled, setting this bit causes the CPU to vector to the SMBus interrupt service routine. This bit is not automatically cleared by hardware and must be cleared by software.

Bit2: AA: SMBus Assert Acknowledge Flag.
This bit defines the type of acknowledge returned during the acknowledge cycle on the SCL line.
0: A “not acknowledge” (high level on SDA) is returned during the acknowledge cycle.
1: An “acknowledge” (low level on SDA) is returned during the acknowledge cycle.

Bit1: FTE: SMBus Free Timer Enable Bit
0: No timeout when SCL is high
1: Timeout when SCL high time exceeds limit specified by the SMB0CR value.

Bit0: TOE: SMBus Timeout Enable Bit
0: No timeout when SCL is low.
1: Timeout when SCL low time exceeds limit specified by Timer 3, if enabled.

16.6.2. Clock Rate Register

Figure 16.5. SMB0CR: SMBus Clock Rate Register

R/W	R/W	R/W	R/W	R/W	R/W	R/W	R/W	Reset Value
								00000000
Bit7	Bit6	Bit5	Bit4	Bit3	Bit2	Bit1	Bit0	SFR Address: 0xCF

Bits7-0: SMB0CR.[7:0]: SMBus Clock Rate Preset

The SMB0CR Clock Rate register controls the frequency of the serial clock SCL in master mode. The 8-bit word stored in the SMB0CR Register preloads a dedicated 8-bit timer. The timer counts up, and when it rolls over to 0x00, the SCL logic state toggles.

The SMB0CR setting should be bounded by the following equation, where *SMB0CR* is the unsigned 8-bit value in register SMB0CR, and *SYSCLK* is the system clock frequency in Hz:

$$SMB0CR < ((288 - 0.85 * SYSCLK) / 1.125E6)$$

The resulting SCL signal high and low times are given by the following equations:

$$T_{LOW} = (256 - SMB0CR) / SYSCLK$$

$$T_{HIGH} \cong (258 - SMB0CR) / SYSCLK + 625\ ns$$

Using the same value of SMB0CR from above, the Bus Free Timeout period is given in the following equation:

$$T_{BFT} \cong 10 * [(256 - SMB0CR) + 1] / SYSCLK$$

16.6.3. Data Register

The SMBus Data register SMB0DAT holds a byte of serial data to be transmitted or one that has just been received. Data remains stable in the register as long as SI is set to logic 1. Software can safely read or write to the data register when the SI flag is set. Software should not attempt to access the SMB0DAT register when the SMBus is enabled and the SI flag is cleared to logic 0 since the hardware may be in the process of shifting a byte of data in or out of the register.

Data in SMB0DAT is always shifted out MSB first. After a byte has been received, the first bit of received data is located at the MSB of SMB0DAT. While data is being shifted out, data on the bus is simultaneously being shifted in. Therefore, SMB0DAT always contains the last data byte present on the bus. Thus, in the event of lost arbitration, the transition from master transmitter to slave receiver is made with the correct data in SMB0DAT.

Figure 16.6. SMB0DAT: SMBus Data Register

R/W	R/W	R/W	R/W	R/W	R/W	R/W	R/W	Reset Value
								00000000
Bit7	Bit6	Bit5	Bit4	Bit3	Bit2	Bit1	Bit0	SFR Address: 0xC2

Bits7-0: SMB0DAT: SMBus Data.
The SMB0DAT register contains a byte of data to be transmitted on the SMBus serial interface or a byte that has just been received on the SMBus serial interface. The CPU can read from or write to this register whenever the SI serial interrupt flag (SMB0CN.3) is set to logic one. The serial data in the register remains stable as long as the SI flag is set. When the SI flag is not set, the system may be in the process of shifting data in/out and the CPU should not attempt to access this register.

16.6.4. Address Register

The SMB0ADR Address register holds the slave address for the SMBus interface. In slave mode, the seven most-significant bits hold the 7-bit slave address. The least significant bit, bit 0, is used to enable the recognition of the general call address (0x00). If bit 0 is set to logic 1, the general call address will be recognized. Otherwise, the general call address is ignored. The contents of this register are ignored when the SMBus hardware is operating in master mode.

Figure 16.7. SMB0ADR: SMBus Address Register

R/W	R/W	R/W	R/W	R/W	R/W	R/W	R/W	Reset Value
SLV6	SLV5	SLV4	SLV3	SLV2	SLV1	SLV0	GC	00000000
Bit7	Bit6	Bit5	Bit4	Bit3	Bit2	Bit1	Bit0	SFR Address: 0xC3

Bits7-1: SLV6-SLV0: SMBus Slave Address.
These bits are loaded with the 7-bit slave address to which the SMBus will respond when operating as a slave transmitter or slave receiver. SLV6 is the most significant bit of the address and corresponds to the first bit of the address byte received on the SMBus.

Bit0: GC: General Call Address Enable.
This bit is used to enable general call address (0x00) recognition.
0: General call address is ignored.
1: General call address is recognized.

16.6.5. Status Register

The SMB0STA Status register holds an 8-bit status code indicating the current state of the SMBus. There are 28 possible SMBus states, each with a corresponding unique status code. The five most significant bits of the status code vary while the three least-significant bits of a valid status code are fixed at zero when SI = 1. Therefore, all possible status codes are multiples of eight. This facilitates the use of status codes in software as an index used to branch to appropriate service routines (allowing 8 bytes of code to service the state or jump to a more extensive service routine).

For the purposes of user software, the contents of the SMB0STA register is only defined when the SI flag is logic 1. Software should never write to the SMB0STA register. Doing so will yield indeterminate results. The 28 SMBus states, along with their corresponding status codes, are given in Table 16.1.

Figure 16.8. SMB0STA: SMBus Status Register

R/W	R/W	R/W	R/W	R/W	R/W	R/W	R/W	Reset Value
STA7	STA6	STA5	STA4	STA3	STA2	STA1	STA0	11111000
Bit7	Bit6	Bit5	Bit4	Bit3	Bit2	Bit1	Bit0	SFR Address: 0xC1

Bits7-3: STA7-STA3: SMBus Status Code.
These bits contain the SMBus Status Code. There are 28 possible status codes. Each status code corresponds to a single SMBus state. A valid status code is present in SMB0STA when the SI flag (SMB0CN.3) is set. The content of SMB0STA is not defined when the SI flag is logic 0. Writing to the SMB0STA register at any time will yield indeterminate results.

Bits2-0: STA2-STA0: The three least significant bits of SMB0STA are always read as logic 0 when the SI flag is logic 1.

Table 16.1. SMBus Status Codes

Status Code (SMB0STA)	Mode	**SMBus State**
0x00	All	Bus Error (i.e. illegal START, illegal STOP, …)
0x08	Master Transmitter/Receiver	START condition transmitted.
0x10	Master Transmitter/Receiver	Repeated START condition transmitted.
0x18	Master Transmitter	Slave address + W transmitted. ACK received.
0x20	Master Transmitter	Slave address + W transmitted. NACK received.
0x28	Master Transmitter	Data byte transmitted. ACK received.
0x30	Master Transmitter	Data byte transmitted. NACK received.
0x38	Master Transmitter	Arbitration lost
0x40	Master Receiver	Slave address + R transmitted. ACK received.
0x48	Master Receiver	Slave address + R transmitted. NACK received
0x50	Master Receiver	Data byte received. ACK transmitted.
0x58	Master Receiver	Data byte received. NACK transmitted.
0x60	Slave Receiver	SMB0's own slave address + W received. ACK transmitted.
0x68	Slave Receiver	Arbitration lost in transmitting slave address + R/W as master. Own slave address + W received. ACK transmitted.
0x70	Slave Receiver	General call address (0x00) received. ACK returned.
0x78	Slave Receiver	Arbitration lost in transmitting slave address + R/W as master. General call address received. ACK transmitted.
0x80	Slave Receiver	SMB0's own slave address + W received. Data byte received. ACK transmitted.
0x88	Slave Receiver	SMB0's own slave address + W received. Data byte received. NACK transmitted.
0x90	Slave Receiver	General call address (0x00) received. Data byte received. ACK transmitted.
0x98	Slave Receiver	General call address (0x00) received. Data byte received. NACK transmitted.
0xA0	Slave Receiver	A STOP or repeated START received while addressed as a slave.
0xA8	Slave Transmitter	SMB0's own slave address + R received. ACK transmitted.
0xB0	Slave Transmitter	Arbitration lost in transmitting slave address + R/W as master. Own slave address + R received. ACK transmitted.
0xB8	Slave Transmitter	Data byte transmitted. ACK received.
0xC0	Slave Transmitter	Data byte transmitted. NACK received.
0xC8	Slave Transmitter	Last data byte transmitted (AA=0). ACK received.
0xD0	Slave Transmitter/Receiver	SCL Clock High Timer per SMB0CR timed out (FTE=1)
0xF8	All	Idle

17. SERIAL PERIPHERAL INTERFACE BUS

The Serial Peripheral Interface (SPI) provides access to a four-wire, full-duplex, serial bus. SPI supports the connection of multiple slave devices to a master device on the same bus. A separate slave-select signal (NSS) is used to select a slave device and enable a data transfer between the master and the selected slave. Multiple masters on the same bus are also supported. Collision detection is provided when two or more masters attempt a data transfer at the same time. The SPI can operate as either a master or a slave. When the SPI is configured as a master, the maximum data transfer rate (bits/sec) is one-half the system clock frequency.

When the SPI is configured as a slave, the maximum data transfer rate (bits/sec) for full-duplex operation is 1/10 the system clock frequency, provided that the master issues SCK, NSS, and the serial input data synchronously with the system clock. If the master issues SCK, NSS, and the serial input data asynchronously, the maximum data transfer rate (bits/sec) must be less that 1/10 the system clock frequency. In the special case where the master only wants to transmit data to the slave and does not need to receive data from the slave (i.e. half-duplex operation), the SPI slave can receive data at a maximum data transfer rate (bits/sec) of ¼ the system clock frequency. This is provided that the master issues SCK, NSS, and the serial input data synchronously with the system clock.

Figure 17.1. SPI Block Diagram

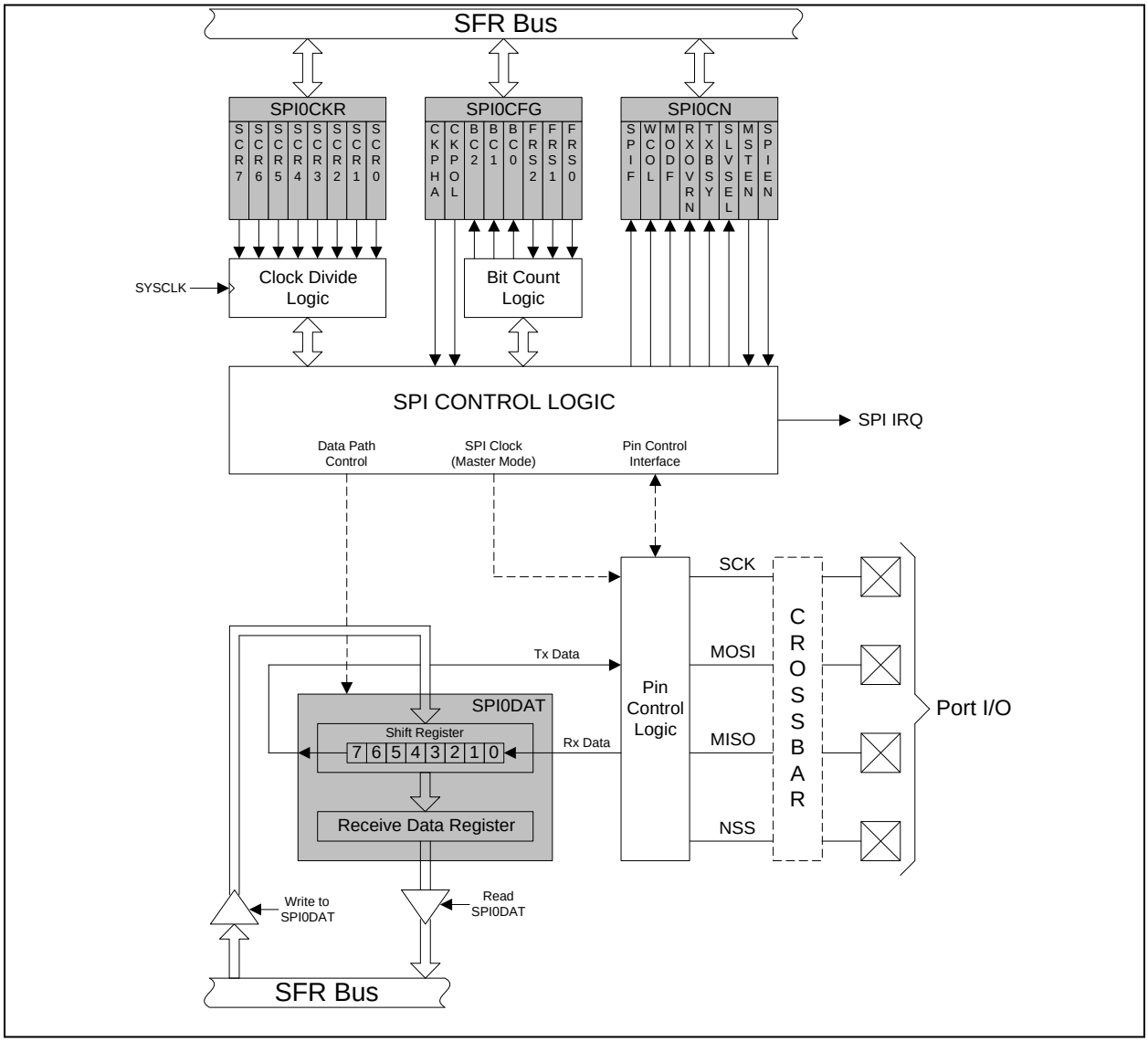

Figure 17.2. Typical SPI Interconnection

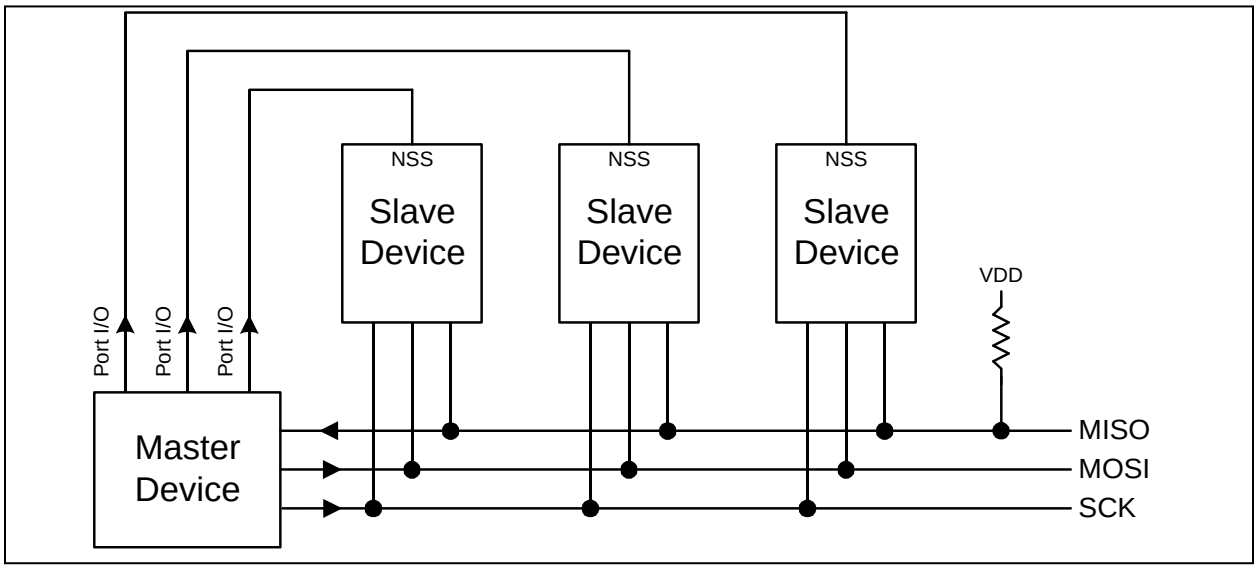

17.1. Signal Descriptions

The four signals used by the SPI (MOSI, MISO, SCK, NSS) are described below.

17.1.1. Master Out, Slave In

The master-out, slave-in (MOSI) signal is an output from a master device and an input to slave devices. It is used to serially transfer data from the master to the slave. Data is transferred most-significant bit first.

17.1.2. Master In, Slave Out

The master-in, slave-out (MISO) signal is an output from a slave device and an input to the master device. It is used to serially transfer data from the slave to the master. Data is transferred most-significant bit first. A SPI slave places the MISO pin in a high-impedance state when the slave is not selected.

17.1.3. Serial Clock

The serial clock (SCK) signal is an output from the master device and an input to slave devices. It is used to synchronize the transfer of data between the master and slave on the MOSI and MISO lines.

17.1.4. Slave Select

The slave select (NSS) signal is an input used to select the SPI module when in slave mode by a master, or to disable the SPI module when in master mode. When in slave mode, it is pulled low to initiate a data transfer and remains low for the duration of the transfer.

17.2. Operation

Only a SPI master device can initiate a data transfer. The SPI is placed in master mode by setting the Master Enable flag (MSTEN, SPI0CN.1). Writing a byte of data to the SPI data register (SPI0DAT) when in Master Mode starts a data transfer. The SPI master immediately shifts out the data serially on the MOSI line while providing the serial clock on SCK. The SPIF (SPI0CN.7) flag is set to logic 1 at the end of the transfer. If interrupts are enabled, an interrupt request is generated when the SPIF flag is set. The SPI master can be configured to shift in/out from one to eight bits in a transfer operation in order to accommodate slave devices with different word lengths. The SPIFRS bits in the SPI Configuration Register (SPI0CFG.[2:0]) are used to select the number of bits to shift in/out in a transfer operation.

While the SPI master transfers data to a slave on the MOSI line, the addressed SPI slave device simultaneously transfers the contents of its shift register to the SPI master on the MISO line in a full-duplex operation. The data byte received from the slave replaces the data in the master's data register. Therefore, the SPIF flag serves as both a transmit-complete and receive-data-ready flag. The data transfer in both directions is synchronized with the serial clock generated by the master. Figure 17.3 illustrates the full-duplex operation of an SPI master and an addressed slave.

Figure 17.3. Full Duplex Operation

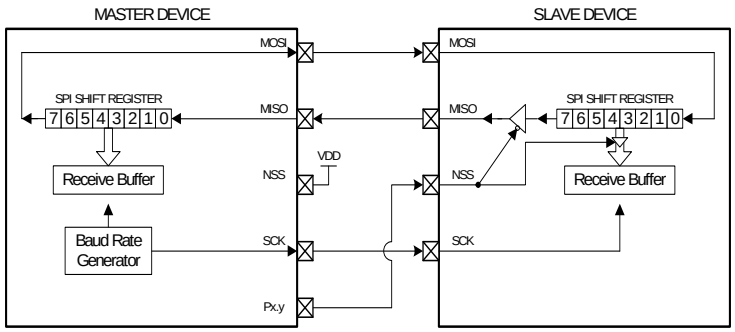

The SPI data register is double buffered on reads, but not on a write. If a write to SPI0DAT is attempted during a data transfer, the WCOL flag (SPI0CN.6) will be set to logic 1 and the write is ignored. The current data transfer will continue uninterrupted. A read of the SPI data register by the system controller actually reads the receive buffer. If the receive buffer still holds unread data from a previous transfer when the last bit of the current transfer is shifted into the SPI shift register, a receive overrun occurs and the RXOVRN flag (SPI0CN.4) is set to logic 1. The new data is not transferred to the receive buffer, allowing the previously received data byte to be read. The data byte causing the overrun is lost.

When the SPI is enabled and not configured as a master, it will operate as an SPI slave. Another SPI device acting as a master will initiate a transfer by driving the NSS signal low. The master then shifts data out of the shift register on the MOSI pin using the its serial clock. The SPIF flag is set to logic 1 at the end of a data transfer (when the NSS signal goes high). The slave can load its shift register for the next data transfer by writing to the SPI data register. The slave must make the write to the data register at least one SPI serial clock cycle before the master starts the next transmission. Otherwise, the byte of data already in the slave's shift register will be transferred.

Multiple masters may reside on the same bus. A Mode Fault flag (MODF, SPI0CN.5) is set to logic 1 when the SPI is configured as a master (MSTEN = 1) and its slave select signal NSS is pulled low. When the Mode Fault flag is set, the MSTEN and SPIEN bits of the SPI control register are cleared by hardware, thereby placing the SPI module

in an “off-line” state. In a multiple-master environment, the system controller should check the state of the SLVSEL flag (SPI0CN.2) to ensure the bus is free before setting the MSTEN bit and initiating a data transfer.

17.3. Serial Clock Timing

As shown in Figure 17.4, four combinations of serial clock phase and polarity can be selected using the clock control bits in the SPI Configuration Register (SPI0CFG). The CKPHA bit (SPI0CFG.7) selects one of two clock phases (edge used to latch the data). The CKPOL bit (SPI0CFG.6) selects between an active-high or active-low clock. Both master and slave devices must be configured to use the same clock phase and polarity. Note: the SPI should be disabled (by clearing the SPIEN bit, SPI0CN.0) while changing the clock phase and polarity.

The SPI Clock Rate Register (SPI0CKR) as shown in Figure 17.7 controls the master mode serial clock frequency. This register is ignored when operating in slave mode.

Figure 17.4. Data/Clock Timing Diagram

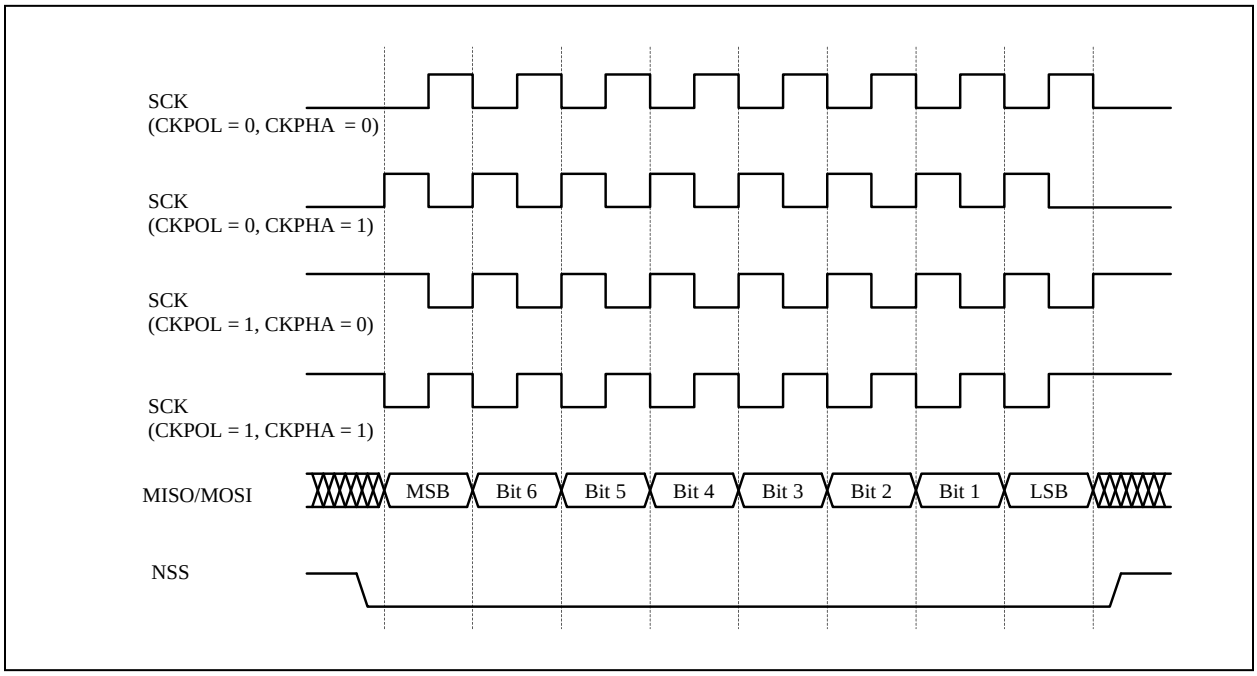

17.4. SPI Special Function Registers

The SPI is accessed and controlled through four special function registers in the system controller: SPI0CN Control Register, SPI0DAT Data Register, SPI0CFG Configuration Register, and SPI0CKR Clock Rate Register. The four special function registers related to the operation of the SPI Bus are described in the following section.

Figure 17.5. SPI0CFG: SPI Configuration Register

R/W	R/W	R	R	R	R/W	R/W	R/W	Reset Value
CKPHA	CKPOL	BC2	BC1	BC0	SPIFRS2	SPIFRS1	SPIFRS0	00000111
Bit7	Bit6	Bit5	Bit4	Bit3	Bit2	Bit1	Bit0	SFR Address: 0x9A

Bit7: CKPHA: SPI Clock Phase.
This bit controls the SPI clock phase.
0: Data sampled on first edge of SCK period.
1: Data sampled on second edge of SCK period.

Bit6: CKPOL: SPI Clock Polarity.
This bit controls the SPI clock polarity.
0: SCK line low in idle state.
1: SCK line high in idle state.

Bits5-3: BC2-BC0: SPI Bit Count.
Indicates which of the up to 8 bits of the SPI word have been transmitted.

BC2-BC0			Bit Transmitted
0	0	0	Bit 0 (LSB)
0	0	1	Bit 1
0	1	0	Bit 2
0	1	1	Bit 3
1	0	0	Bit 4
1	0	1	Bit 5
1	1	0	Bit 6
1	1	1	Bit 7 (MSB)

Bits2-0: SPIFRS2-SPIFRS0: SPI Frame Size.
These three bits determine the number of bits to shift in/out of the SPI shift register during a data transfer in master mode. They are ignored in slave mode.

SPIFRS			Bits Shifted
0	0	0	1
0	0	1	2
0	1	0	3
0	1	1	4
1	0	0	5
1	0	1	6
1	1	0	7
1	1	1	8

.

Figure 17.6. SPI0CN: SPI Control Register

R/W	R/W	R/W	R/W	R	R	R/W	R/W	Reset Value
SPIF	WCOL	MODF	RXOVRN	TXBSY	SLVSEL	MSTEN	SPIEN	00000000
Bit7	Bit6	Bit5	Bit4	Bit3	Bit2	Bit1	Bit0 (bit addressable)	SFR Address: 0xF8

Bit7: SPIF: SPI Interrupt Flag.
This bit is set to logic 1 by hardware at the end of a data transfer. If interrupts are enabled, setting this bit causes the CPU to vector to the SPI0 interrupt service routine. This bit is not automatically cleared by hardware. It must be cleared by software.

Bit6: WCOL: Write Collision Flag.
This bit is set to logic 1 by hardware (and generates a SPI interrupt) to indicate a write to the SPI data register was attempted while a data transfer was in progress. It is cleared by software.

Bit5: MODF: Mode Fault Flag.
This bit is set to logic 1 by hardware (and generates a SPI interrupt) when a master mode collision is detected (NSS is low and MSTEN = 1). This bit is not automatically cleared by hardware. It must be cleared by software.

Bit4: RXOVRN: Receive Overrun Flag.
This bit is set to logic 1 by hardware (and generates a SPI interrupt) when the receive buffer still holds unread data from a previous transfer and the last bit of the current transfer is shifted into the SPI shift register. This bit is not automatically cleared by hardware. It must be cleared by software.

Bit3: TXBSY: Transmit Busy Flag.
This bit is set to logic 1 by hardware while a master mode transfer is in progress. It is cleared by hardware at the end of the transfer.

Bit2: SLVSEL: Slave Selected Flag.
This bit is set to logic 1 whenever the NSS pin is low indicating it is enabled as a slave. It is cleared to logic 0 when NSS is high (slave disabled).

Bit1: MSTEN: Master Mode Enable.
0: Disable master mode. Operate in slave mode.
1: Enable master mode. Operate as a master.

Bit0: SPIEN: SPI Enable.
This bit enables/disables the SPI.
0: SPI disabled.
1: SPI enabled.

Figure 17.7. SPI0CKR: SPI Clock Rate Register

R/W	R/W	R/W	R/W	R/W	R/W	R/W	R/W	Reset Value
SCR7	SCR6	SCR5	SCR4	SCR3	SCR2	SCR1	SCR0	00000000
Bit7	Bit6	Bit5	Bit4	Bit3	Bit2	Bit1	Bit0	SFR Address: 0x9D

Bits7-0: SCR7-SCR0: SPI Clock Rate
These bits determine the frequency of the SCK output when the SPI module is configured for master mode operation. The SCK clock frequency is a divided down version of the system clock, and is given in the following equations:

$f_{SCK} = 0.5 * f_{SYSCLK} / (SPI0CKR + 1)$, for $0 \leq SPI0CKR \leq 255$,

Figure 17.8. SPI0DAT: SPI Data Register

R/W	R/W	R/W	R/W	R/W	R/W	R/W	R/W	Reset Value
								00000000
Bit7	Bit6	Bit5	Bit4	Bit3	Bit2	Bit1	Bit0	SFR Address: 0x9B

Bits7-0: SPI0DAT: SPI0 Transmit and Receive Data.
The SPI0DAT register is used to transmit and receive SPI data. Writing data to SPI0DAT places the data immediately into the shift register and initiates a transfer when in Master Mode. A read of SPI0DAT returns the contents of the receive buffer.

18. UART

The UART is a serial port capable of asynchronous transmission. The UART can function in full duplex mode. In all modes, receive data is buffered in a holding register. This allows the UART to start reception of a second incoming data byte before software has finished reading the previous data byte.

The UART has an associated Serial Control Register (SCON) and a Serial Data Buffer (SBUF) in the SFRs. The single SBUF location provides access to both transmit and receive registers. Reads access the Receive register and writes access the Transmit register automatically.

The UART is capable of generating interrupts if enabled. The UART has two sources of interrupts: a Transmit Interrupt flag, TI (SCON.1) set when transmission of a data byte is complete, and a Receive Interrupt flag, RI (SCON.0) set when reception of a data byte is complete. The UART interrupt flags are not cleared by hardware when the CPU vectors to the interrupt service routine. They must be cleared manually by software. This allows software to determine the cause of the UART interrupt (transmit complete or receive complete).

Figure 18.1. UART Block Diagram

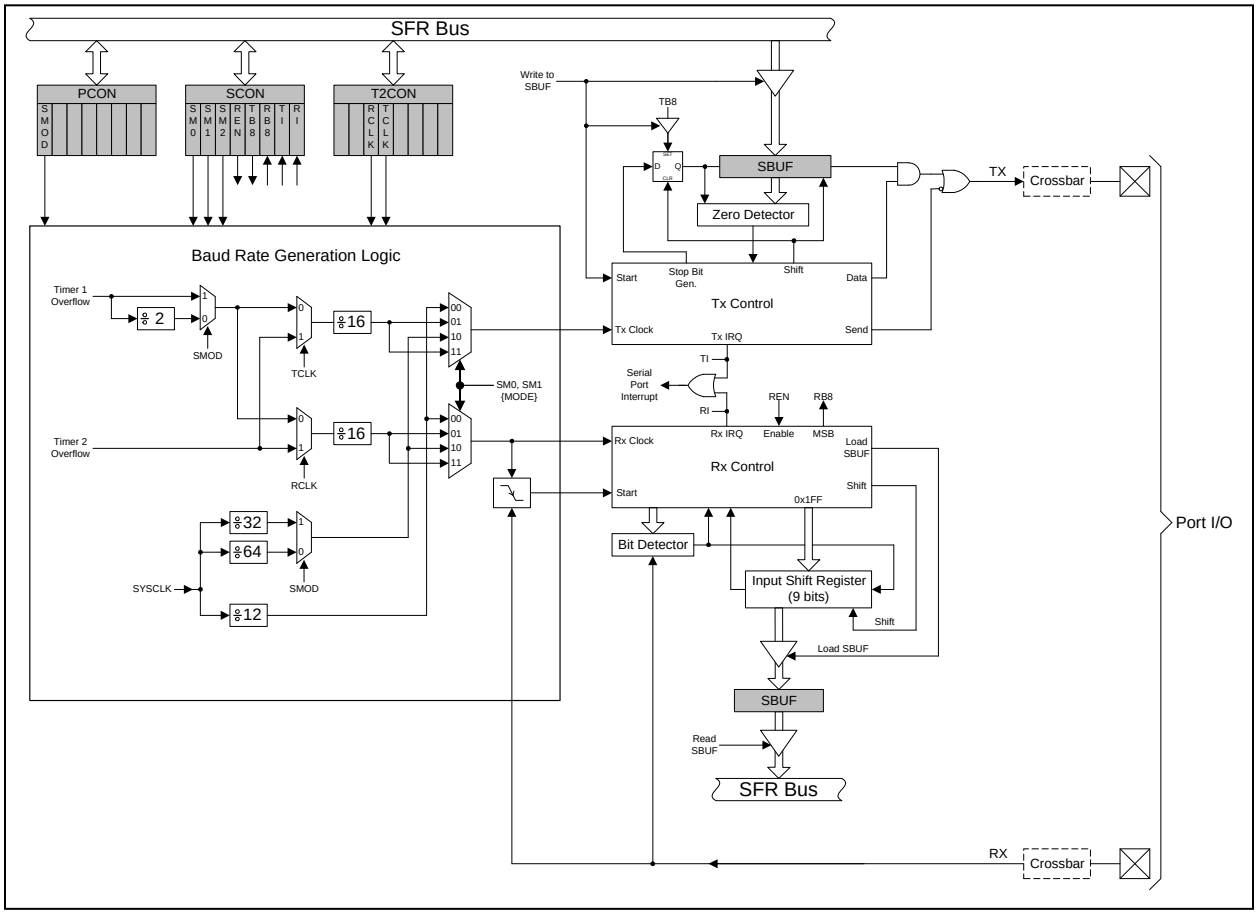

18.1. UART Operational Modes

The UART provides four operating modes (one synchronous and three asynchronous) selected by setting configuration bits in the SCON register. These four modes offer different baud rates and communication protocols. The four modes are summarized in Table 18.1 below. Detailed descriptions follow.

Table 18.1. UART Modes

Mode	Synchronization	Baud Clock	Data Bits	Start/Stop Bits
0	Synchronous	SYSCLK/12	8	None
1	Asynchronous	Timer 1 or Timer 2 Overflow	8	1 Start, 1 Stop
2	Asynchronous	SYSCLK/32 or SYSCLK/64	9	1 Start, 1 Stop
3	Asynchronous	Timer 1 or Timer 2 Overflow	9	1 Start, 1 Stop

18.1.1. Mode 0: Synchronous Mode

Mode 0 provides synchronous, half-duplex communication. Serial data is transmitted and received on the RX pin. The TX pin provides the shift clock for both transmit and receive. The MCU must be the master since it generates the shift clock for transmission in both directions (see the interconnect diagram in Figure 18.2).

Eight data bits are transmitted/received, LSB first (see the timing diagram in Figure 18.3). Data transmission begins when an instruction writes a data byte to the SBUF register. The TI Transmit Interrupt Flag (SCON.1) is set at the end of the eighth bit time. Data reception begins when the REN Receive Enable bit (SCON.4) is set to logic 1 and the RI Receive Interrupt Flag (SCON.0) is cleared. One cycle after the eighth bit is shifted in, the RI flag is set and reception stops until software clears the RI bit. An interrupt will occur if enabled when either TI or RI is set.

The Mode 0 baud rate is the system clock frequency divided by twelve. RX is forced to open-drain in mode 0, and an external pull-up will typically be required.

Figure 18.2. UART Mode 0 Interconnect

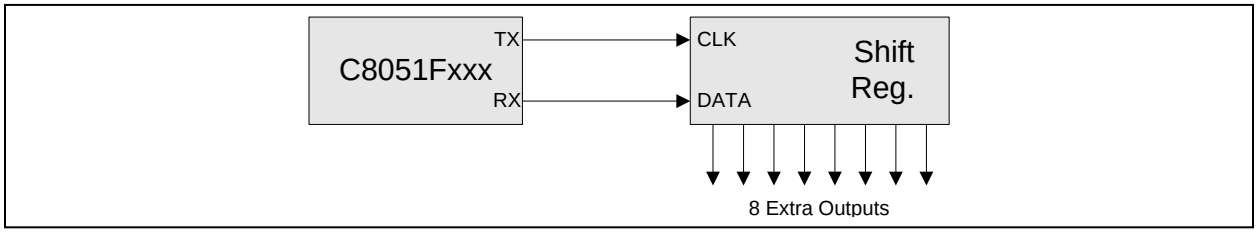

Figure 18.3. UART Mode 0 Timing Diagram

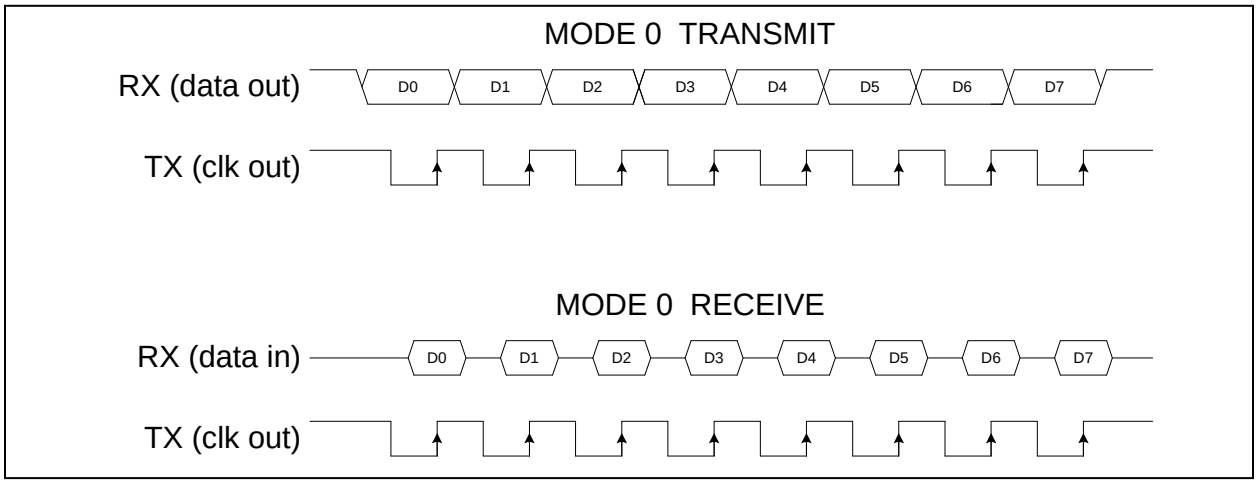

Mode 1 provides standard asynchronous, full duplex communication using a total of 10 bits per data byte: one start bit, eight data bits (LSB first), and one stop bit (see the timing diagram in Figure 18.4). Data are transmitted from the TX pin and received at the RX pin (see the interconnection diagram in Figure 18.5). On receive, the eight data bits are stored in SBUF and the stop bit goes into RB8 (SCON.2).

Data transmission begins when an instruction writes a data byte to the SBUF register. The TI Transmit Interrupt Flag (SCON.1) is set at the end of the transmission (the beginning of the stop-bit time). Data reception can begin any time after the REN Receive Enable bit (SCON.4) is set to logic 1. After the stop bit is received, the data byte will be loaded into the SBUF receive register if the following conditions are met: RI must be logic 0, and if SM2 is logic 1, the stop bit must be logic 1.

If these conditions are met, the eight bits of data are stored in SBUF, the stop bit is stored in RB8, and the RI flag is set. If these conditions are not met, SBUF and RB8 will not be loaded and the RI flag will not be set. An interrupt will occur if enabled when either TI or RI is set.

Figure 18.4. UART Mode 1 Timing Diagram

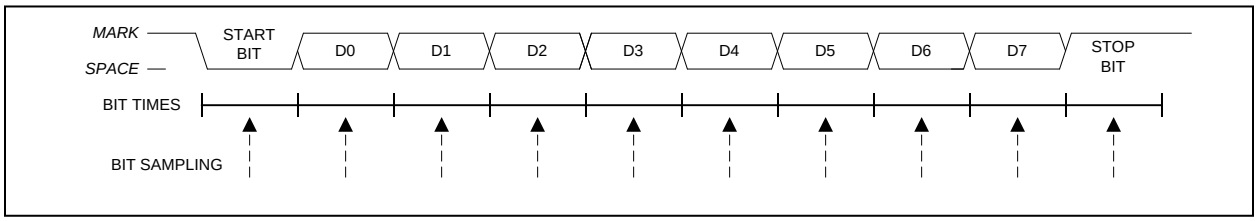

The baud rate generated in Mode 1 is a function of timer overflow. The UART can use Timer 1 operating in *8-bit Counter/Timer with Auto-Reload Mode*, or Timer 2 operating in *Baud Rate Generator Mode* to generate the baud rate (note that the TX and RX clock sources are selected separately). On each timer overflow event (a rollover from all ones (0xFF for Timer 1, 0xFFFF for Timer 2) to zero), a clock is sent to the baud rate logic.

When Timer 1 is selected as a baud rate source, the SMOD bit (PCON.7) selects whether or not to divide the Timer 1 overflow rate by two. On reset, the SMOD bit is logic 0, thus selecting the lower speed baud rate by default. The SMOD bit affects the baud rate generated by Timer 1 as follows:

*Mode 1 Baud Rate = (1 / 32) * T1_OVERFLOWRATE (when the SMOD bit is set to logic 0).*
*Mode 1 Baud Rate = (1 / 16) * T1_OVERFLOWRATE (when the SMOD bit is set to logic 1).*

When Timer 2 is selected as a baud rate source, the baud rate generated by Timer 2 is as follows:

*Mode 1 Baud Rate = (1 / 16) * T2_OVERFLOWRATE.*

The Timer 1 overflow rate is determined by the Timer 1 clock source (T1CLK) and reload value (TH1). The frequency of T1CLK can be selected as SYSCLK, SYSCLK/12, or an external clock source. The Timer 1 overflow rate can be calculated as follows:

T1_OVERFLOWRATE = T1CLK / (256 – TH1).

For example, assume TMOD = 0x20.
If T1M (CKCON.4) is logic 1, then the above equation becomes:

T1_OVERFLOWRATE = (SYSCLK) / (256 – TH1).

If T1M (CKCON.4) is logic 0, then the above equation becomes:

T1_OVERFLOWRATE = (SYSCLK/12) / (256 – TH1).

The Timer 2 overflow rate, when in *Baud Rate Generator Mode* and using an internal clock source, is determined solely by the Timer 2 16-bit reload value (RCAP2H:RCAP2L). The Timer 2 clock source is fixed at SYSCLK/2. The Timer 2 overflow rate can be calculated as follows:

T2_OVERFLOWRATE = (SYSCLK/2) / (65536 – [RCAP2H:RCAP2L]).

Timer 2 can be selected as the baud rate generator for RX and/or TX by setting RCLK (T2CON.5) and/or TCLK (T2CON.4), respectively. When either RCLK or TCLK is set to logic 1, Timer 2 interrupts are automatically disabled and the timer is forced into *Baud Rate Generator Mode* with SYSCLK/2 as its clock source. If a different timebase is required, setting the C/T2 bit (T2CON.1) to logic 1 will allow Timer 2 to be clocked from the external input pin T2. See the Timers section for complete timer configuration details.

Figure 18.5. UART Modes 1, 2, and 3 Interconnect Diagram

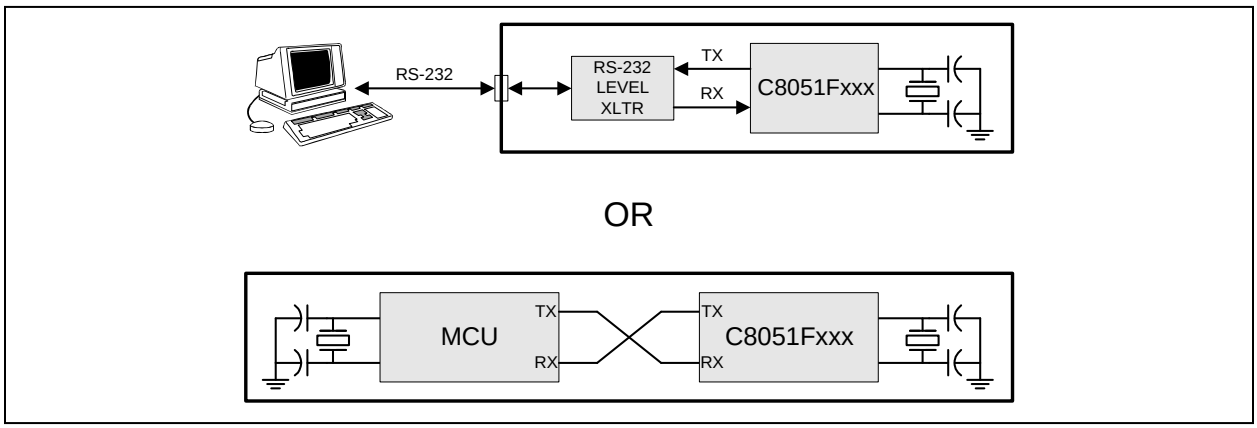

18.1.3. Mode 2: 9-Bit UART, Fixed Baud Rate

Mode 2 provides asynchronous, full-duplex communication using a total of eleven bits per data byte: a start bit, 8 data bits (LSB first), a programmable ninth data bit, and a stop bit (see timing diagram in Figure 18.6). On transmit, the ninth data bit is determined by the value in TB8 (SCON.3). It can be assigned the value of the parity flag P in the PSW or used in multiprocessor communications. On receive, the ninth data bit goes into RB8 (SCON.2) and the stop bit is ignored.

Data transmission begins when an instruction writes a data byte to the SBUF register. The TI Transmit Interrupt Flag (SCON.1) is set at the end of the transmission (the beginning of the stop-bit time). Data reception can begin any time after the REN Receive Enable bit (SCON.4) is set to logic 1. After the stop bit is received, the data byte will be loaded into the SBUF receive register if the following conditions are met: RI must be logic 0, and if SM2 is logic 1, the 9th bit must be logic 1.

If these conditions are met, the eight bits of data are stored in SBUF, the ninth bit is stored in RB8 and the RI flag is set. If these conditions are not met, SBUF and RB8 will not be loaded and the RI flag will not be set. An interrupt will occur if enabled when either TI or RI are set.

The baud rate in Mode 2 is a direct function of the system clock frequency as follows:

$$\textit{Mode 2 Baud Rate} = 2^{SMOD} * (SYSCLK / 64).$$

The SMOD bit (PCON.7) selects whether to divide SYSCLK by 32 or 64. In the formula, 2 is raised to the power SMOD, resulting in a baud rate of either 1/32 or 1/64 of the system clock frequency. On reset, the SMOD bit is logic 0, thus selecting the lower speed baud rate by default.

Figure 18.6. UART Modes 2 and 3 Timing Diagram

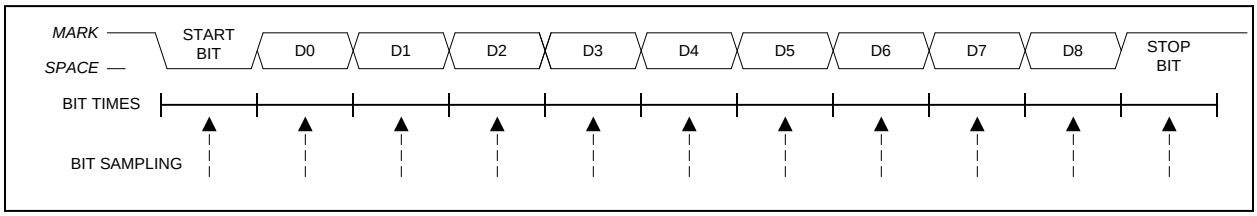

18.1.4. Mode 3: 9-Bit UART, Variable Baud Rate

Mode 3 is the same as Mode 2 in all respects except the baud rate is variable. The baud rate is determined in the same manner as for Mode 1. Mode 3 operation transmits 11 bits: a start bit, 8 data bits (LSB first), a programmable ninth data bit, and a stop bit. Timer 1 or Timer 2 overflows generate the baud rate just as with Mode 1. In summary, Mode 3 transmits using the same protocol as Mode 2 but with Mode 1 baud rate generation.

18.2. Multiprocessor Communications

Modes 2 and 3 support multiprocessor communication between a master processor and one or more slave processors by special use of the ninth data bit. When a master processor wants to transmit to one or more slaves, it first sends an address byte to select the target(s). An address byte differs from a data byte in that its ninth bit is logic 1; in a data byte, the ninth bit is always set to logic 0.

Setting the SM2 bit (SCON.5) of a slave processor configures its UART such that when a stop bit is received, the UART will generate an interrupt only if the ninth bit is logic one (RB8 = 1) signifying an address byte has been received. In the UART's interrupt handler, software will compare the received address with the slave's own assigned 8-bit address. If the addresses match, the slave will clear its SM2 bit to enable interrupts on the reception of the following data byte(s). Slaves that weren't addressed leave their SM2 bits set and do not generate interrupts on the reception of the following data bytes, thereby ignoring the data. Once the entire message is received, the addressed slave resets its SM2 bit to ignore all transmissions until it receives the next address byte.

Multiple addresses can be assigned to a single slave and/or a single address can be assigned to multiple slaves, thereby enabling "broadcast" transmissions to more than one slave simultaneously. The master processor can be configured to receive all transmissions or a protocol can be implemented such that the master/slave role is temporarily reversed to enable half-duplex transmission between the original master and slave(s).

Figure 18.7. UART Multi-Processor Mode Interconnect Diagram

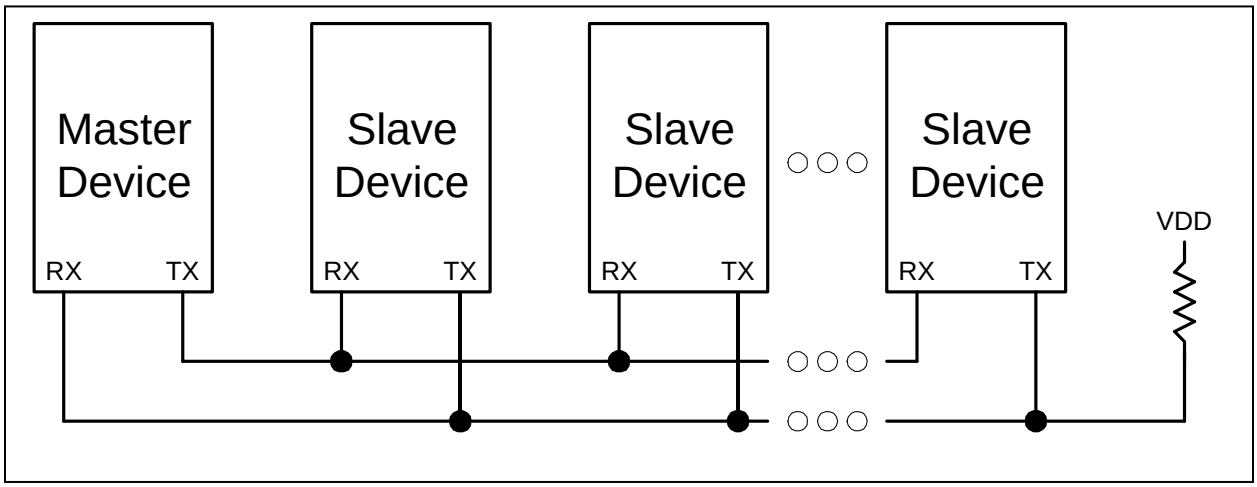

Table 18.2. Oscillator Frequencies for Standard Baud Rates

Oscillator Frequency (MHz)	Divide Factor	Timer 1 Load Value*	Resulting Baud Rate**
24.0	208	0xF3	115200 (115384)
23.592	205	0xF3	115200 (113423)
22.1184	192	0xF4	115200
18.432	160	0xF6	115200
16.5888	144	0xF7	115200
14.7456	128	0xF8	115200
12.9024	112	0xF9	115200
11.0592	96	0xFA	115200
9.216	80	0xFB	115200
7.3728	64	0xFC	115200
5.5296	48	0xFD	115200
3.6864	32	0xFE	115200
1.8432	16	0xFF	115200
24.576	320	0xEC	76800
25.0	434	0xE5	57600 (57870)
25.0	868	0xCA	28800
24.576	848	0xCB	28800 (28921)
24.0	833	0xCC	28800 (28846)
23.592	819	0xCD	28800 (28911)
22.1184	768	0xD0	28800
18.432	640	0xD8	28800
16.5888	576	0xDC	28800
14.7456	512	0xE0	28800
12.9024	448	0xE4	28800
11.0592	384	0xE8	28800
9.216	320	0xEC	28800
7.3728	256	0xF0	28800
5.5296	192	0xF4	28800
3.6864	128	0xF8	28800
1.8432	64	0xFC	28800

* Assumes SMOD=1 and T1M=1.
** Numbers in parenthesis show the actual baud rate.

Figure 18.8. SBUF: Serial (UART) Data Buffer Register

R/W	R/W	R/W	R/W	R/W	R/W	R/W	R/W	Reset Value
								00000000
Bit7	Bit6	Bit5	Bit4	Bit3	Bit2	Bit1	Bit0	SFR Address: 0x99

Bits7-0: SBUF.[7:0]: Serial Data Buffer Bits 7-0 (MSB-LSB)
This is actually two registers; a transmit and a receive buffer register. When data is moved to SBUF, it goes to the transmit buffer and is held for serial transmission. Moving a byte to SBUF is what initiates the transmission. When data is moved from SBUF, it comes from the receive buffer.

Figure 18.9. SCON: Serial Port Control Register

R/W	R/W	R/W	R/W	R/W	R/W	R/W	R/W	Reset Value
SM0	SM1	SM2	REN	TB8	RB8	TI	RI	00000000
Bit7	Bit6	Bit5	Bit4	Bit3	Bit2	Bit1	Bit0 (bit addressable)	SFR Address: 0x98

Bits7-6: SM0-SM1: Serial Port Operation Mode.
These bits select the Serial Port Operation Mode.

SM0	SM1	Mode
0	0	Mode 0: Synchronous Mode
0	1	Mode 1: 8-Bit UART, Variable Baud Rate
1	0	Mode 2: 9-Bit UART, Fixed Baud Rate
1	1	Mode 3: 9-Bit UART, Variable Baud Rate

Bit5: SM2: Multiprocessor Communication Enable.
The function of this bit is dependent on the Serial Port Operation Mode.
Mode 0: No effect
Mode 1: Checks for valid stop bit.
0: Logic level of stop bit is ignored.
1: RI will only be activated if stop bit is logic level 1.
Mode 2 and 3: Multiprocessor Communications Enable.
0: Logic level of ninth bit is ignored.
1: RI is set and an interrupt is generated only when the ninth bit is logic 1.

Bit4: REN: Receive Enable.
This bit enables/disables the UART receiver.
0: UART reception disabled.
1: UART reception enabled.

Bit3: TB8: Ninth Transmission Bit.
The logic level of this bit will be assigned to the ninth transmission bit in Modes 2 and 3. It is not used in Modes 0 and 1. Set or cleared by software as required.

Bit2: RB8: Ninth Receive Bit.
The bit is assigned the logic level of the ninth bit received in Modes 2 and 3. In Mode 1, if SM2 is logic 0, RB8 is assigned the logic level of the received stop bit. RB8 is not used in Mode 0.

Bit1: TI: Transmit Interrupt Flag.
Set by hardware when a byte of data has been transmitted by the UART (after the 8th bit in Mode 0, or at the beginning of the stop bit in other modes). When the UART interrupt is enabled, setting this bit causes the CPU to vector to the UART interrupt service routine. This bit must be cleared manually by software

Bit0: RI: Receive Interrupt Flag.
Set by hardware when a byte of data has been received by the UART (after the 8th bit in Mode 0, or after the stop bit in other modes – see SM2 bit for exception). When the UART interrupt is enabled, setting this bit causes the CPU to vector to the UART interrupt service routine. This bit must be cleared manually by software.

19. TIMERS

Each MCU implements four counter/timers: three are 16-bit counter/timers compatible with those found in the standard 8051, and one is a 16-bit timer for use with the ADC, SMBus, or for general purpose use. These can be used to measure time intervals, count external events and generate periodic interrupt requests. Timer 0 and Timer 1 are nearly identical and have four primary modes of operation. Timer 2 offers additional capabilities not available in Timers 0 and 1. Timer 3 is similar to Timer 2, but without the capture or Baud Rate Generator modes.

Timer 0 and Timer 1:	Timer 2:	Timer 3:
13-bit counter/timer	16-bit counter/timer with auto-reload	16-bit timer with auto-reload
16-bit counter/timer	16-bit counter/timer with capture	
8-bit counter/timer with auto-reload	Baud rate generator	
Two 8-bit counter/timers (Timer 0 only)		

When functioning as a timer, the counter/timer registers are incremented on each clock tick. Clock ticks are derived from the system clock divided by either one or twelve as specified by the Timer Clock Select bits (T2M-T0M) in CKCON. The twelve-clocks-per-tick option provides compatibility with the older generation of the 8051 family. Applications that require a faster timer can use the one-clock-per-tick option.

When functioning as a counter, a counter/timer register is incremented on each high-to-low transition at the selected input pin for T0, T1, or T2. Events with a frequency of up to one-fourth the system clock's frequency can be counted. The input signal need not be periodic, but it should be held at a given level for at least two full system clock cycles to ensure the level is sampled.

19.1. Timer 0 and Timer 1

Timer 0 and Timer 1 are accessed and controlled through SFRs. Each counter/timer is implemented as a 16-bit register accessed as two separate bytes: a low byte (TL0 or TL1) and a high byte (TH0 or TH1). The Counter/Timer Control (TCON) register is used to enable Timer 0 and Timer 1 as well as indicate their status. Both counter/timers operate in one of four primary modes selected by setting the Mode Select bits M1-M0 in the Counter/Timer Mode (TMOD) register. Each timer can be configured independently. Following is a detailed description of each operating mode.

19.1.1. Mode 0: 13-bit Counter/Timer

Timer 0 and Timer 1 operate as a 13-bit counter/timer in Mode 0. The following describes the configuration and operation of Timer 0. However, both timers operate identically and Timer 1 is configured in the same manner as described for Timer 0.

The TH0 register holds the eight MSBs of the 13-bit counter/timer. TL0 holds the five LSBs in bit positions TL0.4-TL0.0. The three upper bits of TL0 (TL0.7-TL0.5) are indeterminate and should be masked out or ignored when reading. As the 13-bit timer register increments and overflows from 0x1FFF (all ones) to 0x0000, the timer overflow flag TF0 (TCON.5) is set and an interrupt will occur if enabled.

The C/T0 bit (TMOD.2) selects the counter/timer's clock source. Clearing C/T selects the system clock as the input for the timer. When C/T0 is set to logic 1, high-to-low transitions at the selected input pin increment the timer register. (Refer to Port I/O Section 15.1 for information on selecting and configuring external I/O pins.)

Setting the TR0 bit (TCON.4) enables the timer when either GATE0 (TMOD.3) is 0 or the input signal /INT0 is logic-level one. Setting GATE0 to logic 1 allows the timer to be controlled by the external input signal /INT0, facilitating pulse width measurements.

TR0	GATE0	/INT0	Counter/Timer
0	X	X	Disabled
1	0	X	Enabled
1	1	0	Disabled
1	1	1	Enabled

X = Don't Care

Setting TR0 does not reset the timer register. The timer register should be initialized to the desired value before enabling the timer.

TL1 and TH1 form the 13-bit register for Timer 1 in the same manner as described above for TL0 and TH0. Timer 1 is configured and controlled using the relevant TCON and TMOD bits just as with Timer 0.

Figure 19.1. T0 Mode 0 Block Diagram

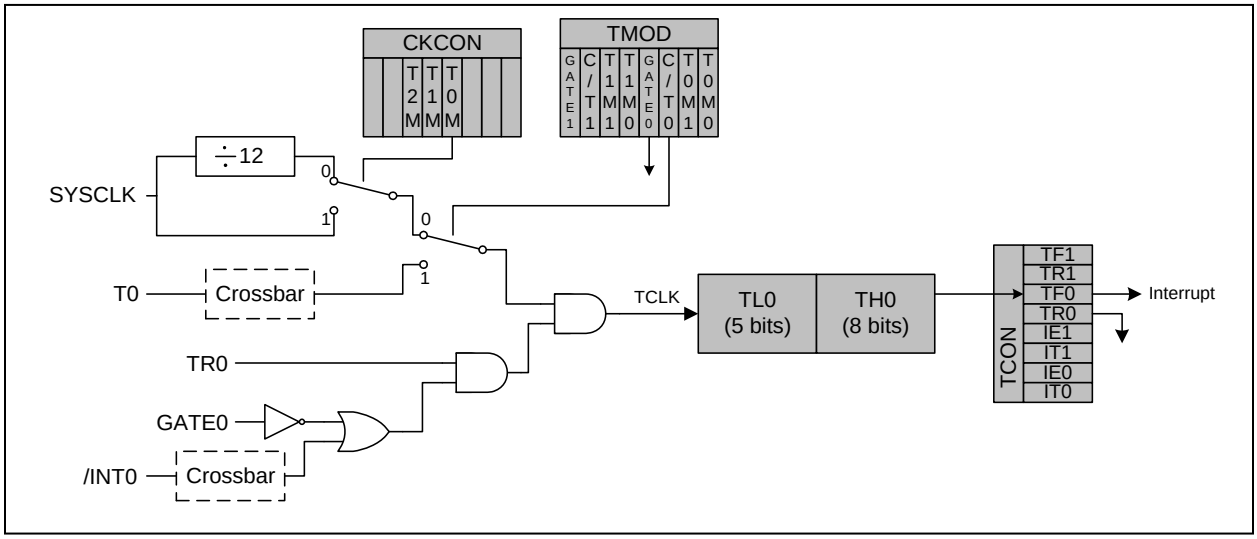

19.1.2. Mode 1: 16-bit Counter/Timer

Mode 1 operation is the same as Mode 0, except that the counter/timer registers use all 16 bits. The counter/timers are enabled and configured in Mode 1 in the same manner as for Mode 0.

19.1.3. Mode 2: 8-bit Counter/Timer with Auto-Reload

Mode 2 configures Timer 0 and Timer 1 to operate as 8-bit counter/timers with automatic reload of the start value. The TL0 holds the count and TH0 holds the reload value. When the count in TL0 overflows from all ones to 0x00, the timer overflow flag TF0 (TCON.5) is set and the counter in TL0 is reloaded from TH0. If enabled, an interrupt will occur when the TF0 flag is set. The reload value in TH0 is not changed. TL0 must be initialized to the desired value before enabling the timer for the first count to be correct. When in Mode 2, Timer 1 operates identically to Timer 0. Both counter/timers are enabled and configured in Mode 2 in the same manner as Mode 0.

Figure 19.2. T0 Mode 2 Block Diagram

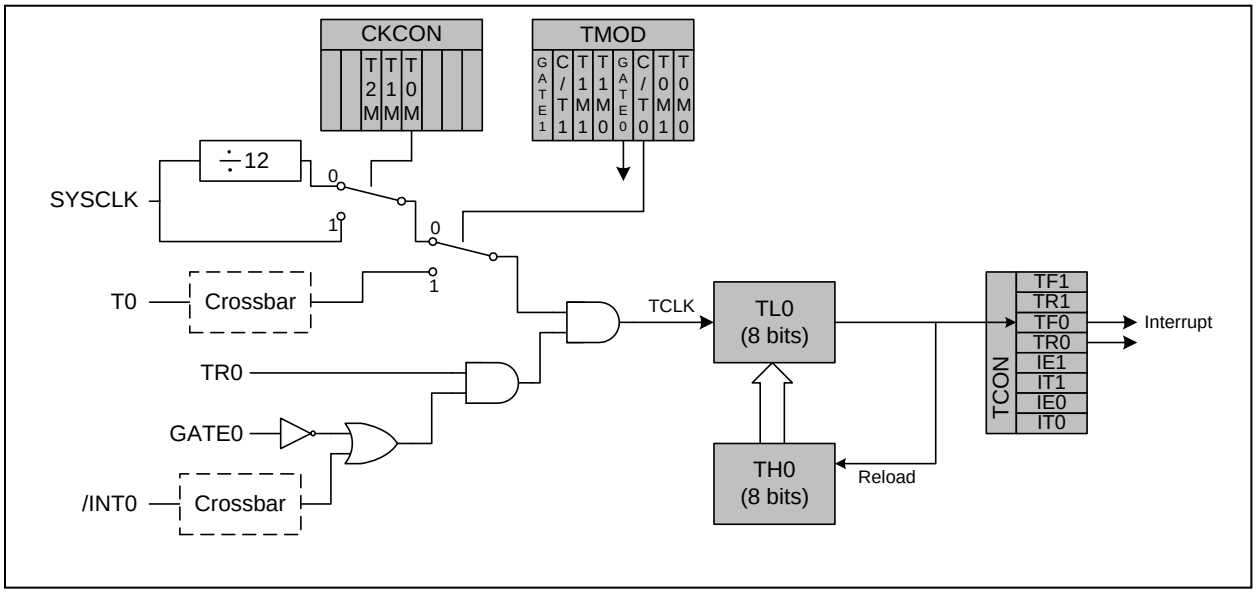

19.1.4. Mode 3: Two 8-bit Counter/Timers (Timer 0 Only)

Timer 0 and Timer 1 behave differently in Mode 3. Timer 0 is configured as two separate 8-bit counter/timers held in TL0 and TH0. The counter/timer in TL0 is controlled using the Timer 0 control/status bits in TCON and TMOD: TR0, C/T0, GATE0 and TF0. It can use either the system clock or an external input signal as its timebase. The TH0 register is restricted to a timer function sourced by the system clock. TH0 is enabled using the Timer 1 run control bit TR1. TH0 sets the Timer 1 overflow flag TF1 on overflow and thus controls the Timer 1 interrupt.

Timer 1 is inactive in Mode 3, so with Timer 0 in Mode 3, Timer 1 can be turned off and on by switching it into and out of its Mode 3. When Timer 0 is in Mode 3, Timer 1 can be operated in Modes 0, 1 or 2, but cannot be clocked by external signals nor set the TF1 flag and generate an interrupt. However, the Timer 1 overflow can be used for baud rate generation. Refer to Section 18 (UART) for information on configuring Timer 1 for baud rate generation.

Figure 19.3. T0 Mode 3 Block Diagram

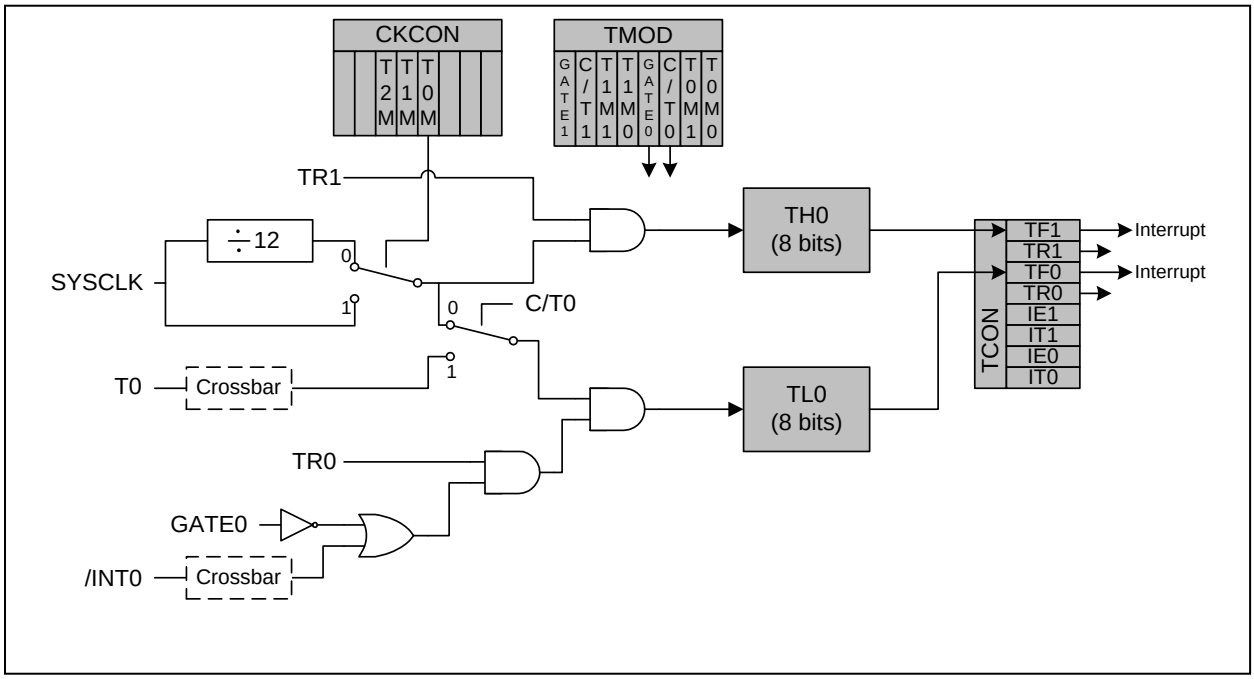

Figure 19.4. TCON: Timer Control Register

R/W	R/W	R/W	R/W	R/W	R/W	R/W	R/W	Reset Value
TF1	TR1	TF0	TR0	IE1	IT1	IE0	IT0	00000000
Bit7	Bit6	Bit5	Bit4	Bit3	Bit2	Bit1	Bit0 (bit addressable)	SFR Address: 0x88

Bit7: TF1: Timer 1 Overflow Flag.
Set by hardware when Timer 1 overflows. This flag can be cleared by software but is automatically cleared when the CPU vectors to the Timer 1 interrupt service routine.
0: No Timer 1 overflow detected.
1: Timer 1 has overflowed.

Bit6: TR1: Timer 1 Run Control.
0: Timer 1 disabled.
1: Timer 1 enabled.

Bit5: TF0: Timer 0 Overflow Flag.
Set by hardware when Timer 0 overflows. This flag can be cleared by software but is automatically cleared when the CPU vectors to the Timer 0 interrupt service routine.
0: No Timer 0 overflow detected.
1: Timer 0 has overflowed.

Bit4: TR0: Timer 0 Run Control.
0: Timer 0 disabled.
1: Timer 0 enabled.

Bit3: IE1: External Interrupt 1.
This flag is set by hardware when an edge/level of type defined by IT1 is detected. It can be cleared by software but is automatically cleared when the CPU vectors to the External Interrupt 1 service routine if IT1 = 1. This flag is the inverse of the /INT1 input signal's logic level when IT1 = 0.

Bit2: IT1: Interrupt 1 Type Select.
This bit selects whether the configured /INT1 signal will detect falling edge or active-low level-sensitive interrupts.
0: /INT1 is level triggered.
1: /INT1 is edge triggered.

Bit1: IE0: External Interrupt 0.
This flag is set by hardware when an edge/level of type defined by IT0 is detected. It can be cleared by software but is automatically cleared when the CPU vectors to the External Interrupt 0 service routine if IT0 = 1. This flag is the inverse of the /INT0 input signal's logic level when IT0 = 0.

Bit0: IT0: Interrupt 0 Type Select.
This bit selects whether the configured /INT0 signal will detect falling edge or active-low level-sensitive interrupts.
0: /INT0 is level triggered.
1: /INT0 is edge triggered.

Figure 19.5. TMOD: Timer Mode Register

R/W	R/W	R/W	R/W	R/W	R/W	R/W	R/W	Reset Value
GATE1	C/T1	T1M1	T1M0	GATE0	C/T0	T0M1	T0M0	00000000
Bit7	Bit6	Bit5	Bit4	Bit3	Bit2	Bit1	Bit0	SFR Address: 0x89

Bit7: GATE1: Timer 1 Gate Control.
0: Timer 1 enabled when TR1 = 1 irrespective of /INT1 logic level.
1: Timer 1 enabled only when TR1 = 1 AND /INT1 = logic level one.

Bit6: C/T1: Counter/Timer 1 Select.
0: Timer Function: Timer 1 incremented by clock defined by T1M bit (CKCON.4).
1: Counter Function: Timer 1 incremented by high-to-low transitions on external input pin (T1).

Bits5-4: T1M1-T1M0: Timer 1 Mode Select.
These bits select the Timer 1 operation mode.

T1M1	T1M0	Mode
0	0	Mode 0: 13-bit counter/timer
0	1	Mode 1: 16-bit counter/timer
1	0	Mode 2: 8-bit counter/timer with auto-reload
1	1	Mode 3: Timer 1 Inactive/stopped

Bit3: GATE0: Timer 0 Gate Control.
0: Timer 0 enabled when TR0 = 1 irrespective of /INT0 logic level.
1: Timer 0 enabled only when TR0 = 1 AND /INT0 = logic level one.

Bit2: C/T0: Counter/Timer Select.
0: Timer Function: Timer 0 incremented by clock defined by T0M bit (CKCON.3).
1: Counter Function: Timer 0 incremented by high-to-low transitions on external input pin (T0).

Bits1-0: T0M1-T0M0: Timer 0 Mode Select.
These bits select the Timer 0 operation mode.

T0M1	T0M0	Mode
0	0	Mode 0: 13-bit counter/timer
0	1	Mode 1: 16-bit counter/timer
1	0	Mode 2: 8-bit counter/timer with auto-reload
1	1	Mode 3: Two 8-bit counter/timers

Figure 19.6. CKCON: Clock Control Register

R/W	R/W	R/W	R/W	R/W	R/W	R/W	R/W	Reset Value
-	-	T2M	T1M	T0M	Reserved	Reserved	Reserved	00000000
Bit7	Bit6	Bit5	Bit4	Bit3	Bit2	Bit1	Bit0	SFR Address: 0x8E

Bits7-6: UNUSED. Read = 00b, Write = don't care.

Bit5: T2M: Timer 2 Clock Select.
This bit controls the division of the system clock supplied to Timer 2. This bit is ignored when the timer is in baud rate generator mode or counter mode (i.e. C/T2 = 1).
0: Timer 2 uses the system clock divided by 12.
1: Timer 2 uses the system clock.

Bit4: T1M: Timer 1 Clock Select.
This bit controls the division of the system clock supplied to Timer 1.
0: Timer 1 uses the system clock divided by 12.
1: Timer 1 uses the system clock.

Bit3: T0M: Timer 0 Clock Select.
This bit controls the division of the system clock supplied to Counter/Timer 0.
0: Counter/Timer uses the system clock divided by 12.
1: Counter/Timer uses the system clock.

Bits2-0: Reserved. Read = 000b, Must Write = 000.

Figure 19.7. TL0: Timer 0 Low Byte

R/W	R/W	R/W	R/W	R/W	R/W	R/W	R/W	Reset Value
								00000000
Bit7	Bit6	Bit5	Bit4	Bit3	Bit2	Bit1	Bit0	SFR Address: 0x8A

Bits 7-0: TL0: Timer 0 Low Byte.
The TL0 register is the low byte of the 16-bit Timer 0.

Figure 19.8. TL1: Timer 1 Low Byte

R/W	R/W	R/W	R/W	R/W	R/W	R/W	R/W	Reset Value
								00000000
Bit7	Bit6	Bit5	Bit4	Bit3	Bit2	Bit1	Bit0	SFR Address: 0x8B

Bits 7-0: TL1: Timer 1 Low Byte.
The TL1 register is the low byte of the 16-bit Timer 1.

Figure 19.9. TH0: Timer 0 High Byte

R/W	R/W	R/W	R/W	R/W	R/W	R/W	R/W	Reset Value
								00000000
Bit7	Bit6	Bit5	Bit4	Bit3	Bit2	Bit1	Bit0	SFR Address: 0x8C

Bits 7-0: TH0: Timer 0 High Byte.
The TH0 register is the high byte of the 16-bit Timer 0.

Figure 19.10. TH1: Timer 1 High Byte

R/W	R/W	R/W	R/W	R/W	R/W	R/W	R/W	Reset Value
								00000000
Bit7	Bit6	Bit5	Bit4	Bit3	Bit2	Bit1	Bit0	SFR Address: 0x8D

Bits 7-0: TH1: Timer 1 High Byte.
The TH1 register is the high byte of the 16-bit Timer 1.

19.2. Timer 2

Timer 2 is a 16-bit counter/timer formed by the two 8-bit SFRs: TL2 (low byte) and TH2 (high byte). As with Timers 0 and 1, Timer 2 can use either the system clock or transitions on an external input pin as its clock source. The Counter/Timer Select bit C/T2 bit (T2CON.1) selects the clock source for Timer 2. Clearing C/T2 selects the system clock as the input for the timer (divided by either one or twelve as specified by the Timer Clock Select bit T2M in CKCON). When C/T2 is set to 1, high-to-low transitions at the T2 input pin increment the counter/timer register. (Refer to Section 14 for information on selecting and configuring external I/O pins.) Timer 2 can also be used to start an ADC Data Conversion.

Timer 2 offers capabilities not found in Timer 0 and Timer 1. It operates in one of three modes: 16-bit Counter/Timer with Capture, 16-bit Counter/Timer with Auto-Reload or Baud Rate Generator Mode. Timer 2's operating mode is selected by setting configuration bits in the Timer 2 Control (T2CON) register. Below is a summary of the Timer 2 operating modes and the T2CON bits used to configure the counter/timer. Detailed descriptions of each mode follow.

RCLK	TCLK	CP/RL2	TR2	Mode
0	0	1	1	16-bit Counter/Timer with Capture
0	0	0	1	16-bit Counter/Timer with Auto-Reload
0	1	X	1	Baud Rate Generator for TX
1	0	X	1	Baud Rate Generator for RX
1	1	X	1	Baud Rate Generator for TX and RX
X	X	X	0	Off

19.2.1. Mode 0: 16-bit Counter/Timer with Capture

In this mode, Timer 2 operates as a 16-bit counter/timer with capture facility. A high-to-low transition on the T2EX input pin causes the 16-bit value in Timer 2 (TH2, TL2) to be loaded into the capture registers (RCAP2H, RCAP2L).

Timer 2 can use either SYSCLK, SYSCLK divided by 12, or high-to-low transitions on the external T2 pin as its clock source when operating in Counter/Timer with Capture mode. Clearing the C/T2 bit (T2CON.1) selects the system clock as the input for the timer (divided by one or twelve as specified by the Timer Clock Select bit T2M in CKCON). When C/T2 is set to logic 1, a high-to-low transition at the T2 input pin increments the counter/timer register. As the 16-bit counter/timer register increments and overflows from 0xFFFF to 0x0000, the TF2 timer overflow flag (T2CON.7) is set and an interrupt will occur if the interrupt is enabled.

Counter/Timer with Capture mode is selected by setting the Capture/Reload Select bit CP/RL2 (T2CON.0) and the Timer 2 Run Control bit TR2 (T2CON.2) to logic 1. The Timer 2 External Enable EXEN2 (T2CON.3) must also be set to logic 1 to enable a capture. If EXEN2 is cleared, transitions on T2EX will be ignored.

Figure 19.11. T2 Mode 0 Block Diagram

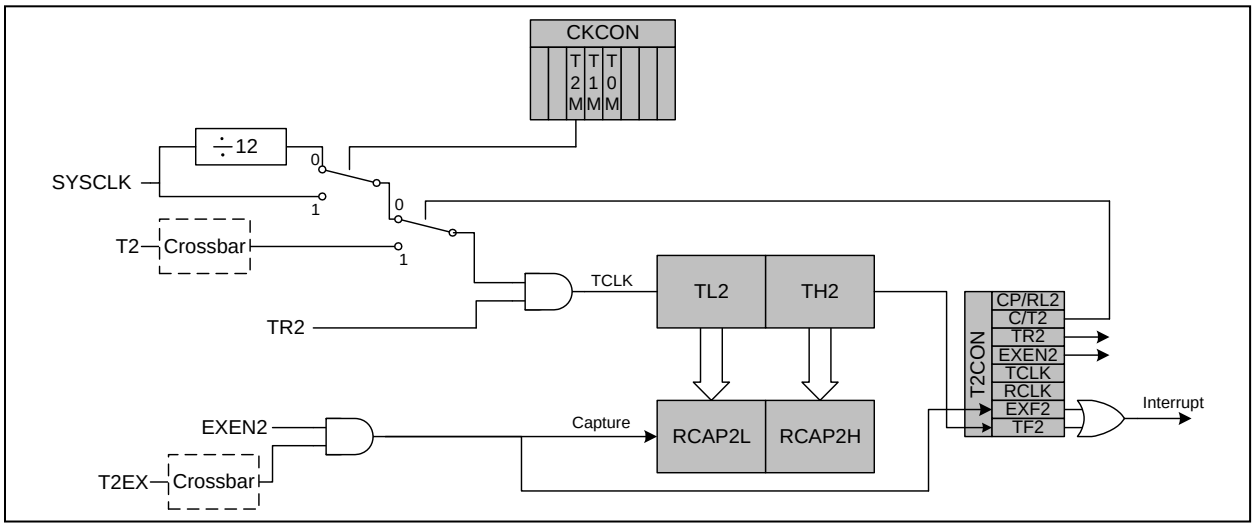

19.2.2. Mode 1: 16-bit Counter/Timer with Auto-Reload

The Counter/Timer with Auto-Reload mode sets the TF2 timer overflow flag when the counter/timer register overflows from 0xFFFF to 0x0000. An interrupt is generated if enabled. On overflow, the 16-bit value held in the two capture registers (RCAP2H, RCAP2L) is automatically loaded into the counter/timer register and the timer is restarted.

Counter/Timer with Auto-Reload mode is selected by clearing the CP/RL2 bit. Setting TR2 to logic 1 enables and starts the timer. Timer 2 can use either the system clock or transitions on an external input pin as its clock source, as specified by the C/T2 bit. If EXEN2 is set to logic 1, a high-to-low transition on T2EX will also cause Timer 2 to be reloaded. If EXEN2 is cleared, transitions on T2EX will be ignored.

Figure 19.12. T2 Mode 1 Block Diagram

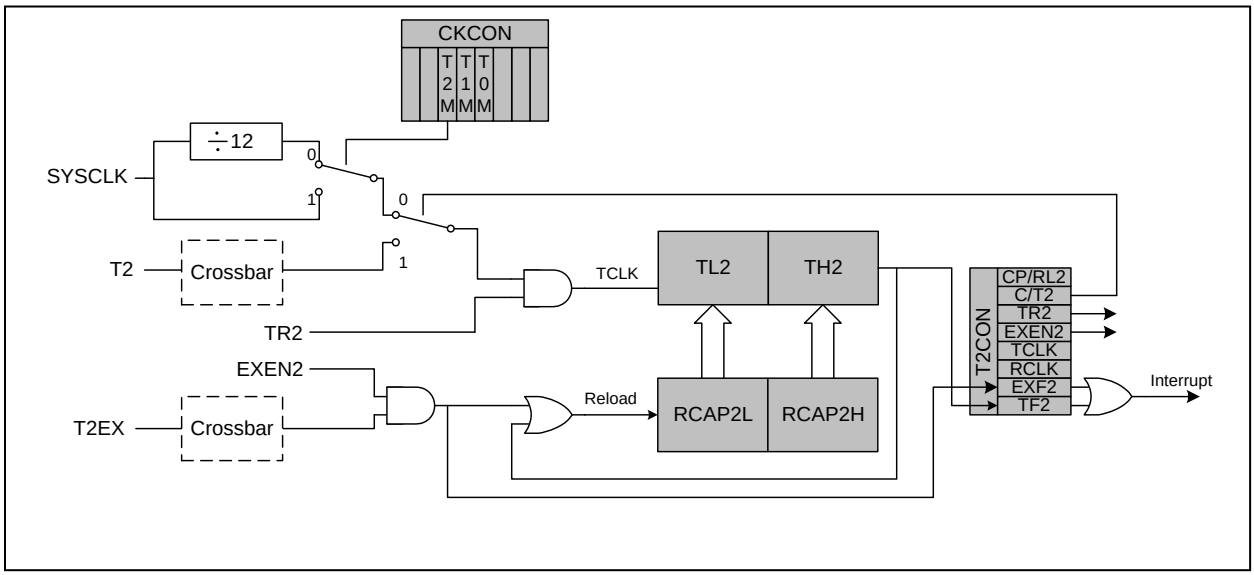

19.2.3. Mode 2: Baud Rate Generator

Timer 2 can be used as a baud rate generator for the serial port (UART) when the UART is operated in modes 1 or 3 (refer to Section 18.1 for more information on UART operational modes). In Baud Rate Generator mode, Timer 2 works similarly to the auto-reload mode. On overflow, the 16-bit value held in the two capture registers (RCAP2H, RCAP2L) is automatically loaded into the counter/timer register. However, the TF2 overflow flag is not set and no interrupt is generated. Instead, the overflow event is used as the input to the UART's shift clock. Timer 2 overflows can be used to generate baud rates for transmit and/or receive independently.

The Baud Rate Generator mode is selected by setting RCLK (T2CON.5) and/or TCLK (T2CON.4) to logic one. When RCLK or TCLK is set to logic 1, Timer 2 operates in the auto-reload mode regardless of the state of the CP/RL2 bit. The baud rate for the UART, when operating in mode 1 or 3, is determined by the Timer 2 overflow rate:

Baud Rate = Timer 2 Overflow Rate / 16.

Note, in all other modes, the timebase for the timer is the system clock divided by one or twelve as selected by the T2M bit in CKCON. However, in Baud Rate Generator mode, the timebase is the system clock divided by two. No other divisor selection is possible. If a different time base is required, setting the C/T2 bit to logic 1 will allow the timebase to be derived from the external input pin T2. In this case, the baud rate for the UART is calculated as:

*Baud Rate = FCLK / [32 * (65536 – [RCAP2H:RCAP2L])]*

Where FCLK is the frequency of the signal supplied to T2 and [RCAP2H:RCAP2L] is the 16-bit value held in the capture registers.

As explained above, in Baud Rate Generator mode, Timer 2 does not set the TF2 overflow flag and therefore cannot generate an interrupt. However, if EXEN2 is set to logic 1, a high-to-low transition on the T2EX input pin will set the EXF2 flag and a Timer 2 interrupt will occur if enabled. Therefore, the T2EX input may be used as an additional external interrupt source.

Figure 19.13. T2 Mode 2 Block Diagram

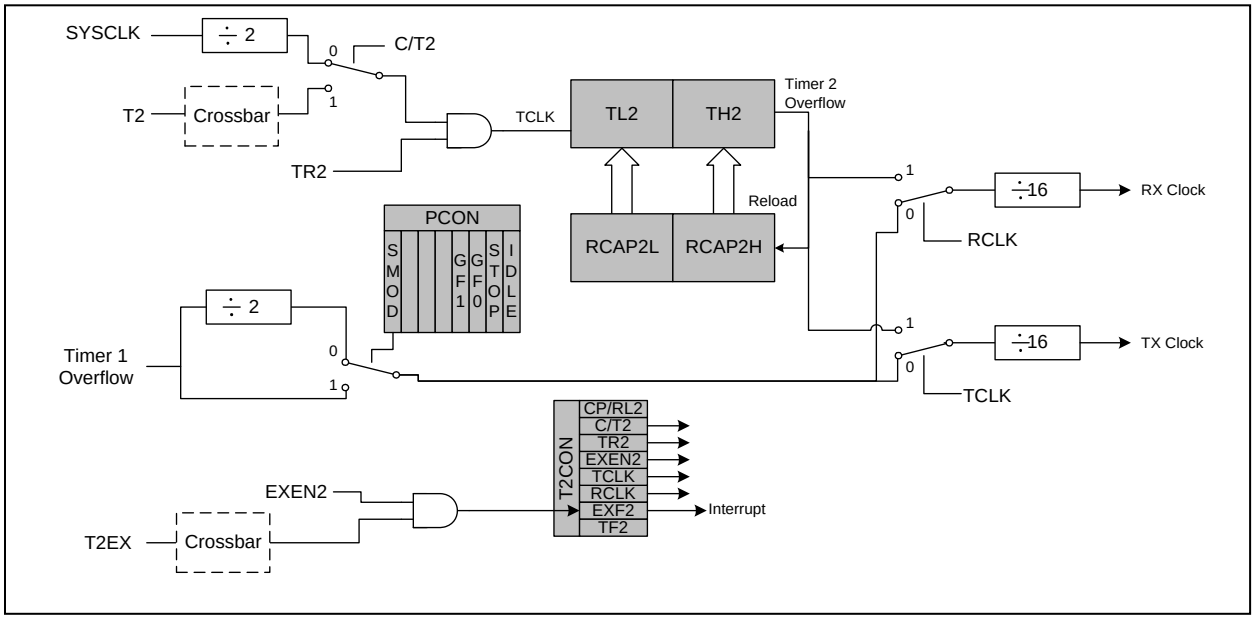

Figure 19.14. T2CON: Timer 2 Control Register

R/W	R/W	R/W	R/W	R/W	R/W	R/W	R/W	Reset Value
TF2	EXF2	RCLK	TCLK	EXEN2	TR2	C/T2	CP/RL2	00000000
Bit7	Bit6	Bit5	Bit4	Bit3	Bit2	Bit1	Bit0 (bit addressable)	SFR Address: 0xC8

Bit7: TF2: Timer 2 Overflow Flag.
Set by hardware when Timer 2 overflows from 0xFFFF to 0x0000 or reload value. When the Timer 2 interrupt is enabled, setting this bit causes the CPU to vector to the Timer 2 interrupt service routine. This bit is not automatically cleared by hardware and must be cleared by software. TF2 will not be set when RCLK and/or TCLK are logic 1.

Bit6: EXF2: Timer 2 External Flag.
Set by hardware when either a capture or reload is caused by a high-to-low transition on the T2EX input pin and EXEN2 is logic 1. When the Timer 2 interrupt is enabled, setting this bit causes the CPU to vector to the Timer 2 Interrupt service routine. This bit is not automatically cleared by hardware and must be cleared by software.

Bit5: RCLK: Receive Clock Flag.
Selects which timer is used for the UART's receive clock in modes 1 or 3.
0: Timer 1 overflows used for receive clock.
1: Timer 2 overflows used for receive clock.

Bit4: TCLK: Transmit Clock Flag.
Selects which timer is used for the UART's transmit clock in modes 1 or 3.
0: Timer 1 overflows used for transmit clock.
1: Timer 2 overflows used for transmit clock.

Bit3: EXEN2: Timer 2 External Enable.
Enables high-to-low transitions on T2EX to trigger captures or reloads when Timer 2 is not operating in Baud Rate Generator mode.
0: High-to-low transitions on T2EX ignored.
1: High-to-low transitions on T2EX cause a capture or reload.

Bit2: TR2: Timer 2 Run Control.
This bit enables/disables Timer 2.
0: Timer 2 disabled.
1: Timer 2 enabled.

Bit1: C/T2: Counter/Timer Select.
0: Timer Function: Timer 2 incremented by clock defined by T2M (CKCON.5).
1: Counter Function: Timer 2 incremented by high-to-low transitions on external input pin (T2).

Bit0: CP/RL2: Capture/Reload Select.
This bit selects whether Timer 2 functions in capture or auto-reload mode. EXEN2 must be logic 1 for high-to-low transitions on T2EX to be recognized and used to trigger captures or reloads. If RCLK or TCLK is set, this bit is ignored and Timer 2 will function in auto-reload mode.
0: Auto-reload on Timer 2 overflow or high-to-low transition at T2EX (EXEN2 = 1).
1: Capture on high-to-low transition at T2EX (EXEN2 = 1).

Figure 19.15. RCAP2L: Timer 2 Capture Register Low Byte

R/W	R/W	R/W	R/W	R/W	R/W	R/W	R/W	Reset Value
								00000000
Bit7	Bit6	Bit5	Bit4	Bit3	Bit2	Bit1	Bit0	SFR Address: 0xCA

Bits 7-0: RCAP2L: Timer 2 Capture Register Low Byte.
The RCAP2L register captures the low byte of Timer 2 when Timer 2 is configured in capture mode. When Timer 2 is configured in auto-reload mode, it holds the low byte of the reload value.

Figure 19.16. RCAP2H: Timer 2 Capture Register High Byte

R/W	R/W	R/W	R/W	R/W	R/W	R/W	R/W	Reset Value
								00000000
Bit7	Bit6	Bit5	Bit4	Bit3	Bit2	Bit1	Bit0	SFR Address: 0xCB

Bits 7-0: RCAP2H: Timer 2 Capture Register High Byte.
The RCAP2H register captures the high byte of Timer 2 when Timer 2 is configured in capture mode. When Timer 2 is configured in auto-reload mode, it holds the high byte of the reload value.

Figure 19.17. TL2: Timer 2 Low Byte

R/W	R/W	R/W	R/W	R/W	R/W	R/W	R/W	Reset Value
								00000000
Bit7	Bit6	Bit5	Bit4	Bit3	Bit2	Bit1	Bit0	SFR Address: 0xCC

Bits 7-0: TL2: Timer 2 Low Byte.
The TL2 register contains the low byte of the 16-bit Timer 2.

Figure 19.18. TH2: Timer 2 High Byte

R/W	R/W	R/W	R/W	R/W	R/W	R/W	R/W	Reset Value
								00000000
Bit7	Bit6	Bit5	Bit4	Bit3	Bit2	Bit1	Bit0	SFR Address: 0xCD

Bits 7-0: TH2: Timer 2 High Byte.
The TH2 register contains the high byte of the 16-bit Timer 2.

19.3. Timer 3

Timer 3 is a 16-bit timer formed by the two 8-bit SFRs, TMR3L (low byte) and TMR3H (high byte). The input for Timer 3 is the system clock (divided by either one or twelve as specified by the Timer 3 Clock Select bit T3M in the Timer 3 Control Register TMR3CN). Timer 3 is always configured as an auto-reload timer, with the reload value held in the TMR3RLL (low byte) and TMR3RLH (high byte) registers. Timer 3 can be used to start an ADC Data Conversion, for SMBus timing (see Section 16.5), or as a general-purpose timer. Timer 3 does not have a counter mode.

Figure 19.19. Timer 3 Block Diagram

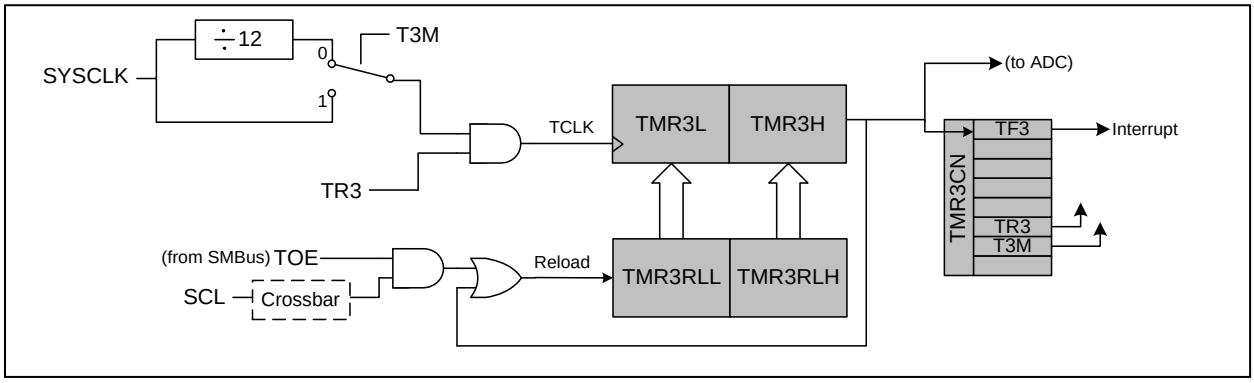

Figure 19.20. TMR3CN: Timer 3 Control Register

R/W	R/W	R/W	R/W	R/W	R/W	R/W	R/W	Reset Value
TF3	-	-	-	-	TR3	T3M	-	00000000
Bit7	Bit6	Bit5	Bit4	Bit3	Bit2	Bit1	Bit0	SFR Address: 0x91

Bit7: TF3: Timer3 Overflow Flag.
Set by hardware when Timer 3 overflows from 0xFFFF to 0x0000. When the Timer 3 interrupt is enabled, setting this bit causes the CPU to vector to the Timer 3 Interrupt service routine. This bit is not automatically cleared by hardware and must be cleared by software.

Bits6-3: UNUSED. Read = 0000b, Write = don't care.

Bit2: TR3: Timer 3 Run Control.
This bit enables/disables Timer 3.
0: Timer 3 disabled.
1: Timer 3 enabled.

Bit1: T3M: Timer 3 Clock Select.
This bit controls the division of the system clock supplied to Counter/Timer 3.
0: Counter/Timer 3 uses the system clock divided by 12.
1: Counter/Timer 3 uses the system clock.

Bit0: UNUSED. Read = 0, Write = don't care.

Figure 19.21. TMR3RLL: Timer 3 Reload Register Low Byte

R/W	R/W	R/W	R/W	R/W	R/W	R/W	R/W	Reset Value
								00000000
Bit7	Bit6	Bit5	Bit4	Bit3	Bit2	Bit1	Bit0	SFR Address: 0x92

Bits 7-0: TMR3RLL: Timer 3 Reload Register Low Byte.
Timer 3 is configured as an auto-reload timer. This register holds the low byte of the reload value.

Figure 19.22. TMR3RLH: Timer 3 Reload Register High Byte

R/W	R/W	R/W	R/W	R/W	R/W	R/W	R/W	Reset Value
								00000000
Bit7	Bit6	Bit5	Bit4	Bit3	Bit2	Bit1	Bit0	SFR Address: 0x93

Bits 7-0: TMR3RLH: Timer 3 Reload Register High Byte.
Timer 3 is configured as an auto-reload timer. This register holds the high byte of the reload value.

Figure 19.23. TMR3L: Timer 3 Low Byte

R/W	R/W	R/W	R/W	R/W	R/W	R/W	R/W	Reset Value
								00000000
Bit7	Bit6	Bit5	Bit4	Bit3	Bit2	Bit1	Bit0	SFR Address: 0x94

Bits 7-0: TMR3L: Timer 3 Low Byte.
The TMR3L register is the low byte of Timer 3.

Figure 19.24. TMR3H: Timer 3 High Byte

R/W	R/W	R/W	R/W	R/W	R/W	R/W	R/W	Reset Value
								00000000
Bit7	Bit6	Bit5	Bit4	Bit3	Bit2	Bit1	Bit0	SFR Address: 0x95

Bits 7-0: TMR3H: Timer 3 High Byte.
The TMR3H register is the high byte of Timer 3.

20. PROGRAMMABLE COUNTER ARRAY

The Programmable Counter Array (PCA) provides enhanced timer functionality while requiring less CPU intervention than the standard 8051 counter/timers. The PCA consists of a dedicated 16-bit counter/timer and five 16-bit capture/compare modules. Each capture/compare module has its own associated I/O line (CEXn) which is routed through the Crossbar to Port I/O when enabled (see Section 15.1 for details on configuring the Crossbar). The counter/timer is driven by a configurable timebase that can select between four inputs as its source: system clock divided by twelve, system clock divided by four, Timer 0 overflow, or an external clock signal on the ECI line. The PCA is configured and controlled through the system controller's Special Function Registers. The basic PCA block diagram is shown in Figure 20.1.

Figure 20.1. PCA Block Diagram

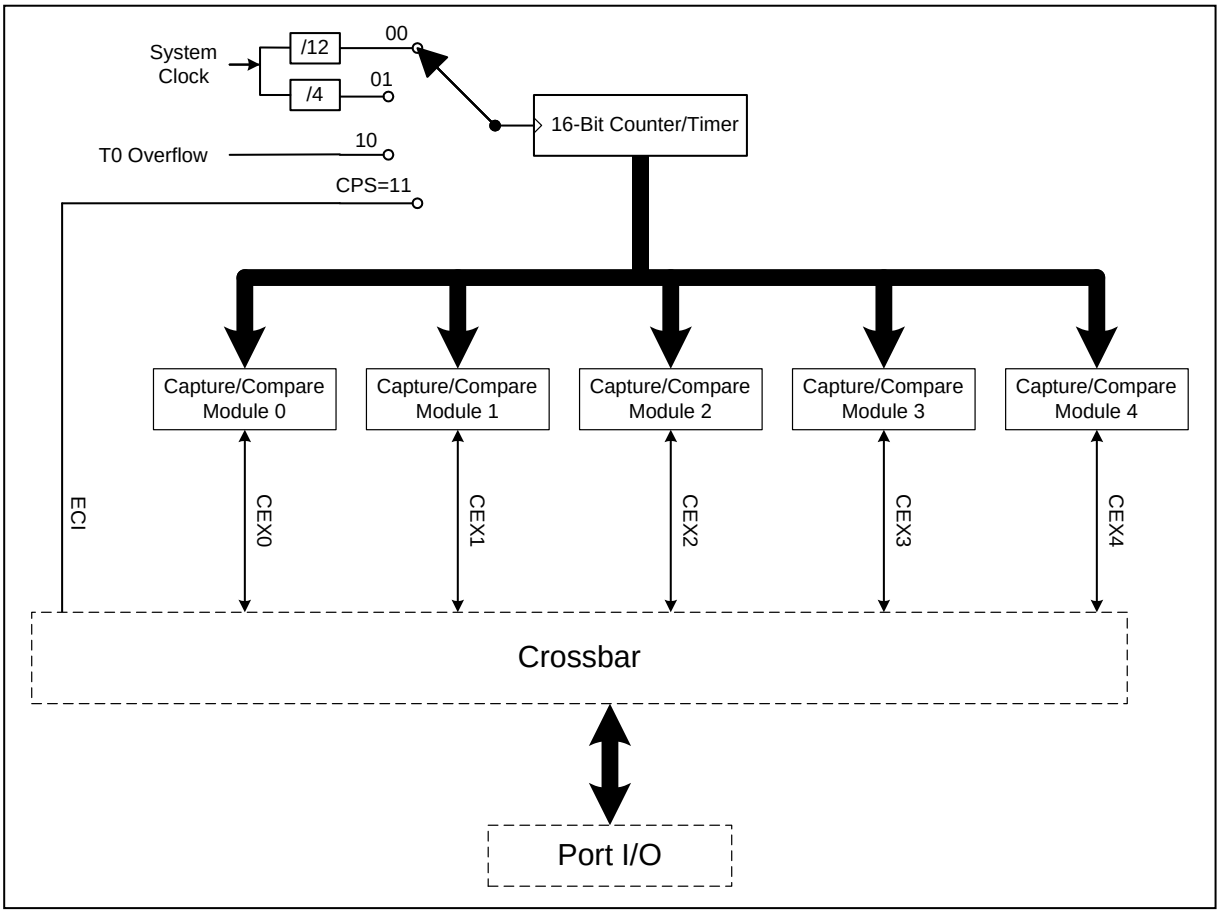

20.1. Capture/Compare Modules

Each module can be configured to operate independently in one of four operation modes: Edge-triggered Capture, Software Timer, High Speed Output, or Pulse Width Modulator. Each module has Special Function Registers (SFRs) associated with it in the CIP-51 system controller. These registers are used to exchange data with a module and configure the module's mode of operation.

Table 20.1 summarizes the bit settings in the PCA0CPMn registers used to place the PCA capture/compare modules into different operating modes. Setting the ECCFn bit in a PCA0CPMn register enables the module's CCFn interrupt. Note: PCA0 interrupts must be globally enabled before individual CCFn interrupts are recognized. PCA0 interrupts are globally enabled by setting the EA bit (IE.7) and the EPCA0 bit (EIE1.3) to logic 1. See Figure 20.2 for details on the PCA interrupt configuration.

Table 20.1. PCA0CPM Register Settings for PCA Capture/Compare Modules

ECOM	CAPP	CAPN	MAT	TOG	PWM	ECCF	Operation Mode
X	1	0	0	0	0	X	Capture triggered by positive edge on CEXn
X	0	1	0	0	0	X	Capture triggered by negative edge on CEXn
X	1	1	0	0	0	X	Capture triggered by transition on CEXn
1	0	0	1	0	0	X	Software Timer
1	0	0	1	1	0	X	High Speed Output
1	0	0	X	0	1	X	Pulse Width Modulator

X = Don't Care

Figure 20.2. PCA Interrupt Block Diagram

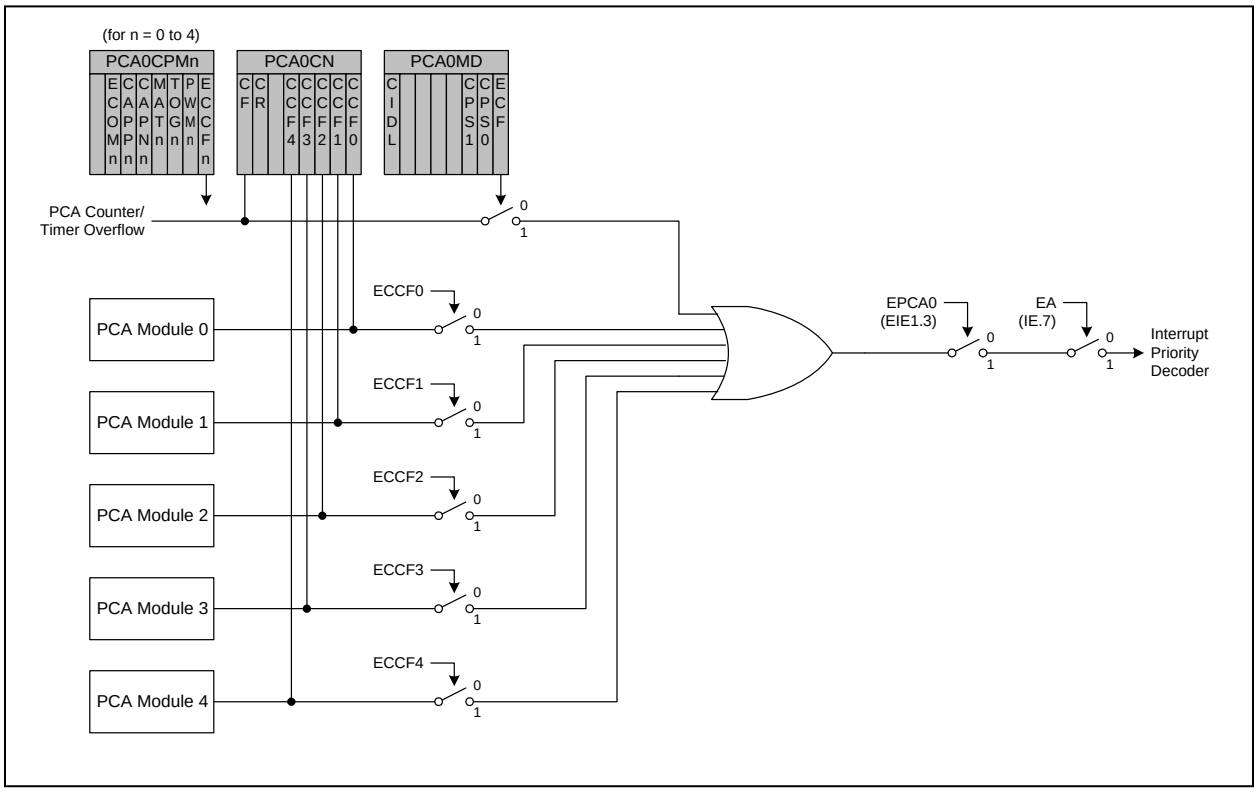

20.1.1. Edge-triggered Capture Mode

In this mode, a valid transition on the CEXn pin causes the PCA to capture the value of the PCA counter/timer and load it into the corresponding module's 16-bit capture/compare register (PCA0CPLn and PCA0CPHn). The CAPPn and CAPNn bits in the PCA0CPMn register are used to select the type of transition that triggers the capture: low-to-high transition (positive edge), high-to-low transition (negative edge), or either transition (positive or negative edge). When a capture occurs, the Capture/Compare Flag (CCFn) in PCA0CN is set to logic 1 and an interrupt request is generated if CCF interrupts are enabled. The CCFn bit is not automatically cleared by hardware when the CPU vectors to the interrupt service routine, and must be cleared by software.

Figure 20.3. PCA Capture Mode Diagram

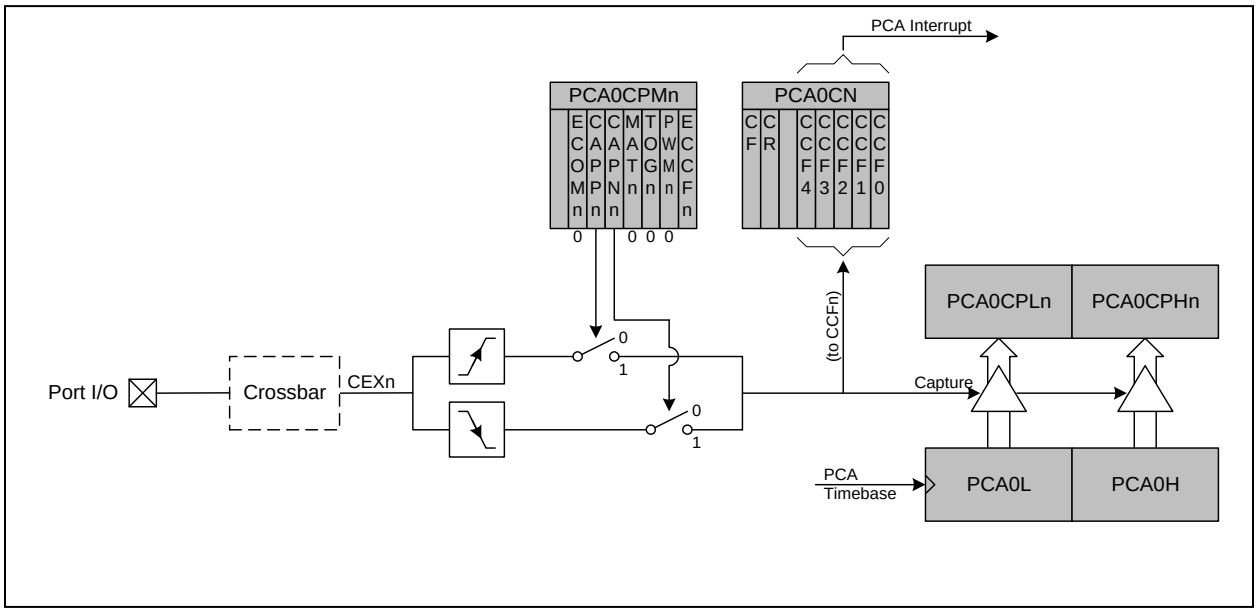

20.1.2. Software Timer (Compare) Mode

In Software Timer mode, the PCA counter/timer is compared to the module's 16-bit capture/compare register (PCA0CPHn and PCA0CPLn). When a match occurs, the Capture/Compare Flag (CCFn) in PCA0CN is set to logic 1 and an interrupt request is generated if CCF interrupts are enabled. The CCFn bit is not automatically cleared by hardware when the CPU vectors to the interrupt service routine, and must be cleared by software. Setting the ECOMn and MATn bits in the PCA0CPMn register enables Software Timer mode.

Figure 20.4. PCA Software Timer Mode Diagram

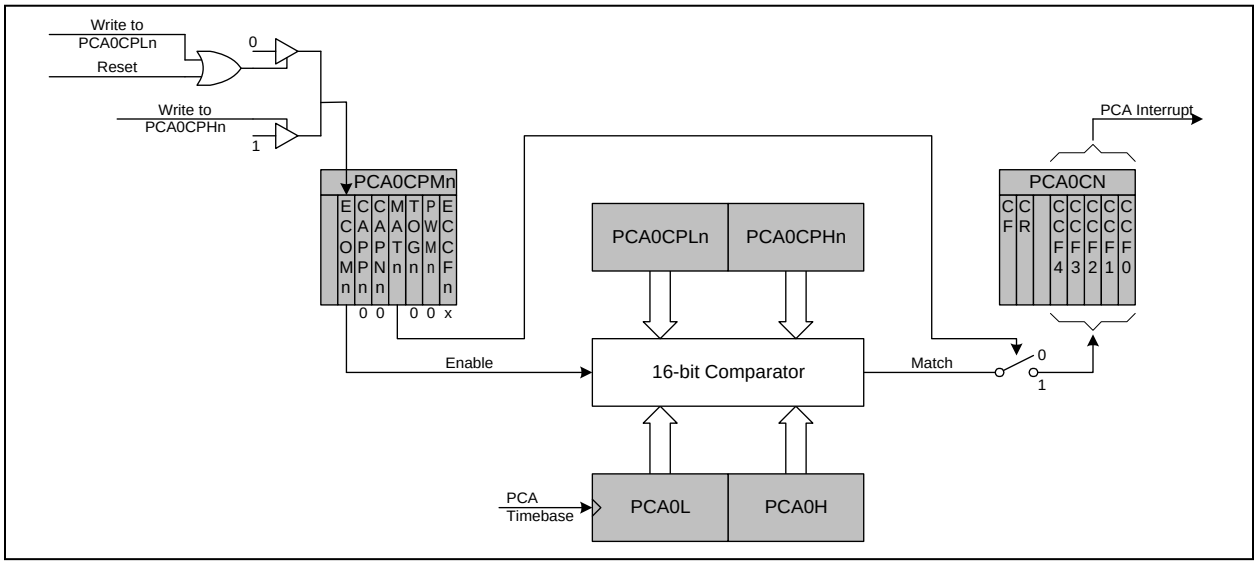

20.1.3. High Speed Output Mode

In this mode, each time a match occurs between the PCA Timer Counter and a module's 16-bit capture/compare register (PCA0CPHn and PCA0CPLn) the logic level on the module's associated CEXn pin will toggle. Setting the TOGn, MATn, and ECOMn bits in the PCA0CPMn register enables the High-Speed Output mode.

Figure 20.5. PCA High Speed Output Mode Diagram

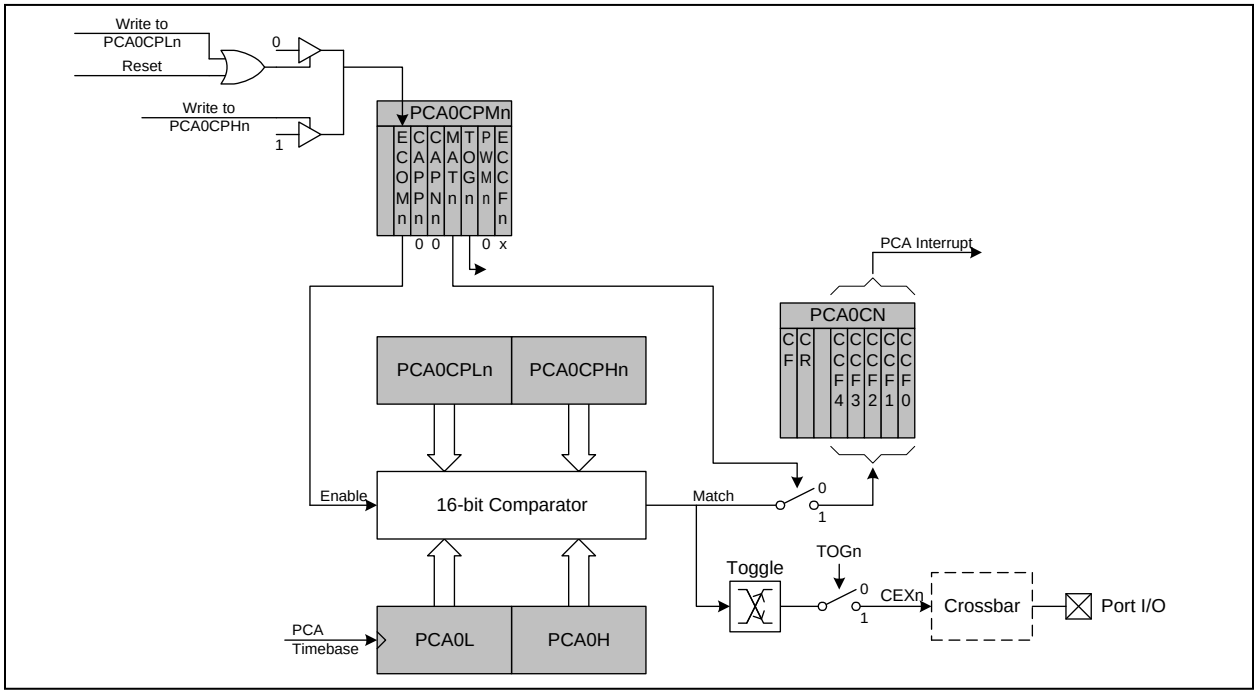

20.1.4. Pulse Width Modulator Mode

All of the modules can be used independently to generate pulse width modulated (PWM) outputs on their respective CEXn pin. The frequency of the output is dependent on the timebase for the PCA counter/timer. The duty cycle of the PWM output signal is varied using the module's PCA0CPLn capture/compare register. When the value in the low byte of the PCA counter/timer (PCA0L) is equal to the value in PCA0CPLn, the output on the CEXn pin will be set. When the count value in PCA0L overflows, the CEXn output will be reset (see Figure 20.6). Also, when the counter/timer low byte (PCA0L) overflows from 0xFF to 0x00, PCA0CPLn is reloaded automatically with the value stored in the PCA0CPHn without software intervention. It is good practice to write to PCA0CPHn instead of PCA0CPLn to avoid glitches in the digital comparator. Setting the ECOMn and PWMn bits in the PCA0CPMn register enables Pulse Width Modulator mode.

Figure 20.6. PCA PWM Mode Diagram

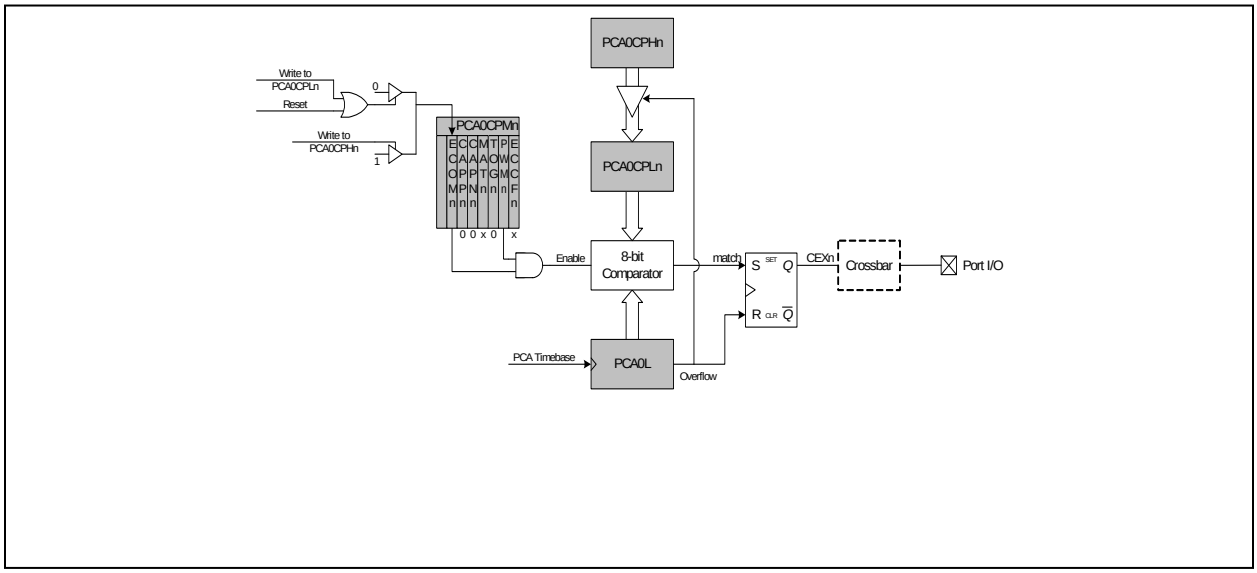

20.2. PCA Counter/Timer

The 16-bit PCA counter/timer consists of two 8-bit SFRs: PCA0L and PCA0H. PCA0H is the high byte (MSB) of the 16-bit counter/timer and PCA0L is the low byte (LSB). Reading PCA0L automatically latches the value of PCA0H at the same time. By reading the PCA0L Register first, this allows the PCA0H value to be held (at the time PCA0L was read) until the user reads the PCA0H Register. Reading PCA0H or PCA0L does not disturb the counter operation. The CPS1 and CPS0 bits in the PCA0MD register select the timebase for the counter/timer as shown in Table 20.2.

When the counter/timer overflows from 0xFFFF to 0x0000, the Counter Overflow Flag (CF) in PCA0MD is set to logic 1 and an interrupt request is generated if CF interrupts are enabled. Setting the ECF bit in PCA0MD to logic 1 enables the CF flag to generate an interrupt request. The CF bit is not automatically cleared by hardware when the CPU vectors to the interrupt service routine, and must be cleared by software. (Note: PCA0 interrupts must be globally enabled before CF interrupts are recognized. PCA0 interrupts are globally enabled by setting the EA bit (IE.7) and the EPCA0 bit in EIE1 to logic 1.) Clearing the CIDL bit in the PCA0MD register allows the PCA to continue normal operation while the microcontroller core is in Idle mode.

Table 20.2. PCA Timebase Input Options

CPS1	CPS0	Timebase
0	0	System clock divided by 12
0	1	System clock divided by 4
1	0	Timer 0 overflow
1	1	High-to-low transitions on ECI (max rate = system clock divided by 4)

Figure 20.7. PCA Counter/Timer Block Diagram

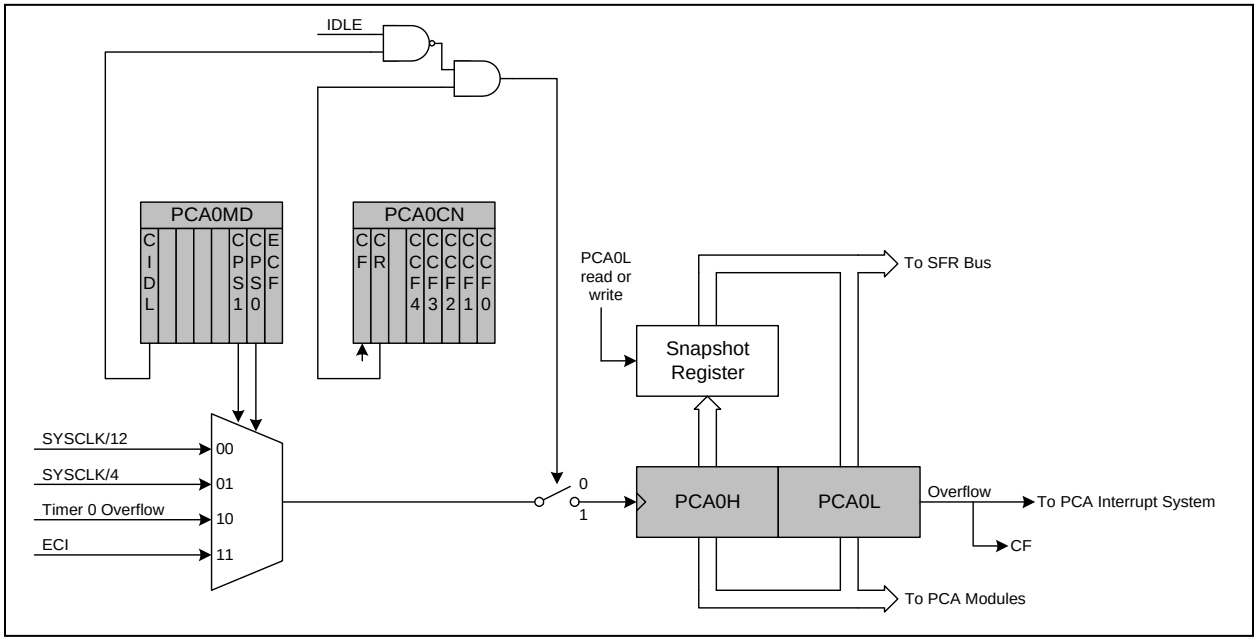

20.3. Register Descriptions for PCA

The system device may implement one or more Programmable Counter Arrays. Following are detailed descriptions of the special function registers related to the operation of the PCA. The CIP-51 System Controller section of the datasheet provides additional information on the SFRs and their use.

Figure 20.8. PCA0CN: PCA Control Register

R/W	R/W	R/W	R/W	R/W	R/W	R/W	R/W	Reset Value
CF	CR	-	CCF4	CCF3	CCF2	CCF1	CCF0	00000000
Bit7	Bit6	Bit5	Bit4	Bit3	Bit2	Bit1	Bit0 (bit addressable)	SFR Address: 0xD8

Bit7: CF: PCA Counter/Timer Overflow Flag.
Set by hardware when the PCA Counter/Timer overflows from 0xFFFF to 0x0000. When the Counter/Timer Overflow (CF) interrupt is enabled, setting this bit causes the CPU to vector to the CF interrupt service routine. This bit is not automatically cleared by hardware and must be cleared by software.

Bit6: CR: PCA Counter/Timer Run Control.
This bit enables/disables the PCA Counter/Timer.
0: PCA Counter/Timer disabled.
1: PCA Counter/Timer enabled.

Bit5: UNUSED. Read = 0, Write = don't care.

Bit4: CCF4: PCA Module 4 Capture/Compare Flag.
This bit is set by hardware when a match or capture occurs. When the CCF interrupt is enabled, setting this bit causes the CPU to vector to the CCF interrupt service routine. This bit is not automatically cleared by hardware and must be cleared by software.

Bit3: CCF3: PCA Module 3 Capture/Compare Flag.
This bit is set by hardware when a match or capture occurs. When the CCF interrupt is enabled, setting this bit causes the CPU to vector to the CCF interrupt service routine. This bit is not automatically cleared by hardware and must be cleared by software.

Bit2: CCF2: PCA Module 2 Capture/Compare Flag.
This bit is set by hardware when a match or capture occurs. When the CCF interrupt is enabled, setting this bit causes the CPU to vector to the CCF interrupt service routine. This bit is not automatically cleared by hardware and must be cleared by software.

Bit1: CCF1: PCA Module 1 Capture/Compare Flag.
This bit is set by hardware when a match or capture occurs. When the CCF interrupt is enabled, setting this bit causes the CPU to vector to the CCF interrupt service routine. This bit is not automatically cleared by hardware and must be cleared by software.

Bit0: CCF0: PCA Module 0 Capture/Compare Flag.
This bit is set by hardware when a match or capture occurs. When the CCF interrupt is enabled, setting this bit causes the CPU to vector to the CCF interrupt service routine. This bit is not automatically cleared by hardware and must be cleared by software.

Figure 20.9. PCA0MD: PCA Mode Register

R/W	R/W	R/W	R/W	R/W	R/W	R/W	R/W	Reset Value
CIDL	-	-	-	-	CPS1	CPS0	ECF	00000000
Bit7	Bit6	Bit5	Bit4	Bit3	Bit2	Bit1	Bit0	SFR Address: 0xD9

Bit7: CIDL: PCA Counter/Timer Idle Control.
Specifies PCA behavior when CPU is in Idle Mode.
0: PCA continues to function normally while the system controller is in Idle Mode.
1: PCA operation is suspended while the system controller is in Idle Mode.

Bits6-3: UNUSED. Read = 0000b, Write = don't care.

Bits2-1: CPS1-CPS0: PCA Counter/Timer Pulse Select.
These bits select the timebase source for the PCA counter.

CPS1	CPS0	Timebase
0	0	System clock divided by 12
0	1	System clock divided by 4
1	0	Timer 0 overflow
1	1	High-to-low transitions on ECI (max rate = system clock divided by 4)

Bit0: ECF: PCA Counter/Timer Overflow Interrupt Enable.
This bit sets the masking of the PCA Counter/Timer Overflow (CF) interrupt.
0: Disable the CF interrupt.
1: Enable a PCA Counter/Timer Overflow interrupt request when CF (PCA0CN.7) is set.

Figure 20.10. PCA0CPMn: PCA Capture/Compare Registers

R/W	R/W	R/W	R/W	R/W	R/W	R/W	R/W	Reset Value
-	ECOMn	CAPPn	CAPNn	MATn	TOGn	PWMn	ECCFn	00000000
Bit7	Bit6	Bit5	Bit4	Bit3	Bit2	Bit1	Bit0	SFR Address: 0xDA-0xDE

PCA0CPMn Address: PCA0CPM0 = 0xDA (n = 0)
PCA0CPM1 = 0xDB (n = 1)
PCA0CPM2 = 0xDC (n = 2)
PCA0CPM3 = 0xDD (n = 3)
PCA0CPM4 = 0xDE (n = 4)

Bit7: UNUSED. Read = 0, Write = don't care.

Bit6: ECOMn: Comparator Function Enable.
This bit enables/disables the comparator function for PCA module *n*.
0: Disabled.
1: Enabled.

Bit5: CAPPn: Capture Positive Function Enable.
This bit enables/disables the positive edge capture for PCA module *n*.
0: Disabled.
1: Enabled.

Bit4: CAPNn: Capture Negative Function Enable.
This bit enables/disables the negative edge capture for PCA module *n*.
0: Disabled.
1: Enabled.

Bit3: MATn: Match Function Enable.
This bit enables/disables the match function for PCA module *n*. When enabled, matches of the PCA counter with a module's capture/compare register cause the CCFn bit in PCA0MD register to be set.
0: Disabled.
1: Enabled.

Bit2: TOGn: Toggle Function Enable.
This bit enables/disables the toggle function for PCA module *n*. When enabled, matches of the PCA counter with a module's capture/compare register cause the logic level on the CEXn pin to toggle.
0: Disabled.
1: Enabled.

Bit1: PWMn: Pulse Width Modulation Mode Enable.
This bit enables/disables the comparator function for PCA module *n*. When enabled, a pulse width modulated signal is output on the CEXn pin.
0: Disabled.
1: Enabled.

Bit0: ECCFn: Capture/Compare Flag Interrupt Enable.
This bit sets the masking of the Capture/Compare Flag (CCFn) interrupt.
0: Disable CCFn interrupts.
1: Enable a Capture/Compare Flag interrupt request when CCFn is set.

Figure 20.11. PCA0L: PCA Counter/Timer Low Byte

R/W	R/W	R/W	R/W	R/W	R/W	R/W	R/W	Reset Value
								00000000
Bit7	Bit6	Bit5	Bit4	Bit3	Bit2	Bit1	Bit0	SFR Address: 0xE9

Bits 7-0: PCA0L: PCA Counter/Timer Low Byte.
The PCA0L register holds the low byte (LSB) of the 16-bit PCA Counter/Timer.

Figure 20.12. PCA0H: PCA Counter/Timer High Byte

R/W	R/W	R/W	R/W	R/W	R/W	R/W	R/W	Reset Value
								00000000
Bit7	Bit6	Bit5	Bit4	Bit3	Bit2	Bit1	Bit0	SFR Address: 0xF9

Bits 7-0: PCA0H: PCA Counter/Timer High Byte.
The PCA0H register holds the high byte (MSB) of the 16-bit PCA Counter/Timer. Note the value read is actually from the snapshot register in order to synchronize it with PCA0L.

Figure 20.13. PCA0CPLn: PCA Capture Module Low Byte

R/W	R/W	R/W	R/W	R/W	R/W	R/W	R/W	Reset Value
								00000000
Bit7	Bit6	Bit5	Bit4	Bit3	Bit2	Bit1	Bit0	SFR Address: 0xEA-0xEE

PCA0CPLn Address: PCA0CPL0 = 0xEA (n = 0)
PCA0CPL1 = 0xEB (n = 1)
PCA0CPL2 = 0xEC (n = 2)
PCA0CPL3 = 0xED (n = 3)
PCA0CPL4 = 0xEE (n = 4)

Bits7-6: PCA0CPLn: PCA Capture Module Low Byte.
The PCA0CPLn register holds the low byte (LSB) of the 16-bit capture module *n*.

Figure 20.14. PCA0CPHn: PCA Capture Module High Byte

R/W	R/W	R/W	R/W	R/W	R/W	R/W	R/W	Reset Value
								00000000
Bit7	Bit6	Bit5	Bit4	Bit3	Bit2	Bit1	Bit0	SFR Address: 0xFA-0xFE

PCA0CPHn Address: PCA0CPH0 = 0xFA (n = 0)
PCA0CPH1 = 0xFB (n = 1)
PCA0CPH2 = 0xFC (n = 2)
PCA0CPH3 = 0xFD (n = 3)
PCA0CPH4 = 0xFE (n = 4)

Bits7-0: PCA0CPHn: PCA Capture Module High Byte.
The PCA0CPHn register holds the high byte (MSB) of the 16-bit capture module n.

21. JTAG (IEEE 1149.1)

Each MCU has an on-chip JTAG interface and logic to support boundary scan for production and in-system testing, Flash read and write operations, and non-intrusive in-circuit debug. The JTAG interface is fully compliant with the IEEE 1149.1 specification. Refer to this specification for detailed descriptions of the Test Interface and Boundary-Scan Architecture. Access of the JTAG Instruction Register (IR) and Data Registers (DR) are as described in the Test Access Port and Operation of the IEEE 1149.1 specification.

The JTAG interface is via four dedicated pins on the MCU, which are TCK, TMS, TDI, and TDO. These pins are all 5V tolerant.

Through the 16-bit JTAG Instruction Register (IR), any of the eight instructions shown in Figure 21.1 can be commanded. There are three Data Registers (DR's) associated with JTAG Boundary-Scan, and four associated with Flash read/write operations on the MCU.

Figure 21.1. IR: JTAG Instruction Register

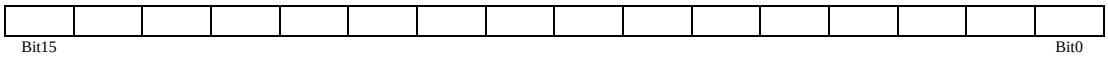

Reset Value
0x0004

IR value	Instruction	Description
0x0000	EXTEST	Selects the Boundary Data Register for control and observability of all device pins
0x0002	SAMPLE/ PRELOAD	Selects the Boundary Data Register for observability and presetting the scan-path latches
0x0004	IDCODE	Selects device ID Register
0xFFFF	BYPASS	Selects Bypass Data Register
0x0082	Flash Control	Selects FLASHCON Register to control how the interface logic responds to reads and writes to the FLASHDAT Register
0x0083	Flash Data	Selects FLASHDAT Register for reads and writes to the Flash memory
0x0084	Flash Address	Selects FLASHADR Register which holds the address of all Flash read, write, and erase operations
0x0085	Flash Scale	Selects FLASHSCL Register which controls the prescaler used to generate timing signals for Flash operations

21.1. Boundary Scan

The Data Register in the Boundary Scan path is an 87-bit shift register. The Boundary DR provides control and observability of all the device pins as well as the SFR bus and Weak Pullup feature via the EXTEST and SAMPLE commands.

Table 21.1. Boundary Data Register Bit Definitions

EXTEST provides access to both capture and update actions, while Sample only performs a capture.

Bit	Action	Target
0	Capture	Reset Enable from MCU
	Update	Reset Enable to /RST pin
1	Capture	Reset input from /RST pin
	Update	Reset output to /RST pin
2	Capture	External Clock from XTAL1 pin
	Update	Not used
3	Capture	Weak pullup enable from MCU
	Update	Weak pullup enable to Port Pins
4-11	Capture	SFR Address Bus bit from CIP-51 (e.g. Bit4=SFRA0, Bit5=SFRA1…)
	Update	SFR Address Bus bit to SFR Address Bus (e.g. Bit4=XSFRA0, Bit5=XSFRA1)
12-19	Capture	SFR Data Bus bit read from SFR (e.g. Bit12=SFRD0, Bit13=SFRD1…)
	Update	SFR Data Bus bit written to SFR (e.g. Bit12=SFRD0, Bit13=SFRD1…)
20	Capture	SFR Write Strobe from CIP-51
	Update	SFR Write Strobe to SFR Bus
21	Capture	SFR Read Strobe from CIP-51
	Update	SFR Read Strobe to SFR Bus
22	Capture	SFR Read/Modify/Write Strobe from CIP-51
	Update	SFR Read/Modify/Write Strobe to SFR Bus
23,25,27,29, 31,33,35,37	Capture	P0.n output enable from MCU (e.g. Bit23=P0.0, Bit25=P0.1, etc.)
	Update	P0.n output enable to pin (e.g. Bit23=P0.0oe, Bit25=P0.1oe, etc.)
24,26,28,30, 32,34,36,38	Capture	P0.n input from pin (e.g. Bit24=P0.0, Bit26=P0.1, etc.)
	Update	P0.n output to pin (e.g. Bit24=P0.0, Bit26=P0.1, etc.)
39,41,43,45, 47,49,51,53	Capture	P1.n output enable from MCU (e.g. Bit39=P1.0, Bit41=P1.1, etc.)
	Update	P1.n output enable to pin (e.g. Bit39=P1.0oe, Bit41=P1.1oe, etc.)
40,42,44,46, 48,50,52,54	Capture	P1.n input from pin (e.g. Bit40=P1.0, Bit42=P1.1, etc.)
	Update	P1.n output to pin (e.g. Bit40=P1.0, Bit42=P1.1, etc.)
55,57,59,61, 63,65,67,69	Capture	P2.n output enable from MCU (e.g. Bit55=P2.0, Bit57=P2.1, etc.)
	Update	P2.n output enable to pin (e.g. Bit55=P2.0oe, Bit57=P2.1oe, etc.)
56,58,60,62, 64,66,68,70	Capture	P2.n input from pin (e.g. Bit56=P2.0, Bit58=P2.1, etc.)
	Update	P2.n output to pin (e.g. Bit56=P2.0, Bit58=P2.1, etc.)
71,73,75,77, 79,81,83,85	Capture	P3.n output enable from MCU (e.g. Bit71=P3.0, Bit73=P3.1, etc.)
	Update	P3.n output enable to pin (e.g. Bit71=P3.0oe, Bit73=P3.1oe, etc.)
72,74,76,78, 80,82,84,86	Capture	P3.n input from pin (e.g. Bit72=P3.0, Bit74=P3.1, etc.)
	Update	P3.n output to pin (e.g. Bit72=P3.0, Bit74=P3.1, etc.)

21.1.1. EXTEST Instruction

The EXTEST instruction is accessed via the IR. The Boundary DR provides control and observability of all the device pins as well as the SFR bus and Weak Pullup feature. All inputs to on-chip logic are set to one.

21.1.2. SAMPLE Instruction

The SAMPLE instruction is accessed via the IR. The Boundary DR provides observability and presetting of the scan-path latches.

21.1.3. BYPASS Instruction

The BYPASS instruction is accessed via the IR. It provides access to the standard 1-bit JTAG Bypass data register.

21.1.4. IDCODE Instruction

The IDCODE instruction is accessed via the IR. It provides access to the 32-bit Device ID register.

Figure 21.2. DEVICEID: JTAG Device ID Register

Version	Part Number	Manufacturer ID	1	Reset Value (Varies)
Bit31 Bit28	Bit27 Bit12	Bit11 Bit1	Bit0	

Version = 0000b (Revision A) or
= 0001b (Revision B)

Part Number = 0000 0000 0000 0000b or
= 0000 0000 0000 0010b

Manufacturer ID = 0010 0100 001b (Silicon Laboratories)

21.2. Flash Programming Commands

The Flash memory can be programmed directly over the JTAG interface using the Flash Control, Flash Data, Flash Address, and Flash Scale registers. These Indirect Data Registers are accessed via the JTAG Instruction Register. Read and write operations on indirect data registers are performed by first setting the appropriate DR address in the IR register. Each read or write is then initiated by writing the appropriate Indirect Operation Code (IndOpCode) to the selected data register. Incoming commands to this register have the following format:

19:18	17:0
IndOpCode	WriteData

IndOpCode: These bit set the operation to perform according to the following table:

IndOpCode	Operation
0x	Poll
10	Read
11	Write

The Poll operation is used to check the Busy bit as described below. Although a Capture-DR is performed, no Update-DR is allowed for the Poll operation. Since updates are disabled, polling can be accomplished by shifting in/out a single bit.

The Read operation initiates a read from the register addressed by the IR. Reads can be initiated by shifting only 2 bits into the indirect register. After the read operation is initiated, polling of the Busy bit must be performed to determine when the operation is complete.

The write operation initiates a write of WriteData to the register addressed by the IR. Registers of any width up to 18 bits can be written. If the register to be written contains fewer than 18 bits, the data in WriteData should be left-justified, i.e. its MSB should occupy bit 17 above. This allows shorter registers to be written in fewer JTAG clock cycles. For example, an 8-bit register could be written by shifting only 10 bits. After a Write is initiated, the Busy bit should be polled to determine when the next operation can be initiated. The contents of the Instruction Register should not be altered while either a read or write operation is in progress.

Outgoing data from the indirect Data Register has the following format:

19	18:1	0
0	ReadData	Busy

The Busy bit indicates that the current operation is not complete. It goes high when an operation is initiated and returns low when complete. Read and Write commands are ignored while Busy is high. In fact, if polling for Busy to be low will be followed by another read or write operation, JTAG writes of the next operation can be made while checking for Busy to be low. They will be ignored until Busy is read low, at which time the new operation will initiate. This bit is placed at bit 0 to allow polling by single-bit shifts. When waiting for a Read to complete and Busy is 0, the following 18 bits can be shifted out to obtain the resulting data. ReadData is always right-justified. This allows registers shorter than 18 bits to be read using a reduced number of shifts. For example, the result from a byte-read requires 9 bit shifts (Busy + 8 bits).

Figure 21.3. FLASHCON: JTAG Flash Control Register

WRMD3	WRMD2	WRMD1	WRMD0	RDMD3	RDMD2	RDMD1	RDMD0	Reset Value
Bit7	Bit6	Bit5	Bit4	Bit3	Bit2	Bit1	Bit0	00000000

This register determines how the Flash interface logic will respond to reads and writes to the FLASHDAT Register.

Bits7-4: WRMD3-0: Write Mode Select Bits.
The Write Mode Select Bits control how the interface logic responds to writes to the FLASHDAT Register per the following values:
0000: A FLASHDAT write replaces the data in the FLASHDAT register, but is otherwise ignored.
0001: A FLASHDAT write initiates a write of FLASHDAT into the memory location addressed by the FLASHADR register. FLASHADR is incremented by one when complete.
0010: A FLASHDAT write initiates an erasure (sets all bytes to 0xFF) of the Flash page containing the address in FLASHADR. FLASHDAT must be 0xA5 for the erase to occur. FLASHADR is not affected. If FLASHADR = 0x7DFE – 0x7DFF, the entire user space will be erased (i.e. entire Flash memory except for Reserved area 0x7E00 – 0x7FFF).
(All other values for WRMD3-0 are reserved.)

Bits3-0: RDMD3-0: Read Mode Select Bits.
The Read Mode Select Bits control how the interface logic responds to reads to the FLASHDAT Register per the following values:
0000: A FLASHDAT read provides the data in the FASHDAT register, but is otherwise ignored.
0001: A FLASHDAT read initiates a read of the byte addressed by the FLASHADR register if no operation is currently active. This mode is used for block reads.
0010: A FLASHDAT read initiates a read of the byte addressed by FLASHADR only if no operation is active and any data from a previous read has already been read from FLASHDAT. This mode allows single bytes to be read (or the last byte of a block) without initiating an extra read.
(All other values for RDMD3-0 are reserved.)

Figure 21.4. FLASHADR: JTAG Flash Address Register

																Reset Value
																0x0000
Bit15															Bit0	

This register holds the address for all JTAG Flash read, write, and erase operations. This register autoincrements after each read or write, regardless of whether the operation succeeded or failed.

Bits15-0: Flash Operation 16-bit Address.

Figure 21.5. FLASHDAT: JTAG Flash Data Register

DATA7	DATA6	DATA5	DATA4	DATA3	DATA2	DATA1	DATA0	FAIL	FBUSY	Reset Value
Bit9	Bit8	Bit7	Bit6	Bit5	Bit4	Bit3	Bit2	Bit1	Bit0	0000000000

This register is used to read or write data to the Flash memory across the JTAG interface.

Bits9-2: DATA7-0: Flash Data Byte.

Bit1: FAIL: Flash Fail Bit.
- 0: Previous Flash memory operation was successful.
- 1: Previous Flash memory operation failed. Usually indicates the associated memory location was locked.

Bit0: FBUSY: Flash Busy Bit.
- 0: Flash interface logic is not busy.
- 1: Flash interface logic is processing a request. Reads or writes while FBUSY = 1 will not initiate another operation

Figure 21.6. FLASHSCL: JTAG Flash Scale Register

FOSE	FRAE	-	-	FLSCL3	FLSCL2	FLSCL1	FLSCL0	Reset Value
Bit7	Bit6	Bit5	Bit4	Bit3	Bit2	Bit1	Bit0	00000000

This register controls the Flash read timing circuit and the prescaler required to generate the correct timing for Flash operations.

Bit7: FOSE: Flash One-Shot Enable Bit.
- 0: Flash read strobe is a full clock-cycle wide.
- 1: Flash read strobe is 50nsec.

Bit6: FRAE: Flash Read Always Bit.
- 0: The Flash output enable and sense amplifier enable are on only when needed to read the Flash memory.
- 1: The Flash output enable and sense amplifier enable are always on. This can be used to limit the variations in digital supply current due to switching the sense amplifiers, thereby reducing digitally induced noise.

Bits5-4: UNUSED. Read = 00b, Write = don't care.

Bits3-0: FLSCL3-0: Flash Prescaler Control Bits.
The FLSCL3-0 bits control the prescaler used to generate timing signals for Flash operations. Its value should be written before any Flash operations are initiated. The value written should be the smallest integer for which:

$$FLSCL[3:0] > \log_2(f_{SYSCLK} / 50kHz)$$

Where f_{SYSCLK} is the system clock frequency. All Flash read/write/erase operations are disallowed when FLSCL[3:0] = 1111b.

21.3. Debug Support

Each MCU has on-chip JTAG and debug circuitry that provide *non-intrusive, full speed, in-circuit debug using the production part installed in the end application* using the four pin JTAG I/F. Silicon Labs' debug system supports inspection and modification of memory and registers, setting breakpoints, watchpoints, single stepping, and run and halt commands. No additional target RAM, program memory, or communications channels are required. All the digital and analog peripherals are functional and work correctly (remain in sync) while debugging. The WDT is disabled when the MCU is halted during single stepping or at a breakpoint.

The C8051F000DK, C8051F005DK, C8051F010DK, and C8051F015DK are development kits with all the hardware and software necessary to develop application code and perform in-circuit debugging with each MCU in the C8051F000 family. Each kit includes an Integrated Development Environment (IDE) which has a debugger and integrated 8051 assembler. It has an RS-232 to JTAG protocol translator module referred to as the EC. There is also a target application board with a C8051F000, F005, F010, or F015 installed and with a large prototyping area. The kit also includes RS-232 and JTAG cables, and wall-mount power supply.

Contact Information

Silicon Laboratories Inc.

4635 Boston Lane
Austin, TX 78735
Tel: 1+(512) 416-8500
Fax: 1+(512) 416-9669
Toll Free: 1+(877) 444-3032

Email: productinfo@silabs.com
Internet: www.silabs.com

The information in this document is believed to be accurate in all respects at the time of publication but is subject to change without notice. Silicon Laboratories assumes no responsibility for errors and omissions, and disclaims responsibility for any consequences resulting from the use of information included herein. Additionally, Silicon Laboratories assumes no responsibility for the functioning of undescribed features or parameters. Silicon Laboratories reserves the right to make changes without further notice. Silicon Laboratories makes no warranty, representation or guarantee regarding the suitability of its products for any particular purpose, nor does Silicon Laboratories assume any liability arising out of the application or use of any product or circuit, and specifically disclaims any and all liability, including without limitation consequential or incidental damages. Silicon Laboratories products are not designed, intended, or authorized for use in applications intended to support or sustain life, or for any other application in which the failure of the Silicon Laboratories product could create a situation where personal injury or death may occur. Should Buyer purchase or use Silicon Laboratories products for any such unintended or unauthorized application, Buyer shall indemnify and hold Silicon Laboratories harmless against all claims and damages.

Silicon Laboratories and Silicon Labs are trademarks of Silicon Laboratories Inc.
Other products or brandnames mentioned herein are trademarks or registered trademarks of their respective holders