FIBOX MNX PCM

180 X 255 X 75

FIBOX

This is a sample photo.

Order symbol PCM 200/75 G

El. number **EAN-code** 6418074038142

Sweden

Denmark

Finland 3421652

Including

Enclosure cover with cover screws, body with mounting screws and gasket.

Product Properties

USA: NEMA Type 1,4,4X and 6, 12 and 13

EURO: IP 66(60529)

MNX PCM

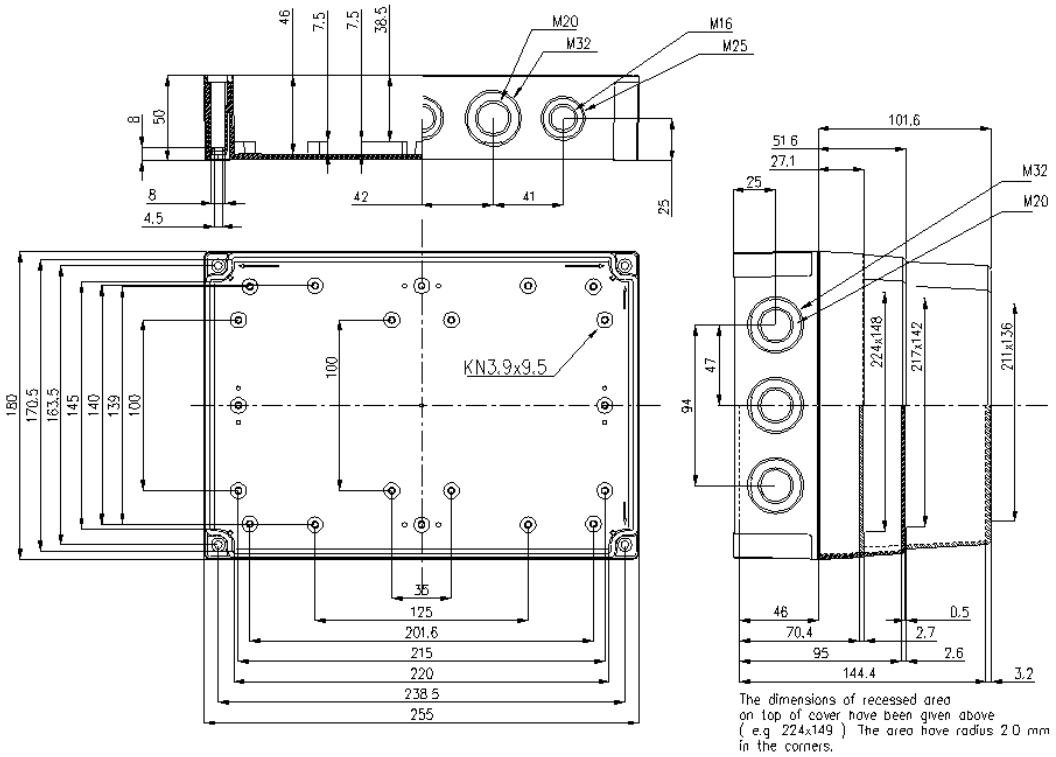

Technical Information of Product Group

Standard colour:	RA 7035	Temp. range-in cont. use:	- 40 °C - + 80 °C
Flame resistance:	UL94-5V (UL 746 C 5)	Temp. range-of material:	- 40 °C - + 120 °C

Accessories

Sealing bushing	DP 14553
Cover screw head	MB 14552
Condensation water plug	MB 12189
Mounting screw	KN 3.9x9.5
Ventilation device	MB 10631
Inspection window	L 10
Cover screw	SS 14551H
Mounting plate	MIV 200
Swing door kit	HFP 180
DIN-Rail	MIV 20
DIN-Rail	MIN 15
DIN-Rail	MIN 20
DIN-Rail	MIV 15
Front plate	FP A 200/180
Hinge	TH A

(c) FIBOX Oy Data subject to change without notice.