THIS DRAWING IS UNPUBLISHED. RELEASED FOR PUBLICATION JAN ,1979.
© COPYRIGHT 1979 BY TYCO ELECTRONICS CORPORATION. ALL RIGHTS RESERVED.

LOC	DIST
J	—

REVISIONS

P	LTR	DESCRIPTION	DATE	DWN	APVD
	A	RELEASED ECR-05-009552	15AUG05	C.Z	S.Y

-1, -3; AS SHOWN

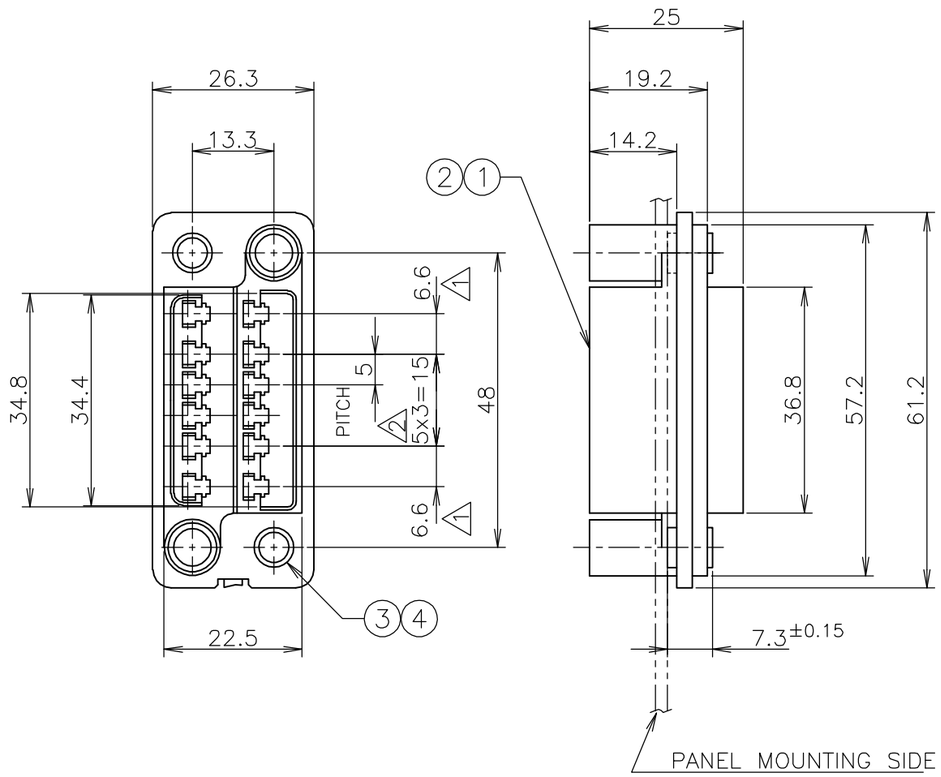

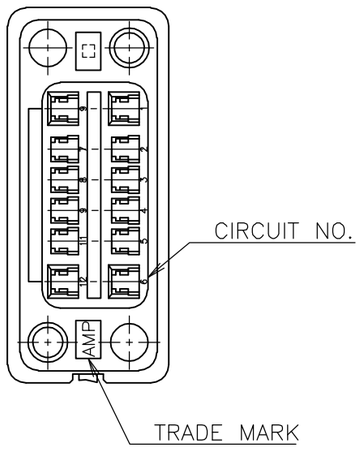

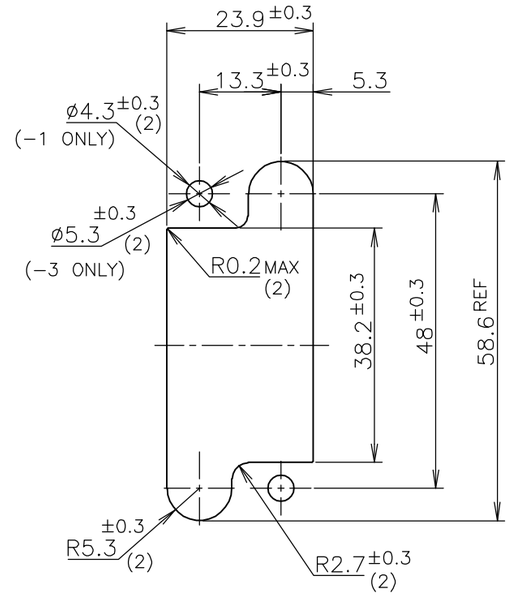

THK 1.6±0.2
RECOMMENDED PANEL CUTOUT DIM.

1. FOR POWER CIRCUITS (4 POS)
2. FOR SIGNAL CIRCUITS (8 POS)
3. ACCOMMODATED CONTACTS ARE
   STRIP P/N 170311, 170312, 170484
   L.P P/N 170313, 170314, 170485
4. MALE HSG P/N IS 172061
5. MATERIAL:
   HOUSING: PBT 94V-0
   BUSH: JIS H3250, C3602 BD-F
6. FINISH:
   NICKEL PLATED PER AMP SPEC 112-25.

QTY REQD PER ASSY -3	-1	PART NO	NAME	REMARKS	ITEM NO
2	⊣⊢	1-172065-3	↑	(4mm)	4
⊣⊢	2	1-172065-1	FLOATING BUSH ASSY	(3mm)	3
1	⊣⊢	172062-3	↑	↑ (4mm)	2
⊣⊢	1	172062-1	DRAWER CONN FEMALE HSG	12 POS (3mm)	1

PARTS LIST

THIS DRAWING IS A CONTROLLED DOCUMENT.

DIMENSIONS: mm

TOLERANCES UNLESS OTHERWISE SPECIFIED:
0 PLC ± 0.4
1 PLC ± 0.4
2 PLC ± 0.4
3 PLC ± 0.4
4 PLC ± 0.4
ANGLES ± -

MATERIAL 5

FINISH 6

DWN C.ZHU 15AUG05
CHK I.WANG 15AUG05
APVD S.YAO 15AUG05
PRODUCT SPEC
APPLICATION SPEC
WEIGHT

CUSTOMER DRAWING

tyco Electronics
Tyco Electronics AMP K.K.
Kawasaki, Japan

NAME
12POS FEMALE HSG ASSY
DRAWER CONNECTOR

SIZE	CAGE CODE	DRAWING NO	RESTRICTED TO
A3	00779	C-5172069	—

SCALE 1:1 SHEET 1 OF 1 REV A