| CONVERSION CHART | |
|---|---|
| INCH | MM |
| .004 | 0.10 |
| .008 | 0.20 |
| .010 | 0.25 |
| .016 | 0.40 |
| .020 | 0.50 |
| .031 | 0.79 |
| .035 | 0.90 |
| .059 | 1.50 |
| .079 | 2.00 |
| .090 | 2.29 |
| .098 | 2.50 |
| .118 | 3.00 |
| .138 | 3.50 |
| .146 | 3.71 |
| .209 | 5.30 |
| .220 | 5.59 |
| .236 | 5.99 |
| .394 | 10.00 |
| .551 | 14.00 |

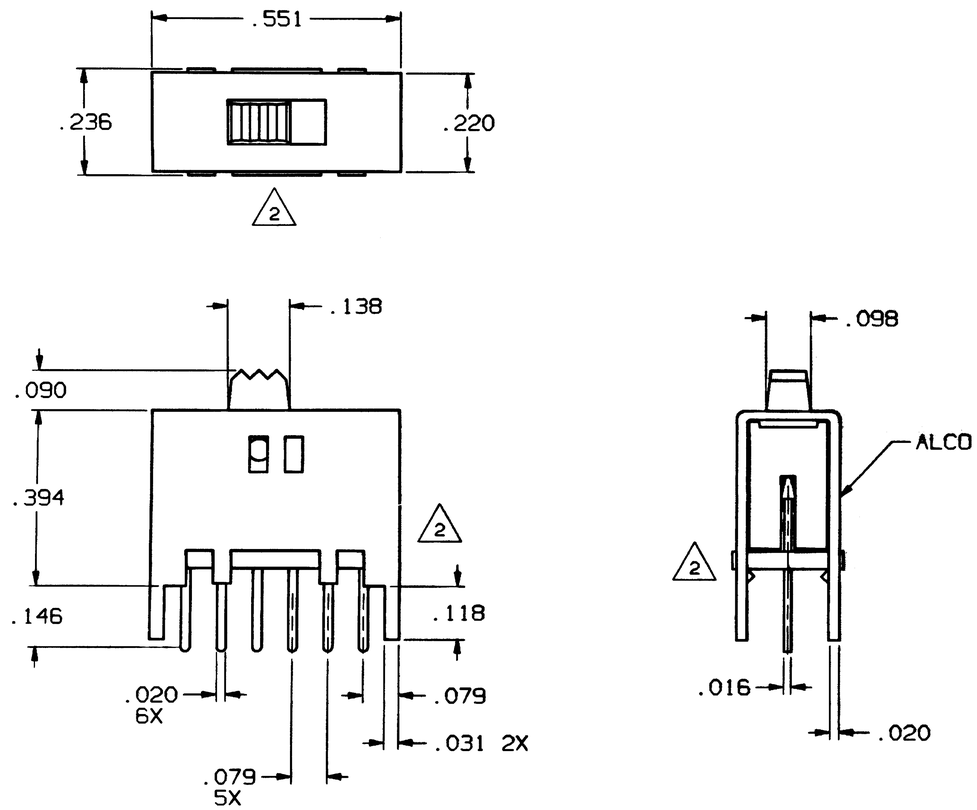


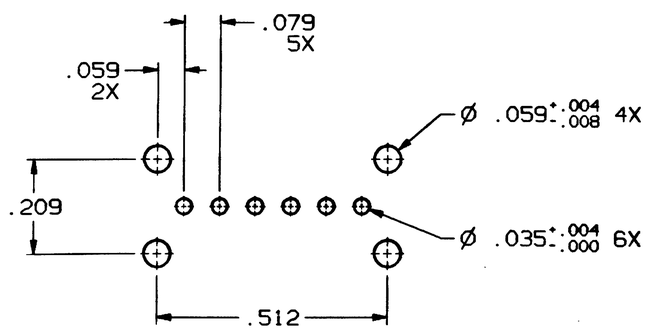


**P.C. HOLE LAYOUT**

TOLERANCE = ±.004

1 **SPECIFICATIONS:**

MATERIALS:
FRAME: STEEL, TIN PLATED.
ACTUATOR: PBT 94V-0.
MOVABLE CONTACT: GOLD PLATED OVER NICKEL.
STATIONARY CONTACT: GOLD PLATED OVER NICKEL.
TERMINALS: GOLD PLATED OVER NICKEL.

ELECTRICAL:
CONTACT RATING: 0.4 VA MAX. @ 20 VDC OR PEAK AC.
INITIAL CONTACT RESISTANCE: 20 MILLIOHMS MAX., INITIAL.
INSULATION RESISTANCE: 1,000 MΩ MIN. AT 500 VDC.
DIELECTRIC STRENGTH: 500 VOLTS RMS AT SEA LEVEL.
LIFE: 10,000 OPERATIONS.

MECHANICAL:
OPERATING FORCE: 100g TO 600g.

ENVIRONMENTAL:
OPERATING TEMPERATURE: -20°C TO +85°C (-4°F TO +185°F).
STORAGE TEMPERATURE: -40°C TO +100°C (-40°F TO +212°F).

1 **NOTES:**

1. INTERPRET DRAWING PER ASME Y14.5M-1994.
2. TRAVEL BETWEEN POSITIONS .079.

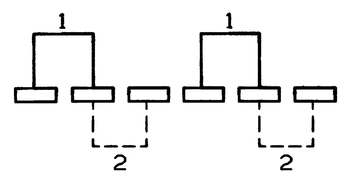


**SCHEMATIC**

THIS IS A C.A.D. GENERATED DRAWING.
DO NOT MAKE MANUAL REVISIONS TO MASTER.

| REV | REVISIONS |
|---|---|
| A | ECO# 2200 ESR# |
| B | ECO# 2774 1-8-88 |
| C | ECO# 2815 PWS/CF 3-21-88 |
| D | ECO# 3102 TH/CF 4-3-89 |
| 0 | ECO# 3884 11-30-90 DS |
| 1 | REVISED ECO# 392-95 S.KIRCORIAN 5-15-95 APP'D: M.LEPAGE 6-8-95 |
| 2 | REVISED ECO# 801-95 L.S. 11-6-95 APP'D: 11-8-95 |

1 **OUTLINE DRAWING**

SPECIFICATIONS ARE SUBJECT TO CHANGES WITHOUT NOTICE

THIRD ANGLE PROJECTION

TOLERANCES (EXCEPT AS NOTED)
ANGULAR = ±1°
DECIMAL .XX = ±
DECIMAL .XXX = ±.010
DECIMAL .XXXX = ±

AUGAT CONFIDENTIAL
This document contains information which is the exclusive property of Augat Inc.
Distribution, reproduction or use by others is not permitted without the expressed written consent of Augat Inc.

UNLESS OTHERWISE SPECIFIED DIMENSIONS ARE IN INCHES DO NOT SCALE PRINT

FILE NAME: 807390UT
DIRECTORY: SLDSWTCH

MATERIAL: SEE SPECIFICATIONS

FINISH: SEE SPECIFICATIONS

ORIGINAL DATE OF DRAWING: 7/86

DRAWN: T.H. DATE: 7/86
CHECKED: DATE:
APPROVED: M.LEPAGE DATE: 6-8-95
CODE IDENT. NO. 91506 DWG. SIZE C
NEXT ASSY:

AUGAT INC.
452 JOHN DIETSCH BLVD.
ATTLEBORO FALLS, MASS. 02763

TITLE: **OUTLINE DRAWING**
SLIDE SWITCH
(MSS2200G)

DWG. NO. 80739-SD REV. 2
PRODUCT CODE: C15
SCALE: SHEET 1 OF 1

CAD080992C

Property of Tyco Electronics Corporation January, 2003
CUSTOMER DRWG: 6-1437576-0 REV: 99 PG 1 OF 1