Part Number: 22-02-1194

2.50mm Pitch KK® PC Board Connector, Right Angle, 1.27µm Tin (Sn), 19 Circuits

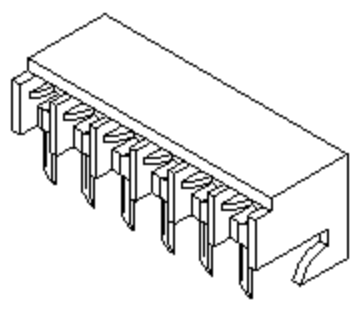

Series image - Reference only

Status:	**OBSOLETE**
Replacement:	Contact Molex
Series:	7534
Category:	PCB Receptacles
Overview:	KK® Interconnect System - Molex
Engineering/Old PN:	753419A

CHECK DISTRIBUTOR INVENTORY

Add to My Parts

Email this page

Go to **Part Detail**▼

Mates With Part(s):
6494, 3094, 3202, 3022

Application Tooling

FAQ

Tooling specifications and manuals are found by selecting the products below.

Crimp Height Specifications are then contained in the Application Tooling Specification document.

Previously Available Application Tooling
Check our list of old tooling that used to be available for this part

Product Environmental Compliance

EU ELV:Product not active

EU RoHS:Product not active

EU RoHS Phthalates:Product not active

China RoHS:

REACH SVHC:Product not active

Low-Halogen Status:Product not active

EU RoHS Certificate of Compliance (PDF)

Multiple Part Product Compliance Statements
EU RoHS, REACH SVHC, & Low-Halogen

Multiple Part Industry Compliance Documents

*IPC 1752A Class C
*IPC 1752A Class D
*Molex Product Compliance Declaration

Questions on Product Environmental Compliance? EmailProductCompliance@molex.com

Request Molex's CMRT from conflictminerals@molex.com

Part Detail

COLLAPSE ALL

General

Status	**Obsolete**
Category	PCB Receptacles
Series	7534
Application	Board-to-Board, Signal
Overview	KK® Interconnect System - Molex
Product Name	KK®
UPC	800753738584

Physical

Circuits (Loaded)	19
Circuits (maximum)	19
Color - Resin	Natural (White)
Durability (mating cycles max)	25
Flammability	94V-0
Glow-Wire Compliant	No
Material - Metal	Phosphor Bronze
Material - Plating Mating	Tin
Material - Plating Termination	Tin
Material - Resin	Nylon
Number of Rows	1
Orientation	Right Angle
PC Tail Length	3.60mm
PCB Locator	No
PCB Retention	Yes
PCB Thickness - Recommended	1.60mm
Packaging Type	Tray
Pitch - Mating Interface	2.50mm
Plating min - Mating	1.016µm
Plating min - Termination	1.016µm
Polarized to PCB	Yes
Temperature Range - Operating	0°C to +75°C
Termination Interface: Style	Through Hole

Electrical

(Please review the Product Specification for specific details.)	
Current - Maximum per Contact	2.5A
Voltage - Maximum	250V

Agency Certification

Please find UL Certificates by searching the UL Database using the Molex Series Number. Click here to visit the UL Database	
CSA	LR19980
UL	E29179

Material Info

Engineering Number	753419A

Molex is a registered trademark of Molex, LLC in the United States of America and may be registered in other countries; all other trademarks listed herein belong to their respective owners.

© Copyright 2017