THIS DRAWING IS UNPUBLISHED. RELEASED FOR PUBLICATION -,- .
© COPYRIGHT - By - ALL RIGHTS RESERVED.

| LOC | DIST |
|---|---|
| FB | 00 |

REVISIONS

| P | LTR | DESCRIPTION | DATE | DWN | APVD |
|---|---|---|---|---|---|
| | A1 | REVISED PER ECO-11-005033 | 26MAR11 | RK | HMR |

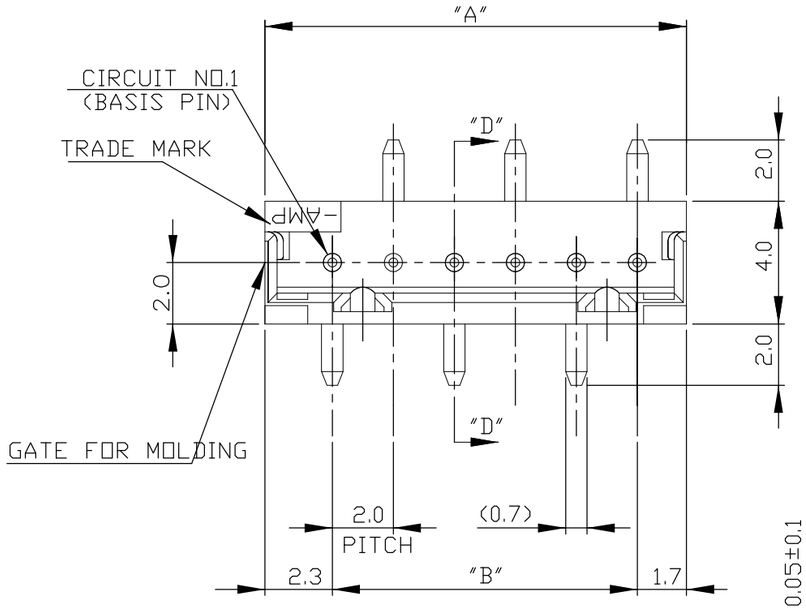


1. MATERIAL:HOUSING-6T PA G.F.30%(UL94V0)
   COLOR- BLACK OR NATURAL
   POST- TIN BRASS
2. OCCUPANT AREA ON PC BOARD (AFTER CONNECTOR MATING)
3. TO BE MEASURED WITH CONNECTOR PLCED ON HORIZONTAL DATUM SURFACE,FLOAT OF SOLDER TINE FROM DATUM SURFACE IS 0.1mm MAX.
4. TUBE P/N 8-720999-6
5. PRODUCT MUST COME OUT SMOOTHLY FROM TUBE AT INCLINING THE TUBE TO 45°

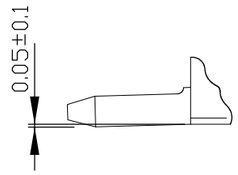


DETAIL"E"
SCALE10-1

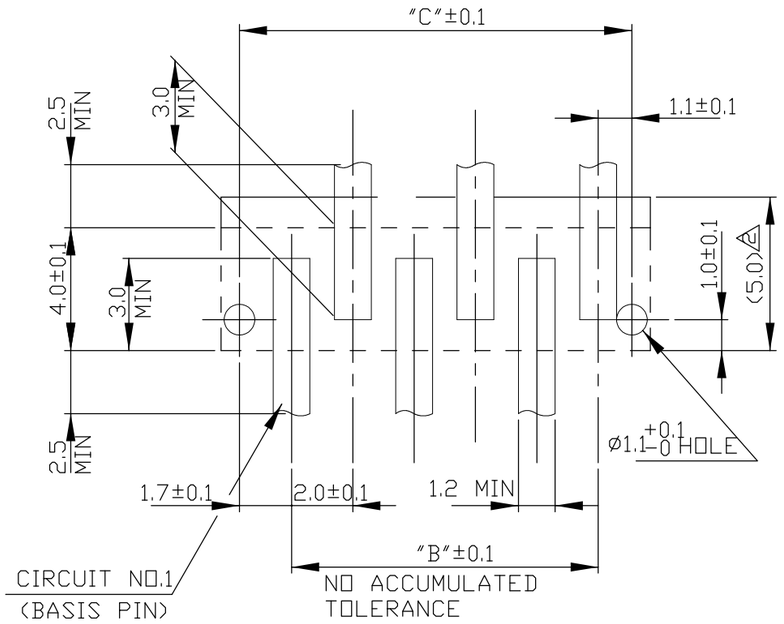


RECOMMENDED P.C.BOARD
(P.C.B. THK:0.8mm MIN)

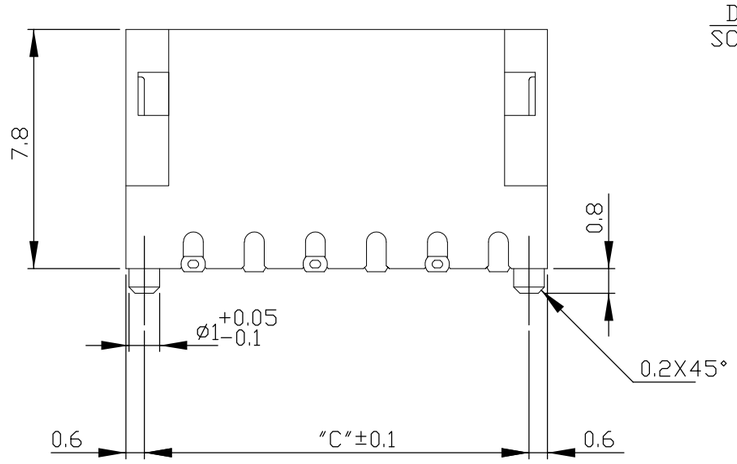


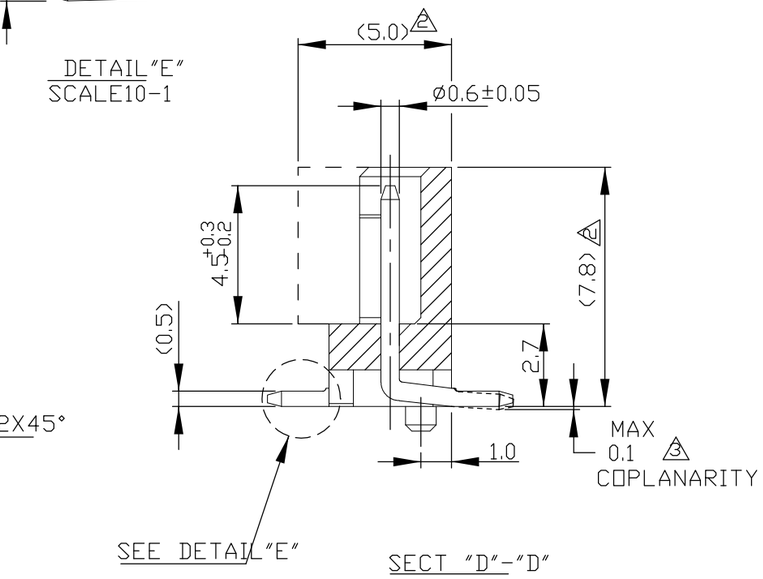


| QTY'S/ TUBE | "A" | "B" | "C" | POS. | NATURAL | BLACK |
|---|---|---|---|---|---|---|
| 20 | 20.0 | 16.0 | 18.8 | 9 | 6-292171-9 | 292171-9 |
| 25 | 18.0 | 14.0 | 16.8 | 8 | 6- -8 | -8 |
| 30 | 16.0 | 12.0 | 14.8 | 7 | 6- -7 | -7 |
| 30 | 14.0 | 10.0 | 12.8 | 6 | 6- -6 | -6 |
| 40 | 12.0 | 8.0 | 10.8 | 5 | 6- -5 | -5 |
| 45 | 10.0 | 6.0 | 8.8 | 4 | 6- -4 | -4 |
| 60 | 8.0 | 4.0 | 6.8 | 3 | 6- -3 | -3 |
| 80 | 6.0 | 2.0 | 4.8 | 2 | 6-292171-2 | 292171-2 |

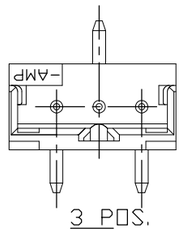


3 POS.

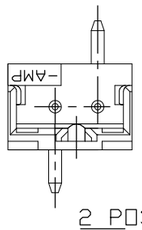


2 POS.

TOLERANCES UNLESS OTHERWISE SPECIFIED:
10≥* : ±0.2
30≥*≥10 : ±0.25
100≥*≥30 : ±0.3
ANGEL : ±3°

THIS DRAWING IS A CONTROLLED DOCUMENT.

DIMENSIONS: mm

TOLERANCES UNLESS OTHERWISE SPECIFIED:
0 PLC ± -
1 PLC ± -
2 PLC ± -
3 PLC ± -
4 PLC ± -
ANGLES ± -

MATERIAL

FINISH

| | | |
|---|---|---|
| DWN | J.JIANG | 23JAN03 |
| CHK | S.YAO | 23JAN03 |
| APVD | T.SASAKI | 23JAN03 |
| PRODUCT SPEC | 108-60016 | |
| APPLICATION SPEC | | |
| WEIGHT | | |

TE Connectivity

NAME
TUBE PACKING AMP CT CONN
POST HDR ASS'Y (STD-V SMT)
-

| SIZE | CAGE CODE | DRAWING NO | RESTRICTED TO |
|---|---|---|---|
| A3 | 00779 | C-292171 | — |

CUSTOMER DRAWING

| SCALE | SHEET | REV |
|---|---|---|
| 1:1 | 1 OF 1 | A1 |