MICRO SWITCH
a Honeywell Division
FED. MFG. CODE 91929

SWITCH-BASIC

CATALOG LISTING
BZ-RW9223312

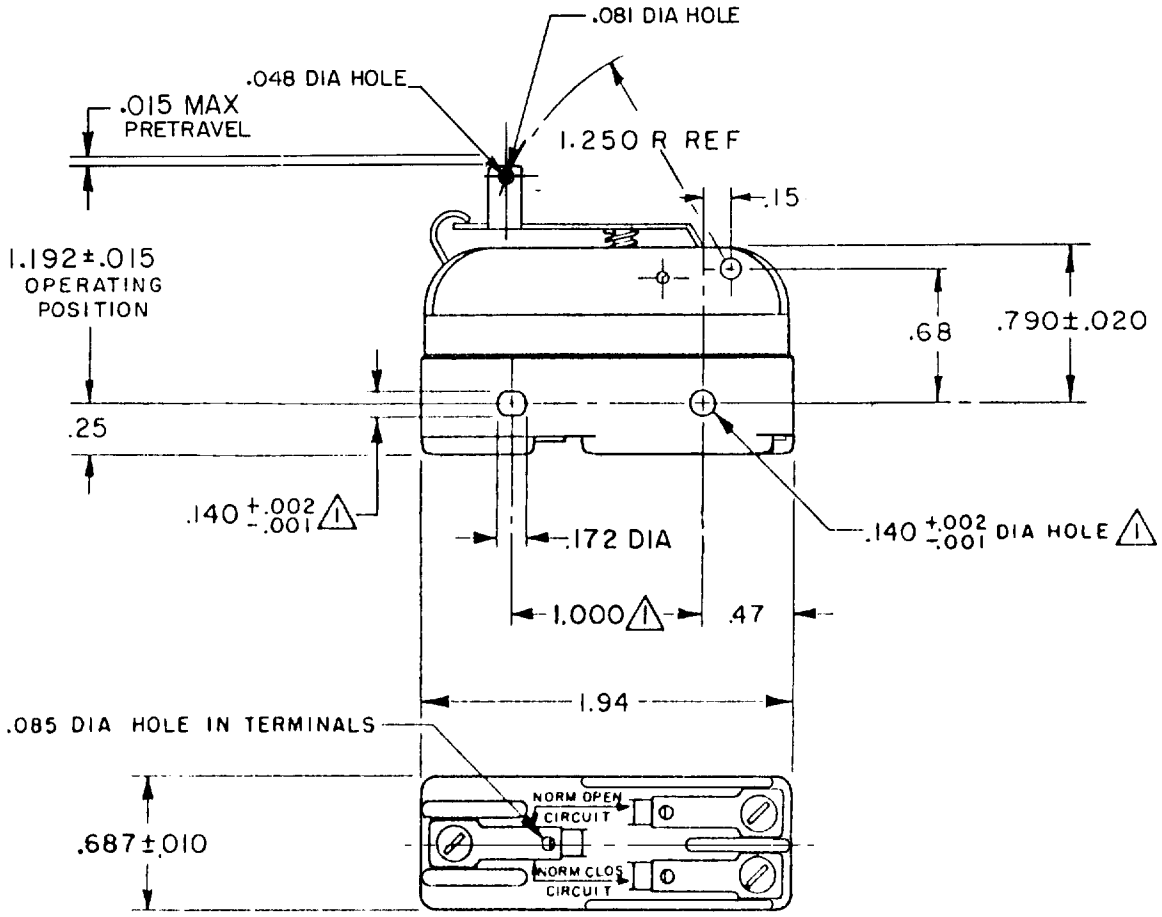

NOTE -
⚠1 - MOUNTING HOLES WILL ACCEPT PINS OR SCREWS OF .139 MAX DIA ON 1.000 ±.002 CENTERS
2 - PLASTIC PARTS ARE MADE OF MINERAL FILLED PHENOLICS

THIS DRAWING COVERS A PROPRIETARY ITEM AND IS THE PROPERTY OF MICRO SWITCH, A DIVISION OF HONEYWELL. THIS DRAWING IS NOT TO BE COPIED OR USED WITHOUT THE APPROVAL OF MICRO SWITCH.

THIRD ANGLE PROJECTION

CHARACTERISTICS	ELECTRICAL DATA	SCALE FULL / DO NOT SCALE PRINT
OPERATING FORCE - - - - - - 12 OZ MAX	CONTACT ARRANGEMENT S P D T	UNLESS OTHERWISE SPECIFIED TOLERANCES ARE
RELEASE FORCE - - - - - - - - 4 OZ MIN		ONE PLACE (.0) ±.030
DIFFERENTIAL TRAVEL - - - .0005 - .0010	L95 10A 125, 250 OR 480 VAC 1/8HP 125 VAC, 1/4HP 250 VAC	TWO PLACE (.00) ±.015
OVERTRAVEL - - - - - - - - - - .100 MIN		THREE PLACE (.000) ±.005
	L288 CE	ANGLES ±
		WEIGHT

CATALOG LISTING BZ-RW9223312 PAGE 1 OF 1
RELEASE NO. PR-8591
REPLACES
ISSUE 6
CHECK
REVISIONS
A CO-94212E DCS 17 SEP 99
B 203222 CSL 6 JUN 01
C 0011943 VKR 23MAR05
CHECK
17 SEP 99
CHECK JAF
17 SEP 99
DRAWN DCS
RASTER