THIS DRAWING IS UNPUBLISHED. RELEASED FOR PUBLICATION -,- .
© COPYRIGHT - By - ALL RIGHTS RESERVED.

LOC	DIST
G	14

REVISIONS

P	LTR	DESCRIPTION	DATE	DWN	APVD
	AB2	REVISED PER ECO-11-004820	11MAR11	RK	HMR

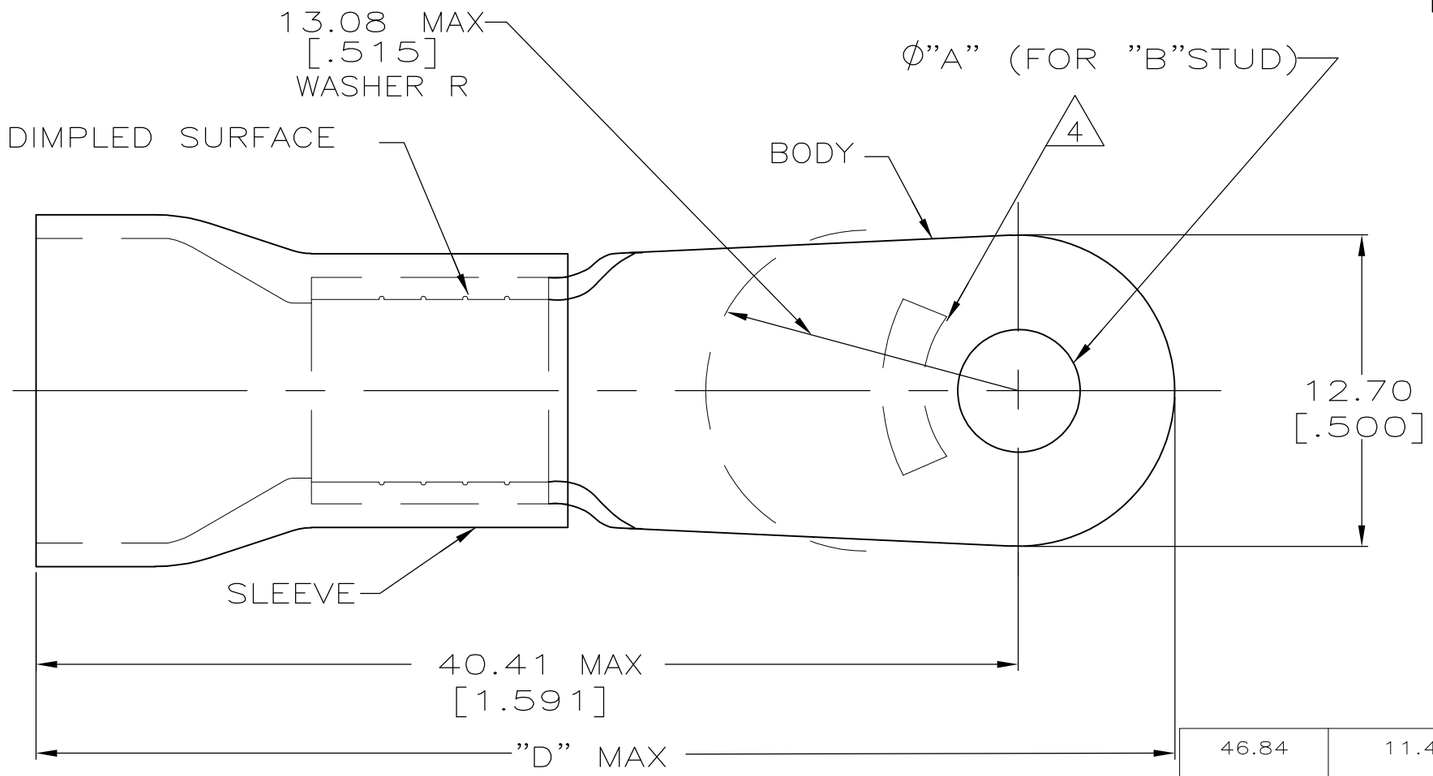

AMP WIRE RANGE	FILE E13288	LR7189 Certified
6 AWG STRANDED	6 AWG STRANDED	6 AWG STRANDED

1. STAMP AMP 6* LOCATE APPROX AS SHOWN
2. TONGUE MATERIAL THK 1.14±0.08[.045±.003]
3. SEE TABLE FOR WIRE INSULATION DIA MAX
4. TAPE ITEMS ARE ON 30.48[1.200] CENTERS
5. OBSOLETED AND REPLACED BY 52042-5
6. OBSOLETE

"D"	WIRE INSULATION DIA	"B"	"A"	QTY	PACKAGE TYPE	PART NO
46.84 [1.844]	11.43 [.450]	1/4	6.73±0.13 [.265±.005]	500	ON TAPE	6 1-52042-4
				100	LOOSE PC	1-52042-3
46.84 [1.844]	11.07 [.436]	#10	5.00±0.08 [.197±.003]	500	ON TAPE	1-52042-0
47.47 [1.869]	9.14 [.360]			100	LOOSE PC, BOX SPL	5 9-52042-5
		1/4	6.73±0.13 [.265±.005]	20		6 8-52042-5
46.84 [1.844]	11.07 [.436]			500	ON TAPE	52042-9
						52042-7
		#8	4.34±0.08 [.171±.003]			52042-6
47.47 [1.869]	9.14 [.360]	#10	5.00±0.08 [.197±.003]	100	LOOSE PC	52042-5
46.84 [1.844]	11.07 [.436]					52042-4
47.47 [1.869]	9.14 [.360]	1/4	6.73±0.13 [.265±.005]			52042-3
		#8	4.34±0.08 [.171±.003]			52042-2
46.84 [1.844]	11.07 [.436]	1/4	6.73±0.13 [.265±.005]			52042-1
		#8	4.34±0.08 [.171±.003]			52042

AMP INCORPORATED
CUSTOMER SERVICE SYSTEMS

FOR ADDITIONAL PRODUCT INFORMATION OR COPIES OF DRAWINGS AND TECHNICAL DOCUMENTS	PRODUCT INFORMATION CENTER 1-800-522-6752	
FOR APPLICATION TOOLING INFORMATION	TOOLING ASSISTANCE CENTER 1-800-722-1111	
FOR ORDER ENTRY	1-800-526-5142	THIS DRAWING IS A CONTROLLED DOCUMENT FOR AMP INCORPORATED. IT IS SUBJECT TO CHANGE AND THE CONTROLLING ENGINEERING ORGANIZATION SHOULD BE CONTACTED FOR THE LATEST REVISION.

MAX RECOMMENDED OPERATING TEMPERATURE: 105° C

VOLTAGE RATING: 600 V MAX

CIRCULAR MIL AREA: 10.54-16.77mm² [20,800-33,100] STRANDED

THIS DRAWING IS A CONTROLLED DOCUMENT.

DIMENSIONS: mm [INCHES]

TOLERANCES UNLESS OTHERWISE SPECIFIED:

0 PLC	± -
1 PLC	± -
2 PLC	± 0.20[.008]
3 PLC	± -
4 PLC	± -
ANGLES	± -

MATERIAL: COPPER PER ASTM B-152 PVC, COLOR: BLUE

FINISH: TIN PLATE PER ASTM B-545

DWN	S.S. GOULDEN	9-29-93
CHK	R. HERSEY	9-29-93
APVD	B. BARE	9-29-93
PRODUCT SPEC	NOT AVAILABLE	
APPLICATION SPEC	114-2161	
WEIGHT	-	

TE Connectivity

NAME: TERMINAL, RING TONGUE, PLASTIC-GRIP,™ WIRE SIZE: 6 AWG

SIZE	CAGE CODE	DRAWING NO	RESTRICTED TO
A3	00779	C-52042	-

CUSTOMER DRAWING | SCALE 4:1 | SHEET 1 OF 1 | REV AB2

1470-19 (3/11)