# Customer Information Sheet

| DRAWING No.: M40-600XX46 | SHEET 2 OF 2 | IF IN DOUBT - ASK | © | NOT TO SCALE | THIRD ANGLE PROJECTION | ALL DIMENSIONS IN mm |
|---|---|---|---|---|---|---|

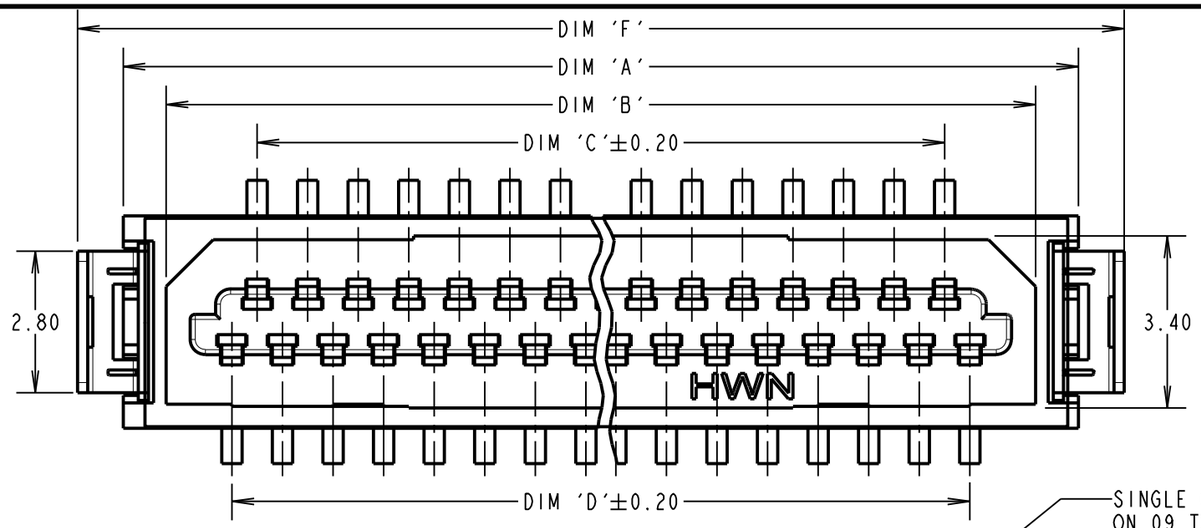


| PART No. | No. OF CONTACTS | DIM 'A' | DIM 'B' | DIM 'C' | DIM 'D' | DIM 'E' | DIM 'F' | DIM 'G' | DIM 'H' | NOTE 3 |
|---|---|---|---|---|---|---|---|---|---|---|
| M40-6000946 | 9 | 8.30 | 6.60 | 3.00 | 4.00 | 7.10 | 10.10 | 1.00 | $1.84^{+0.10}_{-0.00}$ | 0.1 MAX |
| M40-6001546 | 15 | 11.30 | 9.60 | 6.00 | 7.00 | 10.10 | 13.10 | | | |
| M40-6002146 | 21 | 14.30 | 12.60 | 9.00 | 10.00 | 13.10 | 16.10 | | | |
| M40-6002546 | 25 | 16.30 | 14.60 | 11.00 | 12.00 | 15.10 | 18.10 | | | |
| M40-6003146 | 31 | 19.30 | 17.60 | 14.00 | 15.00 | 18.10 | 21.10 | 0.80 | $3.00^{+0.00}_{-0.10}$ | 0.15 MAX |
| M40-6004146 | 41 | 24.30 | 22.60 | 19.00 | 20.00 | 23.10 | 26.10 | | | |
| M40-6005146 | 51 | 29.30 | 27.60 | 24.00 | 25.00 | 28.10 | 31.10 | | | |

SPECIFICATIONS:
- MATERIAL:
  - MOULDING = LCP, NATURAL, UL94V-0
  - CONTACTS AND RETAINER = BRASS
- FINISH = 2.03µ MIN 100% TIN, OVER 1.27µ MIN NICKEL
- ELECTRICAL:
  - CURRENT RATING = 0.5 A
  - VOLTAGE RATING = 150V AC
  - DIELECTRIC STRENGTH = 250V AC FOR 1 MINUTE
  - INSULATION RESISTANCE = 500 MΩ MIN
  - CONTACT RESISTANCE = 50 mΩ MAX
- MECHANICAL:
  - DURABILITY = 30 CYCLES MIN
- ENVIRONMENTAL:
  - TEMPERATURE RANGE = -20°C TO +125°C
- PACKING:
  - TUBE

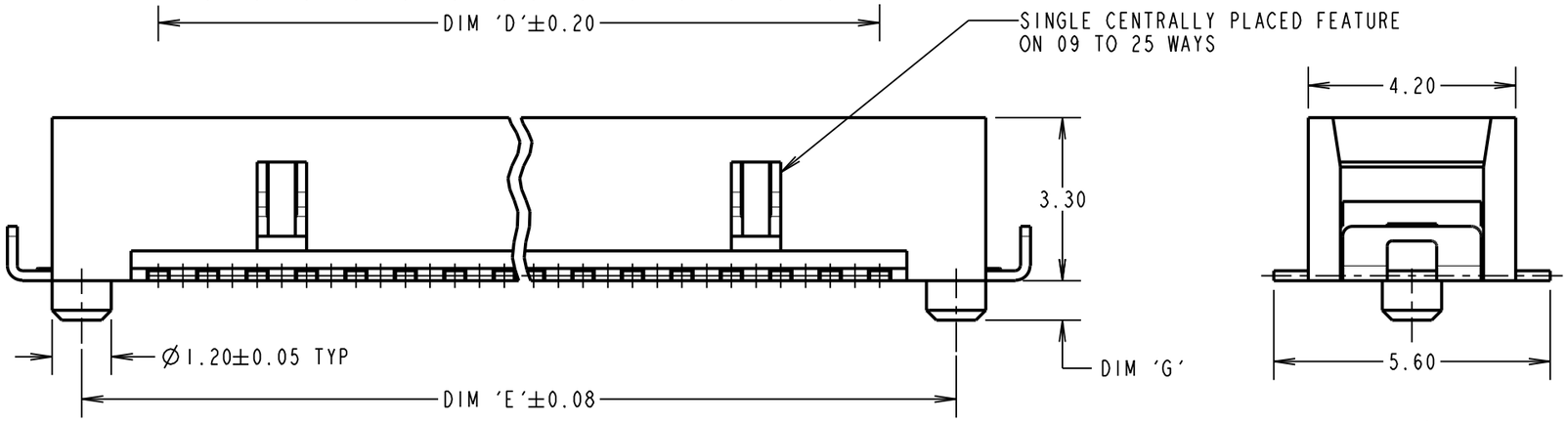


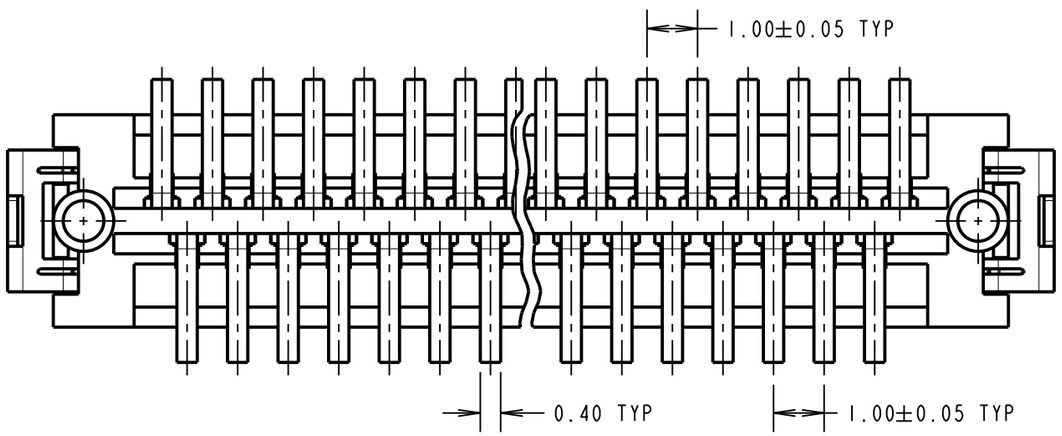


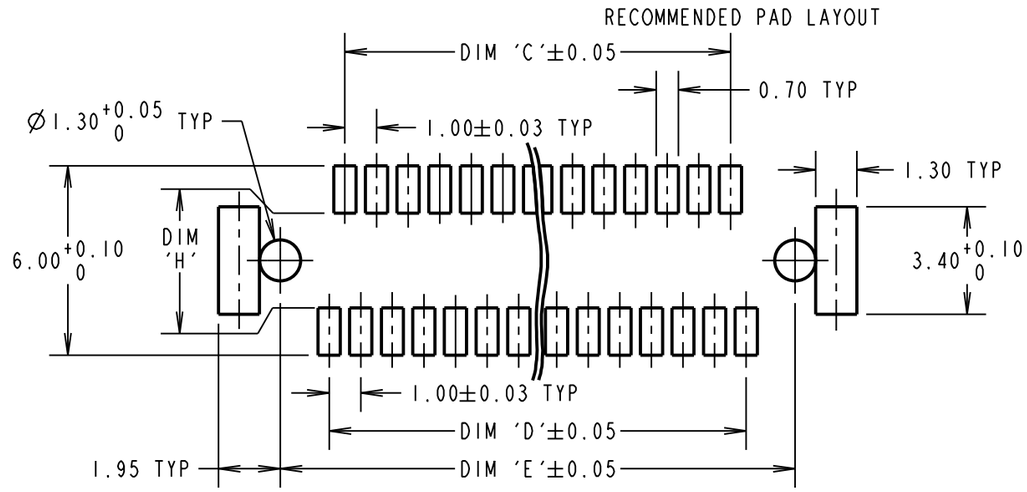


NOTES:
1. MATES WITH M40-620XX46 TO GIVE 4.3mm BOARD TO BOARD HEIGHT.
2. ALL TOLERANCES ARE ±0.25 UNLESS OTHERWISE STATED.
3. COPLANARITY - ALIGNMENT OF SMT TAILS AND RETAINERS MUST NOT EXCEED TOLERANCE GIVEN IN TABLE.

| MSP | 14 | 11.11.14 | 12674 |
|---|---|---|---|
| NAME | ISS. | DATE | C/NOTE |
| APPROVED: | M.PERREN | | |
| CHECKED: | M.PLESTED | | |
| DRAWN: | R.ADDE | | |
| CUSTOMER REF.: | | | |
| ASSEMBLY DRG: | | | |

ORDER CODE:

**M40-600XX46**

No. OF CONTACTS
9, 15, 21, 25, 31, 41, 51.

FINISH:
46 = 100% TIN

HARWIN

www.harwin.com
technical@harwin.com

THIS DRAWING AND ANY INFORMATION OR DESCRIPTIVE MATTER SET OUT HEREON ARE CONFIDENTIAL AND COPYRIGHT PROPERTY OF THE HARWIN GROUP AND MUST NOT BE DISCLOSED, LOANED, COPIED OR USED FOR MANUFACTURING, TENDERING OR FOR ANY OTHER PURPOSE WITHOUT THEIR WRITTEN PERMISSION.

TOLERANCES UNLESS STATED
X. = ±1mm
X.X = ±0.50mm
X.XX = ±0.10mm
X.XXX = ±0.01mm
ANGLES = ±5°

MATERIAL: SEE ABOVE
FINISH: SEE ABOVE
S/AREA: mm²

TITLE: 1.00mm PITCH SMT PLUG CONNECTOR

DRAWING NUMBER: M40-600XX46

SHT 2 OF 2