THIS DRAWING IS UNPUBLISHED. RELEASED FOR PUBLICATION -.- .
© COPYRIGHT - BY TYCO ELECTRONICS CORPORATION. ALL RIGHTS RESERVED.

LOC	DIST
AD	00

REVISIONS

P	LTR	DESCRIPTION	DATE	DWN	APVD
	C	ECO-05-009580	07FEB06	BSV	MM

1. HOUSING: GLASS FILLED POLYESTER; COLOR: BLACK.
2. CONTACT: PHOSPHOR BRONZE.
3. NICKEL UNDERPLATE: 0.00127 [.000050] MIN – ALL OVER.
4. TIN–LEAD PLATE: 0.00254 [.000100] MIN – SOLDER POSTS.
5. GOLD PLATE: 0.00076 [.000030] MIN – CONTACT AREA.
6. NICKEL PLATE PER MIL–G–45204.
   GOLD PLATE PER QQ–N–290.
7. AMP PART NUMBER AND DATE CODE ARE MARKED IN APPROXIMATE AREA SHOWN, EITHER SIDE.
8. RECOMMENDED PCB FINISHED HOLE DIA: 1.02 ±0.08 [.040±.003].
9. THE RETENTIVE FEATURE OF THIS CONNECTOR IS DESIGNED FOR FULL SEATING IN .062±.008 THICK CIRCUIT BOARDS. FOR APPLICATIONS IN BOARDS OF OTHER THICKNESSES CONTACT AMP INCORPORATED.
10. MATTE TIN PLATE: 0.00254 [.000100] MIN – SOLDER POSTS.

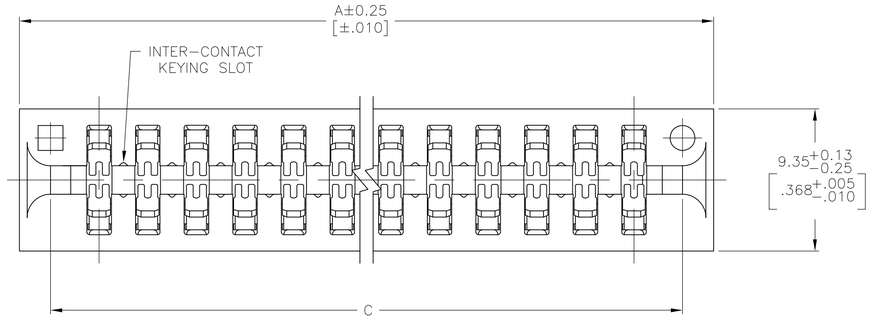

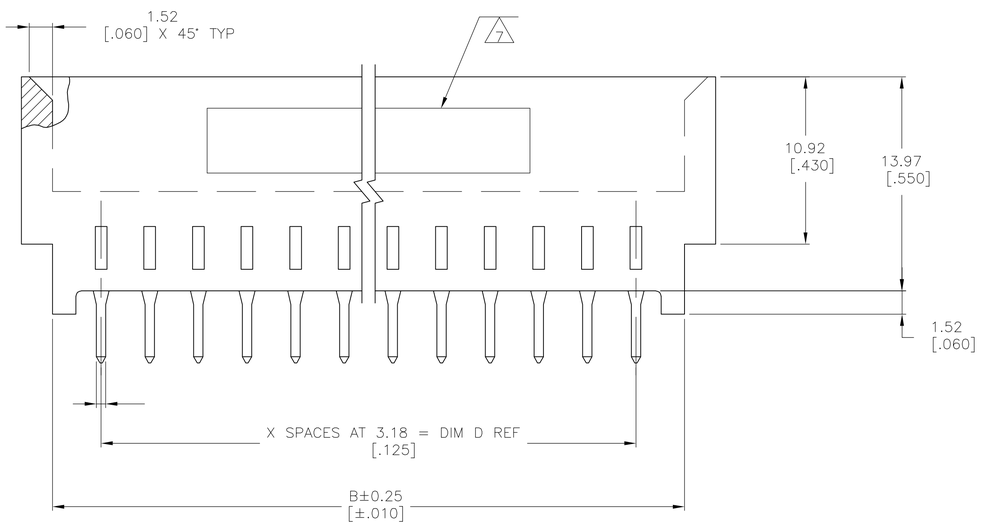

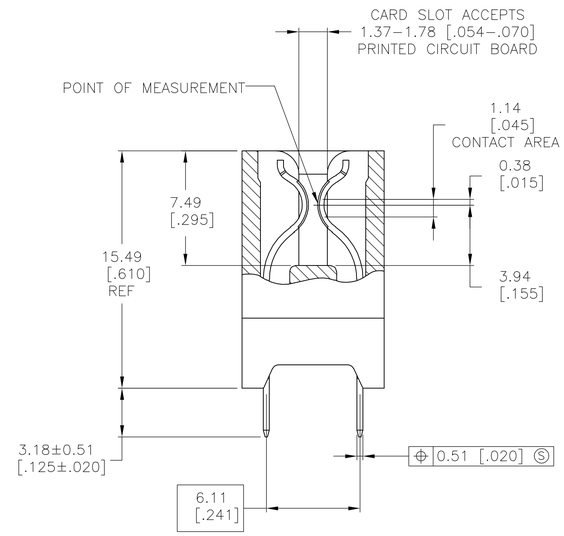

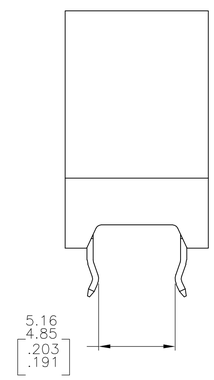

BOARD RETENTION FEATURE

BOARD RETENTION LOCATION	D	C	B	A	X	NO OF POSN.	PART NUMBER
3–10	15.88 [.625]	22.22 [.875]	22.22 [.875]	26.29 [1.035]	5	6	10 5–650207–1
3–10	15.88 [.625]	22.22 [.875]	22.22 [.875]	26.29 [1.035]	5	6	650207–1

THIS DRAWING IS A CONTROLLED DOCUMENT.

DIMENSIONS: mm [INCHES]

TOLERANCES UNLESS OTHERWISE SPECIFIED:
0 PLC ± –
1 PLC ± –
2 PLC ± 0.13 [.005]
3 PLC ± –
4 PLC ± –
ANGLES ± –

MATERIAL: HOUSING : 1; CONTACT: 2
FINISH: CONTACT: 3 4 5 6

DWN R.SHIREY/UTA 11/6/91
CHK J.DIORAZIO 8–10–92
APVD J.DIORAZIO 8–10–92
PRODUCT SPEC 108–9039
APPLICATION SPEC –
WEIGHT –

tyco Electronics
Tyco Electronics Corporation
Harrisburg, Pa 17105–3608

NAME: CONNECTOR ASSEMBLY, STANDARD EDGE II, 3.18 [.125] CL, SELECT BOARD RETENTION

SIZE	CAGE CODE	DRAWING NO	RESTRICTED TO
A1	00779	C–650207	–

CUSTOMER DRAWING
SCALE 5:1 SHEET 1 OF 1 REV C