Alle Rechte vorbehalten/ *All rights reserved*

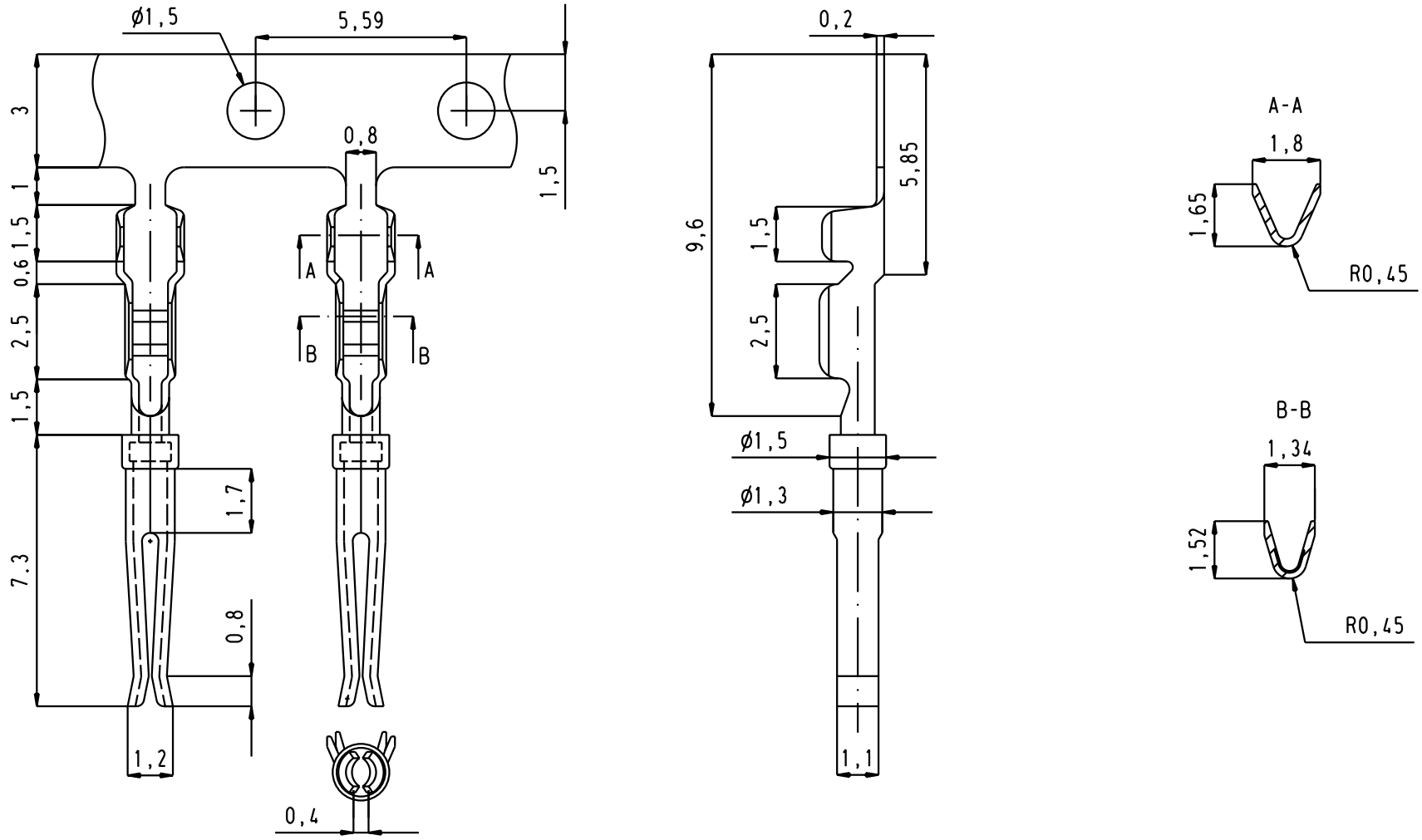

09560008275	0.76 µm Au
09560008277	3
Part number	Performance level

31376	20-JAN-03	S.H.
Mod.	Dat.	Name

	Dat.	Name
Detail.	20-JAN-03	S.H.
Insp.		
Stand.		

All Dim. in mm
Orig. Size DIN A 4

HARTING EURL
F-95972 Paris

D-Sub, high density,
stamped female contact
for AWG 24-26
500 pcs bulk in plastic bag

Maßstab/ *Scale* 6 : 1

TB 0956000827x

Sub.

Blatt/ *Page* 1 /