Part Number: 0554513270

Status: Active

Description: 1.25mm Pitch Mi ll™ System Wire-to-Board Header, Dual Row, Vertical, 32 Circuits

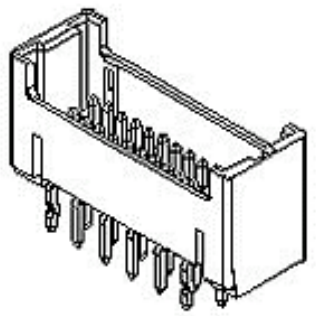

Series image - Reference only

Documents:

3D Model
Drawing (PDF)
Product Specification PS-54596-019 (PDF)
RoHS Certificate of Compliance (PDF)

General

Product Family	PCB Headers
Series	55451
Application	Signal, Wire-to-Board
Product Name	Mini Mi II™
UPC	756054760901

Physical

Breakaway	No
Circuits (Loaded)	32
Circuits (maximum)	32
Color - Resin	Natural
Durability (mating cycles max)	30
First Mate / Last Break	No
Glow-Wire Compliant	No
Guide to Mating Part	No
Keying to Mating Part	Yes
Lock to Mating Part	Yes
Material - Plating Mating	Tin
Material - Plating Termination	Tin
Material - Resin	Nylon
Net Weight	1293.670/mg
Number of Rows	2
Orientation	Vertical
PC Tail Length	3.00mm
PCB Locator	Yes
PCB Retention	Yes
PCB Thickness - Recommended	1.60mm
Packaging Type	Tray
Pitch - Mating Interface	1.25mm
Shrouded	Fully
Stackable	No
Surface Mount Compatible (SMC)	No
Temperature Range - Operating	-40°C to +105°C
Termination Interface: Style	Through Hole

Electrical

Current - Maximum per Contact	1.5A
Voltage - Maximum	100V

Material Info

Reference - Drawing Numbers

Product Specification	PS-54596-019
Sales Drawing	SD-55451-006

EU ELV
Not Relevant

EU RoHS
Compliant

China RoHS

REACH SVHC
Contains SVHC(2014 December 17): No

Halogen-Free Status
Not Low-Halogen

Need more information on product environmental compliance?

Email productcompliance@molex.com
Please visit the Contact Us section for any non-product compliance questions.

China ROHS	Green Image
ELV	Not Relevant

Search Parts in this Series
55451 Series

Mates With
54596 IDT Receptacle Housing