THIS DRAWING IS UNPUBLISHED. RELEASED FOR PUBLICATION ,19 .
© COPYRIGHT 19 BY AMP INCORPORATED. ALL RIGHTS RESERVED.

LOC	DIST
G	14

REVISIONS

P	LTR	DESCRIPTION	DATE	DWN	APVD
	B	REDRAWN PER 0720-0377-94	10OCT94	LO	ME

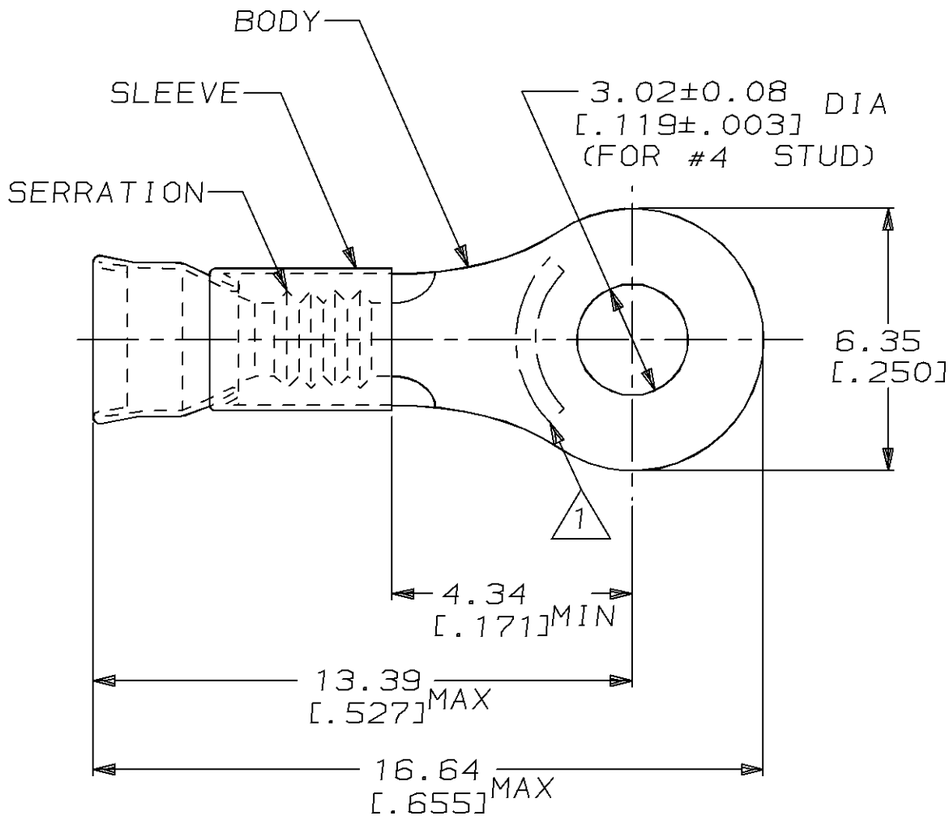

1. STAMP AMP 16-14* APPROX AS SHOWN

2. WIRE INSUL DIA, 3.05-4.32 [.120-.170]

3. TONGUE MATL THK, 0.79±0.05 [.031±.002]

1000	LOOSE PIECE	322371
QTY	PACKAGE TYPE	PART NO

AMP INCORPORATED
CUSTOMER SERVICE SYSTEM

FOR ADDITIONAL PRODUCT INFORMATION OR COPIES OF DRAWINGS AND TECHNICAL DOCUMENTS	PRODUCT INFORMATION CENTER 1-800-522-6752
FOR APPLICATION TOOLING INFORMATION	TOOLING ASSISTANCE CENTER 1-800-722-1111
FOR ORDER ENTRY	1-800-526-5142

MAX RECOMMENDED OPERATING TEMPERATURE: 343°C [650°F]

VOLTAGE RATING: - -

CIRCULAR MIL AREA: 1.04mm²-2.62mm² [2050-5180]

STRANDED WIRE

THIS DRAWING IS A CONTROLLED DOCUMENT FOR AMP INCORPORATED. IT IS SUBJECT TO CHANGE AND THE CONTROLLING ENGINEERING ORGANIZATION SHOULD BE CONTACTED FOR THE LATEST REVISION.

DIMENSIONS: mm [in]

TOLERANCES UNLESS OTHERWISE SPECIFIED:

0 PLC	±-	
1 PLC	±-	
2 PLC	±0.20	[.008]
3 PLC	±-	
4 PLC	±-	
ANGLES	±-	

MATERIAL: BODY, CU PER ASTM B152; SLEEVE, NI SIL PER ASTM B122

FINISH: BODY, NP, QQ-N-290

DWN	L OLMEDA	10OCT94
CHK	M ELLIS	10OCT94
APVD	S BORTNER	10OCT94
PRODUCT SPEC	–	
APPLICATION SPEC	–	
WEIGHT	–	

AMP Incorporated
Harrisburg, PA 17105-3608

NAME: TERMINAL, RING TONGUE, STRATOTHERM, DIAMOND GRIP, WIRE SIZE, 16-14 AWG

SIZE	CAGE CODE	DRAWING NO
A3	00779	C-322371

CUSTOMER DRAWING

SCALE	SHEET	REV
6:1	1 OF 1	B

AMP 1470-19 REV 09MAY94