DRAWING MADE IN THIRD ANGLE PROJECTION

THIS DRAWING IS UNPUBLISHED. | RELEASED FOR PUBLICATION ,19 .

© COPYRIGHT 19 BY AMP INCORPORATED. ALL INTERNATIONAL RIGHTS RESERVED.

LOC	DIST	P	F
AF	50		

REVISIONS

ZONE	LTR	DESCRIPTION	DATE	APPD
	C	REDRAWN PER 0054-94	2/17/94	PF/GY

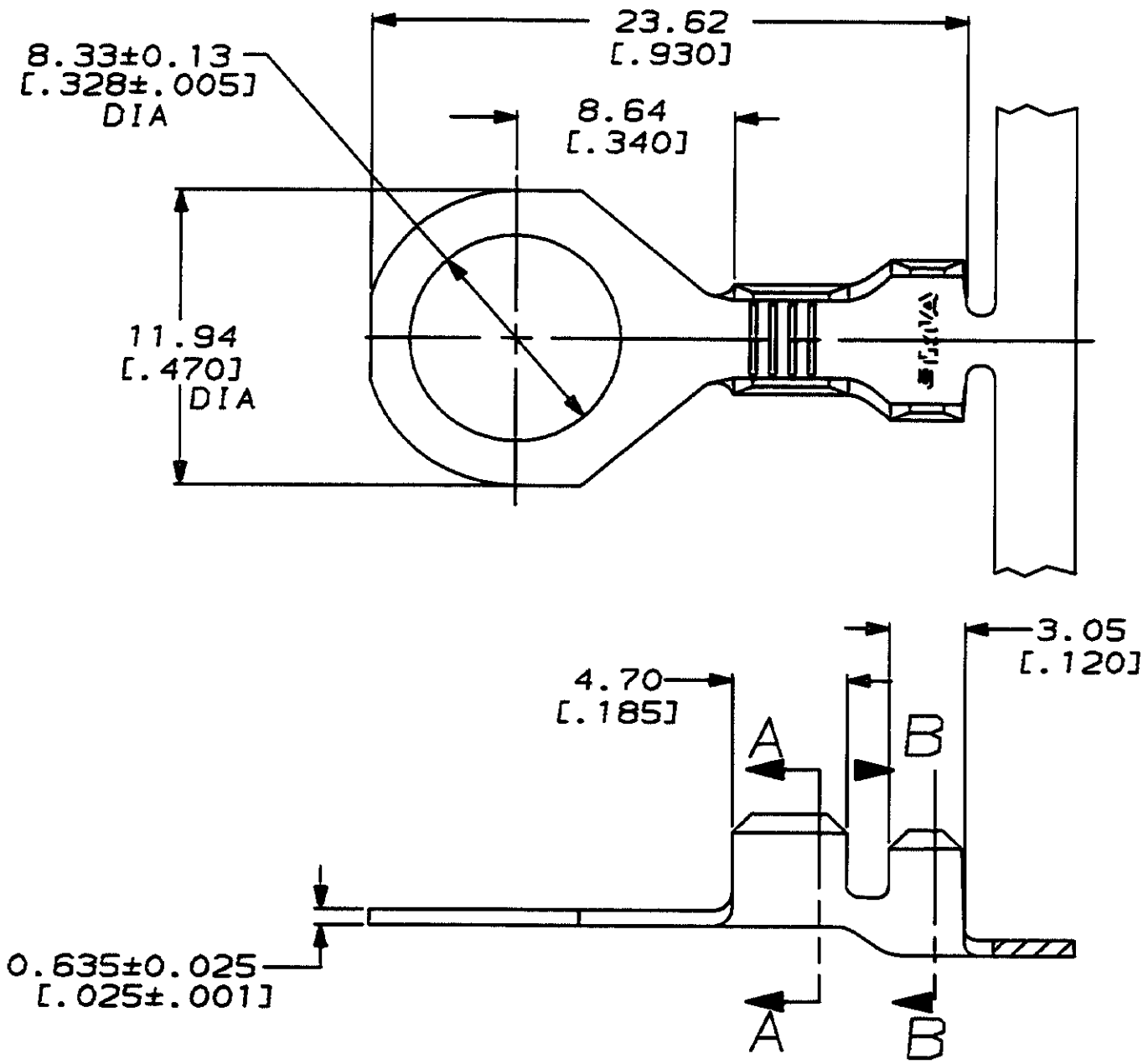

1 CONTINUOUS STRIP ON REEL.

2 INSULATION RANGE: 2.16-3.05 [.085-.120] F CRIMP
3.05-3.56 [.120-.140] O CRIMP.

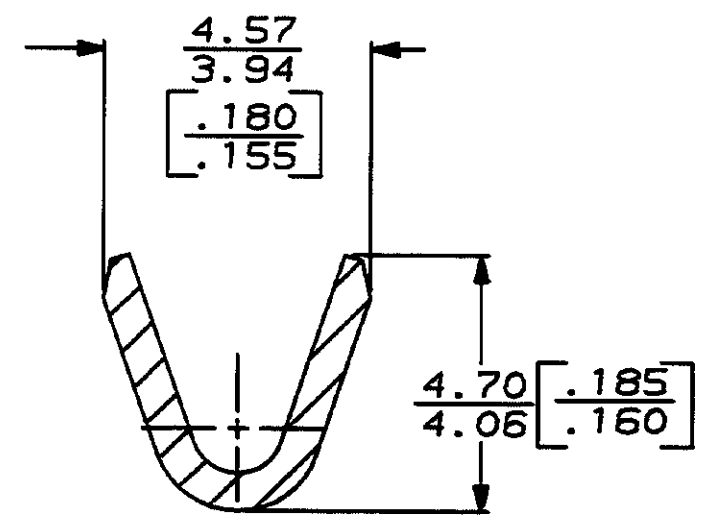

SECTION A-A
SCALE 8:1

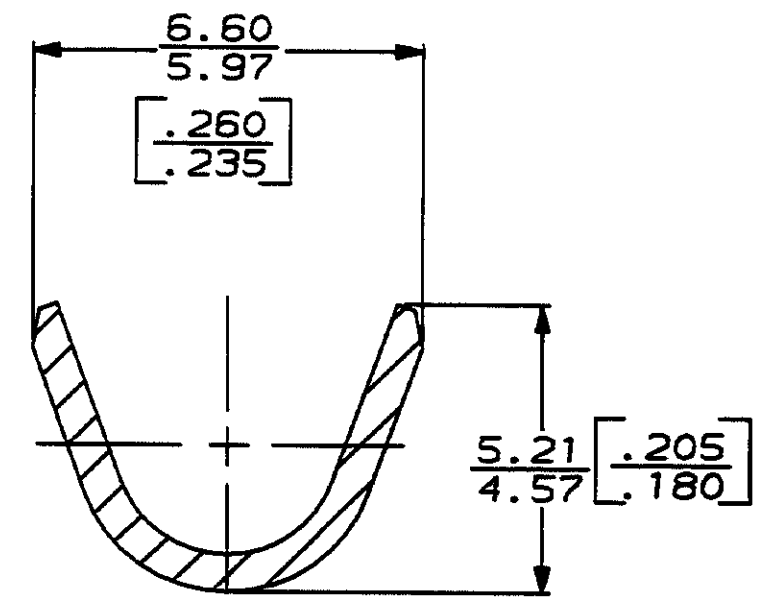

SECTION B-B
SCALE 8:1

2	[18-14] AWG	485030-1
INSULATION RANGE	WIRE RANGE	PART NO

DO NOT SCALE PRINT.
UNLESS SPECIFIED
DIMENSIONS IN mm [INCHES]
TOLERANCES ON:
2 PLC DEC ± 0.25 [.010]
3 PLC DEC ± -
ANGLES ± -

MATERIAL: 082 BRASS

FINISH: 0.002032 [.000080] MIN TIN PL PER MIL-T-10727

DR	2/17/94	PHILLIP M FORTNEY
CHK	2/17/94	JEFF RUTH
APPD	2/17/94	GARY YETTER
APPD	2/17/94	RON KUZO
PRODUCT SPEC	-	
APPLICATION SPEC	-	
WEIGHT	-	

AMP Incorporated
Harrisburg, PA 17105-3608

NAME: RING

SIZE	CAGE CODE	DRAWING NO
B	00779	C-485030
SCALE 4:1		SHEET 1 OF 1

THIS DRAWING IS A CONTROLLED DOCUMENT FOR AMP INCORPORATED. IT IS SUBJECT TO CHANGE AND THE CONTROLLING ENGINEERING ORGANIZATION SHOULD BE CONTACTED FOR THE LATEST REVISION.

AMP 1470-15 REV 3-92

17-FEB-94 13:44:49 amp17795 /files/dept2122/dwg2122/u.rs

CUSTOMER DRAWING