| PRODUCT NUMBER |
|---|
| SEE TABLE |

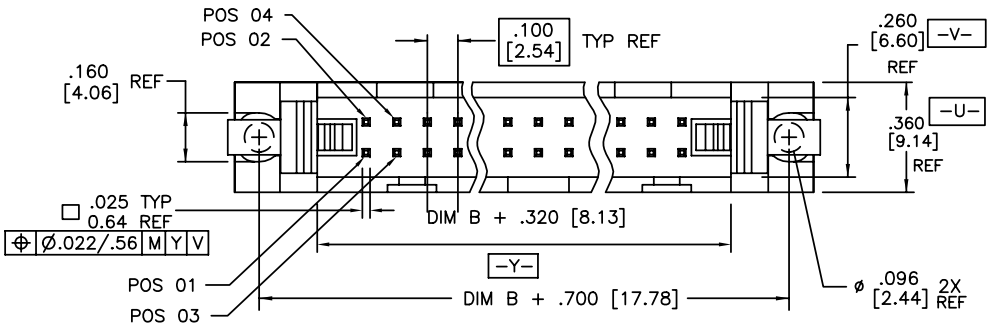


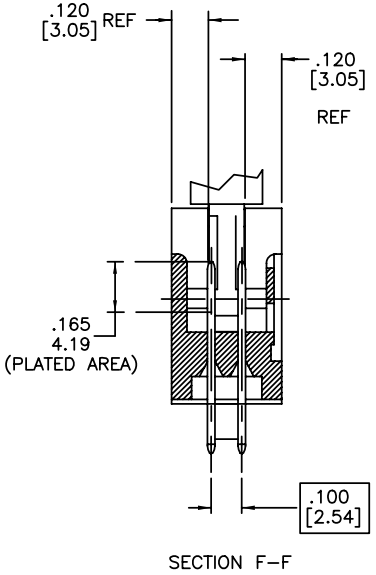


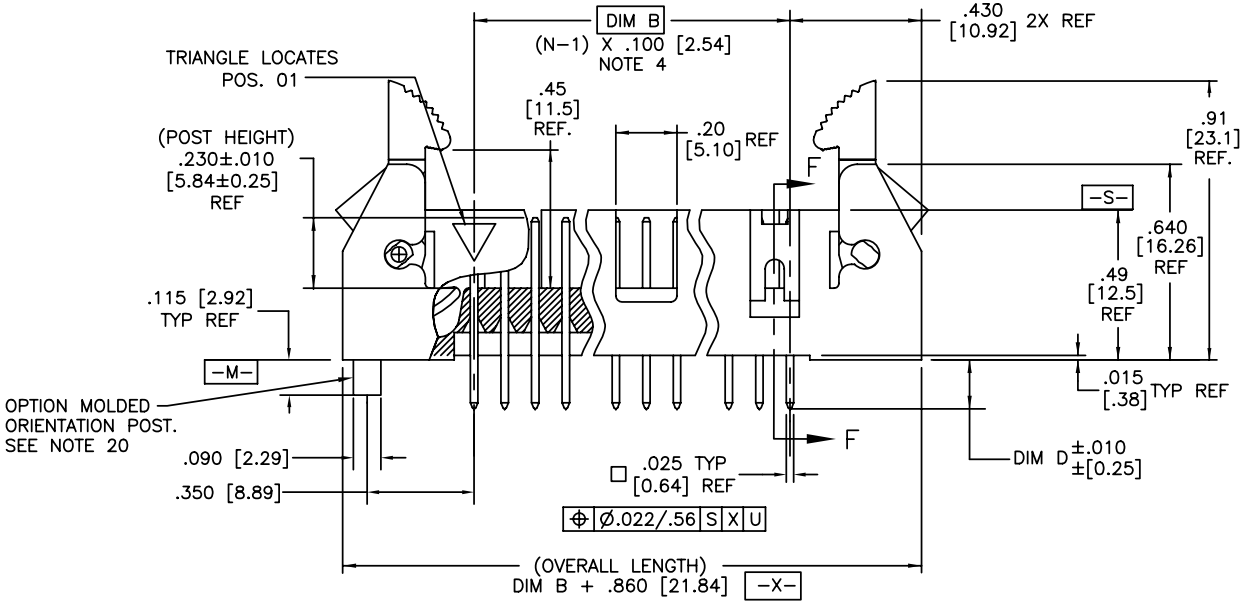


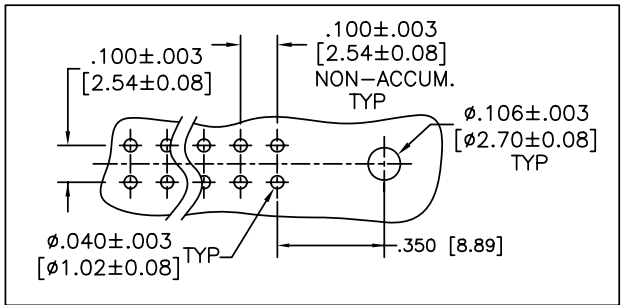


RECOMMENDED PCB HOLE PATTERN

| mat'l. code | | | | surface ISO 1302 | tolerance ISO 406 ISO 1101 | projection | product family QUICKIE |
|---|---|---|---|---|---|---|---|
| ltr | ecn no | dr | date | tolerances unless otherwise specified | | | title |
| BA | N08-0073 | Bobby St | 4/28/08 | angles | linear .XX±.01/.X±0.3 | INCH/MM | HEADER, QUICKIE SEA-HORSE, VERTICAL |
| BB | N09-0007 | R.B | 2009/01/12 | | .XXX±.005/.XX±0.13 | | |
| BC | ELX-N-012097 | J.Z | 2012-07-04 | 0°±2° | .XXXX±.0020/.XXX±0.051 | scale 1:1 | |
| BD | ELX-N-13354 | DCS | 2012-11-02 | dr | M. CORNMAN 8/21/90 | | dwg no 65863 sheet 1 of 23 size A3 |
| BE | ELX-N-17979 | TIM | 2014-06-17 | engr | M. SMYK 8/21/90 | | |
| | | | | chr | M. SMYK 8/21/90 | | type Product Customer Drawing |
| | | | | appd | M. SMYK 8/21/90 | | |

| sheet index | revision | BE | BE | BE | BE | BE | BE | BE | BE | BE | . . . | BE |
|---|---|---|---|---|---|---|---|---|---|---|---|---|
| | sheet | 1 | 2 | 3 | 4 | 5 | 6 | 7 | 8 | 9 | . . . | 23 |

Copyright FCI
FCIconnect.com

NOTES:

1. HOUSING MAT'L: HIGH TEMPERTURE THERMOPLASTIC. UL94V-0.
   COLOR : BLACK
2. PIN MATERIAL: PHOSPHOR-BRONZE
3. 3 LBS/1.36 KG MIN. RETENTION.
4. TO DETERMINE DIMENSION:
   N = NUMBER OF POSITIONS.
   EXAMPLE: 10 POS., (N-1) x .100[2.54]=.900[22.87]
5. RETENTIVE LEG:
   RETENTION FEATURE AVAILABLE ON CONNECTORS WITH .105/2.67, .120/3.05 OR .150/3.81 TAIL LENGTH. RETENTION P/N INCLUDES THE LETTER "R" AFTER THE EXISTING P/N.
   EXAMPLE : 65863-XXX FOR EXISTING P/N
   65863-XXXR FOR RETENTION P/N
   RETENTION FEATURE LOCATION IS MANUFACTURERS OPTION.
   5LB/2.3KG MAX INSERTION FORCE AND .25LB./1KG MIN RETENTION FORCE PER RETENTIVE PIN USING .062/1.57 THICK CIRCUIT BOARD AND RECOMMENDED HOLE PATTERN. RETENTIVE LOCATION AT THE DISCRETION OF THE MANUFACTURER. OMIT FROM PRODUCT NUMBER IF THIS FEATURE IS NOT APPLICABLE.
6. 1° MAX DRAFT PERMISSIBLE ON ALL SURFACES UNLESS OTHERWISE SPECIFIED.
7. PLATING ON LEAD-IN PORTION OF PIN IS MANUFACTURING OPTION.
8. L.P. LATCHES TO BE USED WITH FEMALE CONNECTOR WITHOUT STRAIN RELIEF, , STANDARD LATCHES TO BE USED WITH FEMALE CONNECTOR WITH STRAIN RELIEF.
9. RECOMMENDED MOUNTING SCREW SIZE : #2-56 FILLISTER HEAD MACHINE SCREW, 1/4" LONG FOR 1/16" AND 3/32" BOARD, 5/16" LONG FOR 1/8" BOARD.
10. DASH -7XX IS POLARIZED (PIN MISSING).
11. UNDERPLATING: 50μ"/1.27μm Ni.
12. ADD "LF" SUFFIX AT THE END OF PART NUMBER FOR LEAD FREE OPTION.
13. THIS PRODUCT MEETS EUROPEAN UNION DIRECTIVES AND OTHER COUNTRY REGULATION AS DESCRIBED IN GS-22-008.
14. FOR POLARIZATION, SPECIFY POSITION NUMBER (i.e.. 03= PIN 3) TO OMIT PIN. OMIT FROM PRODUCT NUMBER IF THIS FEATURE IS NOT APPLICABLE.
15. THE HOUSING WILL WITHSTAND EXPOSURE TO 260癈 PEAK TEMPERATURE FOR 15 SECONDS IN A WAVE SOLDER APPLICATION WITH A 1.5mm MINIMUM THICK CIRCUIT BOARD. SEE APPLICATION NOTES/PROCEDURES IF THEY ARE AVAILABLE.
16. "THIS PRODUCT HAS 100% TIN PLATING IN THE INTERFACE AND HAS NOT BEEN TESTED FOR WHISKER GROWTH IN ALL INTERCONNECT ENVIRONMENTS."
17. PLATING OPTIONS:
    PERFORMANCE PLATING WILL BE EITHER GOLD OR GXT ON CONTACT OR TAIL, OPTIONALLY TIN ON TAIL.
18. THE PART NUMBER IN THE DASH NUMBER WITH A LETTER "S" WILL HAVE A SPECIAL SEA HORSE USED.
19. LEAD FREE PLATING: 100u''~160u''/2.54u~4.06u PURE Sn.
20. 65863-XXXP, P-DESIGNATE ORIENTATION POST.(SEE PAGE 23)
21. 65863-XXXF, F-PLATING FOUR SIDES ON CONTACT AREA.(SEE PAGE 23)

HEADER STYLE (LATCHES NOT SHOWN)

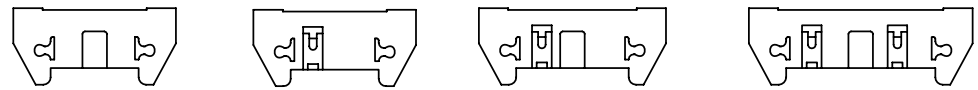


latch style( see note 8 and note 18)

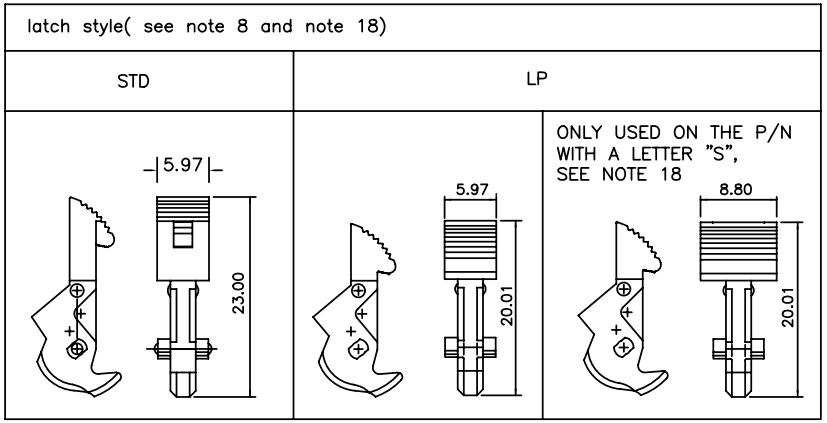


| mat'l. code | | | | surface ISO 1302 √ | tolerance ISO 406 ISO 1101 | projection | product family QUICKIE |
|---|---|---|---|---|---|---|---|
| ltr | ecn no | dr | date | tolerances unless otherwise specified | | | title |
| BE | | | | angles | linear .XX±.01/.X±0.3 | INCH/MM | HEADER, QUICKIE SEA-HORSE, VERTICAL |
| | | | | | .XXX±.005/.XX±0.13 | | |
| | | | | 0°±2° | .XXXX±.0020/.XXX±0.051 | scale 1:1 | |
| | | | | dr | M. CORNMAN 8/21/90 | | dwg no 65863 sheet 2 of 23 size A3 |
| | | | | engr | M. SMYK 8/21/90 | | |
| | | | | chr | M. SMYK 8/21/90 | | |
| | | | | appd | M. SMYK 8/21/90 | | type Product Customer Drawing |
| sheet index | revision sheet | | | | | | |

Copyright FCI
FCIconnect.com

| PRODUCT NO NOTE 12,13 | SIZE | LATCH NOTE 8 | DIM B | DIM D | TERMINAL PLATING | STYLE | |
|---|---|---|---|---|---|---|---|
| 65863–001 | 2x5 | NO | .400/10,160 | .105/ 2,67 | 30u"/0.76u MIN (NOTE 17) OVER 50u"/1.27u Ni | A | |
| –002 | | | | .105/ 2,67 | 120u"~200u"/3.04um~5.08umTIN/LEAD | | NOTE 16,19 |
| –003 | | | | .150/ 3,81 | 30u"/0.76u MIN (NOTE 17) OVER 50u"/1.27u Ni | | |
| –004 | | | | .150/ 3,81 | 120u"~200u"/3.04um~5.08umTIN/LEAD | | NOTE 16,19 |
| –005 | | | | .675/17,15 | 30u"/0.76u MIN (NOTE 17) OVER 50u"/1.27u Ni | | |
| –006 | 2x5 | | .400/10,160 | .675/17,15 | 120u"~200u"/3.04um~5.08umTIN/LEAD | A | NOTE 16,19 |
| –007 | 2x7 | | .600/15,240 | .105/ 2,67 | 30u"/0.76u MIN (NOTE 17) OVER 50u"/1.27u Ni | C | |
| –008 | | | | .105/ 2,67 | 120u"~200u"/3.04um~5.08umTIN/LEAD | | NOTE 16,19 |
| –009 | | | | .150/ 3,81 | 30u"/0.76u MIN (NOTE 17) OVER 50u"/1.27u Ni | | |
| –010 | | | | .150/ 3,81 | 120u"~200u"/3.04um~5.08umTIN/LEAD | | NOTE 16,19 |
| –011 | | | | .675/17,15 | 30u"/0.76u MIN (NOTE 17) OVER 50u"/1.27u Ni | | |
| –012 | 2x7 | | .600/15,240 | .675/17,15 | 120u"~200u"/3.04um~5.08umTIN/LEAD | C | NOTE 16,19 |
| –013 | 2x8 | | .700/17.780 | .105/ 2,67 | 30u"/0.76u MIN (NOTE 17) OVER 50u"/1.27u Ni | D | |
| –014 | | | | .105/ 2,67 | 120u"~200u"/3.04um~5.08umTIN/LEAD | | NOTE 16,19 |
| –015 | | | | .150/ 3,81 | 30u"/0.76u MIN (NOTE 17) OVER 50u"/1.27u Ni | | |
| –016 | | | | .150/ 3,81 | 120u"~200u"/3.04um~5.08umTIN/LEAD | | NOTE 16,19 |
| –017 | | | | .675/17,15 | 30u"/0.76u MIN (NOTE 17) OVER 50u"/1.27u Ni | | |
| –018 | 2x8 | | .700/17.780 | .675/17,15 | 120u"~200u"/3.04umTIN/LEAD | | NOTE 16,19 |
| –019 | 2x10 | | .900/22,860 | .105/ 2,67 | 30u"/0.76u MIN (NOTE 17) OVER 50u"/1.27u Ni | | |
| –020 | | | | .105/ 2,67 | 120u"~200u"/3.04umTIN/LEAD | | NOTE 16,19 |
| –021 | | | | .150/ 3,81 | 30u"/0.76u MIN (NOTE 17) OVER 50u"/1.27u Ni | | |
| –022 | | | | .150/ 3,81 | 120u"~200u"/3.04umTIN/LEAD | | NOTE 16,19 |
| –023 | | | | .675/17,15 | 30u"/0.76u MIN (NOTE 17) OVER 50u"/1.27u Ni | | |
| –024 | 2x10 | | .900/22,860 | .675/17,15 | 120u"~200u"/3.04umTIN/LEAD | | NOTE 16,19 |
| –025 | 2x13 | | 1.200/30,480 | .105/ 2,67 | 30u"/0.76u MIN (NOTE 17) OVER 50u"/1.27u Ni | | |
| –026 | | | | .105/ 2,67 | 120u"~200u"/3.04umTIN/LEAD | | NOTE 16,19 |
| –027 | | | | .150/ 3,81 | 30u"/0.76u MIN (NOTE 17) OVER 50u"/1.27u Ni | | |
| –028 | | | | .150/ 3,81 | 120u"~200u"/3.04umTIN/LEAD | | NOTE 16,19 |
| –029 | | | | .675/17,15 | 30u"/0.76u MIN (NOTE 17) OVER 50u"/1.27u Ni | | |
| –030 | 2x13 | | 1.200/30,480 | .675/17,15 | 120u"~200u"/3.04umTIN/LEAD | | NOTE 16,19 |
| | 2x17 | | 1.600/40,640 | .105/ 2,67 | 30u"/0.76u MIN (NOTE 17) OVER 50u"/1.27u Ni | | |
| –032 | | | | .105/ 2,67 | 120u"~200u"/3.04umTIN/LEAD | | NOTE 16,19 |
| –033 | | | | .150/ 3,81 | 30u"/0.76u MIN (NOTE 17) OVER 50u"/1.27u Ni | | |
| –034 | | | | .150/ 3,81 | 120u"~200u"/3.04umTIN/LEAD | | NOTE 16,19 |
| –035 | | | | .675/17,15 | 30u"/0.76u MIN (NOTE 17) OVER 50u"/1.27u Ni | | |
| 65863–036 | 2x17 | NO | 1.600/40,640 | .675/17,15 | 120u"~200u"/3.04umTIN/LEAD | D | NOTE 16,19 |

FCIconnect.com

Copyright FCI

| | | | | | |
|---|---|---|---|---|---|
| mat'l. code | | surface ISO 1302 ✓ | tolerance ISO 406 ISO 1101 | projection | product family QUICKIE |
| ltr / ecn no / dr / date | | tolerances unless otherwise specified | | | title |
| BE | | angles | linear .XX±.01/.X±0.3 / .XXX±.005/.XX±0.13 / .XXXX±.0020/.XXX±0.051 | INCH/MM | HEADER, QUICKIE SEA–HORSE, VERTICAL |
| | | 0°±2° | | scale 1:1 | |
| | | dr | M. CORNMAN | 8/21/90 | dwg no 65863 sheet 3 of 23 size A3 |
| | | engr | M. SMYK | 8/21/90 | |
| | | chr | M. SMYK | 8/21/90 | |
| | | appd | M. SMYK | 8/21/90 | type Product Customer Drawing |
| sheet index | revision sheet | | | | |

form: A3

| PRODUCT NO NOTE 12,13 | SIZE | LATCH NOTE 8 | DIM B | DIM D | TERMINAL PLATING | STYLE | |
|---|---|---|---|---|---|---|---|
| 65863-037 | 2x20 | NO | 1.900/48,260 | .105/ 2,67 | 30u"/0.76u MIN (NOTE 17) OVER 50u"/1.27u Ni | D | |
| -038 | | | | .105/ 2,67 | 120u"~200u"/3.04um~5.08umTIN/LEAD | | NOTE 16,19 |
| -039 | | | | .150/ 3,81 | 30u"/0.76u MIN (NOTE 17) OVER 50u"/1.27u Ni | | |
| -040 | | | | .150/ 3,81 | 120u"~200u"/3.04um~5.08umTIN/LEAD | | NOTE 16,19 |
| -041 | | | | .675/17,15 | 30u"/0.76u MIN (NOTE 17) OVER 50u"/1.27u Ni | | |
| -042 | 2x20 | | 1.900/48,260 | .675/17,15 | 120u"~200u"/3.04um~5.08umTIN/LEAD | | NOTE 16,19 |
| -043 | 2x25 | | 2.400/60,960 | .105/ 2,67 | 30u"/0.76u MIN (NOTE 17) OVER 50u"/1.27u Ni | | |
| -044 | | | | .105/ 2,67 | 120u"~200u"/3.04um~5.08umTIN/LEAD | | NOTE 16,19 |
| -045 | | | | .150/ 3,81 | 30u"/0.76u MIN (NOTE 17) OVER 50u"/1.27u Ni | | |
| -046 | | | | .150/ 3,81 | 120u"~200u"/3.04um~5.08umTIN/LEAD | | NOTE 16,19 |
| -047 | | | | .675/17,15 | 30u"/0.76u MIN (NOTE 17) OVER 50u"/1.27u Ni | | |
| -048 | 2x25 | NO | 2.400/60,960 | .675/17,15 | 120u"~200u"/3.04um~5.08umTIN/LEAD | D | NOTE 16,19 |
| -049 | 2x5 | STD | .400/10,160 | .105/ 2,67 | 30u"/0.76u MIN (NOTE 17) OVER 50u"/1.27u Ni | A | |
| -050 | | | | .105/ 2,67 | 120u"~200u"/3.04um~5.08umTIN/LEAD | | NOTE 16,19 |
| -051 | | | | .150/ 3,81 | 30u"/0.76u MIN (NOTE 17) OVER 50u"/1.27u Ni | | |
| -052 | | | | .150/ 3,81 | 120u"~200u"/3.04um~5.08umTIN/LEAD | | NOTE 16,19 |
| -053 | | | | .675/17,15 | 30u"/0.76u MIN (NOTE 17) OVER 50u"/1.27u Ni | | |
| -054 | 2x5 | | .400/10,160 | .675/17,15 | 120u"~200u"/3.04um~5.08umTIN/LEAD | A | NOTE 16,19 |
| -055 | 2x7 | | .600/15,240 | .105/ 2,67 | 30u"/0.76u MIN (NOTE 17) OVER 50u"/1.27u Ni | C | |
| -056 | | | | .105/ 2,67 | 120u"~200u"/3.04umTIN/LEAD | | NOTE 16,19 |
| -057 | | | | .150/ 3,81 | 30u"/0.76u MIN (NOTE 17) OVER 50u"/1.27u Ni | | |
| -058 | | | | .150/ 3,81 | 120u"~200u"/3.04umTIN/LEAD | | NOTE 16,19 |
| -059 | | | | .675/17,15 | 30u"/0.76u MIN (NOTE 17) OVER 50u"/1.27u Ni | | |
| -060 | 2x7 | | .600/15,240 | .675/17,15 | 120u"~200u"/3.04umTIN/LEAD | C | NOTE 16,19 |
| -061 | 2x8 | | .700/17,780 | .105/ 2,67 | 30u"/0.76u MIN (NOTE 17) OVER 50u"/1.27u Ni | D | |
| -062 | | | | .105/ 2,67 | 120u"~200u"/3.04umTIN/LEAD | | NOTE 16,19 |
| -063 | | | | .150/ 3,81 | 30u"/0.76u MIN (NOTE 17) OVER 50u"/1.27u Ni | | |
| -064 | | | | .150/ 3,81 | 120u"~200u"/3.04umTIN/LEAD | | NOTE 16,19 |
| -065 | | | | .675/17,15 | 30u"/0.76u MIN (NOTE 17) OVER 50u"/1.27u Ni | | |
| -066 | 2x8 | | .700/17,780 | .675/17,15 | 120u"~200u"/3.04umTIN/LEAD | | NOTE 16,19 |
| -067 | 2x10 | | .900/22,860 | .105/ 2,67 | 30u"/0.76u MIN (NOTE 17) OVER 50u"/1.27u Ni | | |
| -068 | | | | .105/ 2,67 | 120u"~200u"/3.04umTIN/LEAD | | NOTE 16,19 |
| -069 | | | | .150/ 3,81 | 30u"/0.76u MIN (NOTE 17) OVER 50u"/1.27u Ni | | |
| -070 | | | | .150/ 3,81 | 120u"~200u"/3.04umTIN/LEAD | | NOTE 16,19 |
| -071 | | | | .675/17,15 | 30u"/0.76u MIN (NOTE 17) OVER 50u"/1.27u Ni | | |
| 65863-072 | 2x10 | STD | .900/22,860 | .675/17,15 | 120u"~200u"/3.04umTIN/LEAD | D | NOTE 16,19 |

| | | | |
|---|---|---|---|
| mat'l. code | surface ISO 1302 | tolerance ISO 406 ISO 1101 | projection |
| ltr / ecn no / dr / date | tolerances unless otherwise specified | | |
| BE | angles | linear | .XX±.01/.X±0.3 |
| | | | .XXX±.005/.XX±0.13 |
| | 0°±2° | | .XXXX±.0020/.XXX±0.051 |
| | dr | M. CORNMAN | 8/21/90 |
| | engr | M. SMYK | 8/21/90 |
| | chr | M. SMYK | 8/21/90 |
| | appd | M. SMYK | 8/21/90 |
| sheet index / revision sheet | | | |

INCH/MM

scale 1:1

product family: QUICKIE

title: HEADER, QUICKIE SEA-HORSE, VERTICAL

dwg no: 65863 sheet 4 of 23 size A3

type: Product Customer Drawing

Copyright FCI

FCIconnect.com

form: A3

| PRODUCT NO NOTES 12,13 | SIZE | LATCH NOTE 8 | DIM B | DIM D | TERMINAL PLATING | STYLE | |
|---|---|---|---|---|---|---|---|
| 65863–073 | 2x13 | STD | 1.200/30,480 | .105/ 2,67 | 30u"/0.76u MIN (NOTE 17) OVER 50u"/1.27u Ni | D | |
| –074 | | | | .105/ 2,67 | 120u"~200u"/3.04um~5.08umTIN/LEAD | | NOTE 16,19 |
| –075 | | | | .150/ 3,81 | 30u"/0.76u MIN (NOTE 17) OVER 50u"/1.27u Ni | | |
| –076 | | | | .150/ 3,81 | 120u"~200u"/3.04um~5.08umTIN/LEAD | | NOTE 16,19 |
| –077 | | | | .675/17,15 | 30u"/0.76u MIN (NOTE 17) OVER 50u"/1.27u Ni | | |
| –078 | 2x13 | | 1.200/30,480 | .675/17,15 | 120u"~200u"/3.04um~5.08umTIN/LEAD | | NOTE 16,19 |
| –079 | 2x17 | | 1.600/40,640 | .105/ 2,67 | 30u"/0.76u MIN (NOTE 17) OVER 50u"/1.27u Ni | | |
| –080 | | | | .105/ 2,67 | 120u"~200u"/3.04um~5.08umTIN/LEAD | | NOTE 16,19 |
| –081 | | | | .150/ 3,81 | 30u"/0.76u MIN (NOTE 17) OVER 50u"/1.27u Ni | | |
| –082 | | | | .150/ 3,81 | 120u"~200u"/3.04um~5.08umTIN/LEAD | | NOTE 16,19 |
| –083 | | | | .675/17,15 | 30u"/0.76u MIN (NOTE 17) OVER 50u"/1.27u Ni | | |
| –084 | 2x17 | | 1.600/40,640 | .675/17,15 | 120u"~200u"/3.04um~5.08umTIN/LEAD | | NOTE 16,19 |
| –085 | 2x20 | | 1.900/48,260 | .105/ 2,67 | 30u"/0.76u MIN (NOTE 17) OVER 50u"/1.27u Ni | | |
| –086 | | | | .105/ 2,67 | 120u"~200u"/3.04um~5.08umTIN/LEAD | | NOTE 16,19 |
| –087 | | | | .150/ 3,81 | 30u"/0.76u MIN (NOTE 17) OVER 50u"/1.27u Ni | | |
| –088 | | | | .150/ 3,81 | 120u"~200u"/3.04um~5.08umTIN/LEAD | | NOTE 16,19 |
| –089 | | | | .675/17,15 | 30u"/0.76u MIN (NOTE 17) OVER 50u"/1.27u Ni | | |
| –090 | 2x20 | | 1.900/48,260 | .675/17,15 | 120u"~200u"/3.04um~5.08umTIN/LEAD | | NOTE 16,19 |
| –091 | 2x25 | | 2.400/60,960 | .105/ 2,67 | 30u"/0.76u MIN (NOTE 17) OVER 50u"/1.27u Ni | | |
| –092 | | | | .105/ 2,67 | 120u"~200u"/3.04um~5.08umTIN/LEAD | | NOTE 16,19 |
| –093 | | | | .150/ 3,81 | 30u"/0.76u MIN (NOTE 17) OVER 50u"/1.27u Ni | | |
| –094 | | | | .150/ 3,81 | 120u"~200u"/3.04um~5.08umTIN/LEAD | | NOTE 16,19 |
| –095 | | | | .675/17,15 | 30u"/0.76u MIN (NOTE 17) OVER 50u"/1.27u Ni | | |
| –096 | 2x25 | STD | 2.400/60,960 | .675/17,15 | 120u"~200u"/3.04um~5.08umTIN/LEAD | | NOTE 16,19 |
| –097 | 2x30 | NO | 2.900/73,660 | .105/ 2,67 | 30u"/0.76u MIN (NOTE 17) OVER 50u"/1.27u Ni | | |
| –098 | | | | .105/ 2,67 | 120u"~200u"/3.04um~5.08umTIN/LEAD | | NOTE 16,19 |
| –099 | | | | .150/ 3,81 | 30u"/0.76u MIN (NOTE 17) OVER 50u"/1.27u Ni | | |
| –100 | | | | .150/ 3,81 | 120u"~200u"/3.04um~5.08umTIN/LEAD | | NOTE 16,19 |
| –101 | | | | .675/17,15 | 30u"/0.76u MIN (NOTE 17) OVER 50u"/1.27u Ni | | |
| –102 | | NO | | .675/17,15 | 120u"~200u"/3.04um~5.08umTIN/LEAD | | NOTE 16,19 |
| –103 | | STD | | .105/ 2,67 | 30u"/0.76u MIN (NOTE 17) OVER 50u"/1.27u Ni | | |
| –104 | | | | .105/ 2,67 | 120u"~200u"/3.04um~5.08umTIN/LEAD | | NOTE 16,19 |
| –105 | | | | .150/ 3,81 | 30u"/0.76u MIN (NOTE 17) OVER 50u"/1.27u Ni | | |
| –106 | | | | .150/ 3,81 | 120u"~200u"/3.04um~5.08umTIN/LEAD | | NOTE 16,19 |
| –107 | | | | .675/17,15 | 30u"/0.76u MIN (NOTE 17) OVER 50u"/1.27u Ni | | |
| 65863–108 | 2x30 | STD | 2.900/73,660 | .675/17,15 | 120u"~200u"/3.04um~5.08umTIN/LEAD | D | NOTE 16,19 |

| | | | | | |
|---|---|---|---|---|---|
| mat'l. code | | surface ISO 1302 ✓ | tolerance ISO 406 ISO 1101 | projection | product family QUICKIE |
| ltr / ecn no / dr / date | | tolerances unless otherwise specified | | | title |
| BE | | angles | linear | INCH/MM | HEADER, QUICKIE SEA–HORSE, VERTICAL |
| | | 0°±2° | .XX±.01/.X±0.3 / .XXX±.005/.XX±0.13 / .XXXX±.0020/.XXX±0.051 | scale 1:1 | |
| | | dr | M. CORNMAN | 8/21/90 | dwg no 65863 sheet 5 of 23 size A3 |
| | | engr | M. SMYK | 8/21/90 | |
| | | chr | M. SMYK | 8/21/90 | |
| | | appd | M. SMYK | 8/21/90 | type Product Customer Drawing |
| sheet index | revision sheet | | | | |

Copyright FCI
FCIconnect.com

| PRODUCT NO NOTE 12,13 | SIZE | LATCH NOTE 8 | DIM B | DIM D | TERMINAL PLATING | STYLE |
|---|---|---|---|---|---|---|
| 65863–109 | 2x5 | NO | .400/10,160 | .105/ 2,67 | 30u"/0.76u MIN (NOTE 17) OVER 50u"/1.27u Ni | A |
| –110 | 2x7 | | .600/15,240 | | | C |
| –111 | 2x8 | | .700/17,780 | | | D |
| –112 | 2x10 | | .900/22,860 | | | |
| –113 | 2x13 | | 1.200/30,480 | | | |
| –114 | 2x17 | | 1.600/40,640 | | | |
| –115 | 2x20 | | 1.900/48,260 | | | |
| –116 | 2x25 | | 2.400/60,960 | | | |
| –117 | 2x30 | NO | 2.900/73,660 | | | D |
| –118 | 2x5 | STD | .400/10,160 | | | A |
| –119 | 2x7 | | .600/15,240 | | | C |
| –120 | 2x8 | | .700/17,780 | | | D |
| –121 | 2x10 | | .900/22,860 | | | |
| –122 | 2x13 | | 1.200/30,480 | | | |
| –123 | 2x17 | | 1.600/40,640 | | | |
| –124 | 2x20 | | 1.900/48,260 | | | |
| –125 | 2x25 | | 2.400/60,960 | | | |
| –126 | 2x30 | STD | 2.900/73,660 | .105/ 2,67 | | |
| –127 | 2x20 | NO | 1.900/48,260 | .150/ 3,81 | | |
| –128 | 2x20 | STD | 1.900/48,260 | | | D |
| –129 | 2x5 | NO | .400/10,160 | | | A |
| –130 | 2x7 | | .600/15,240 | | | C |
| –131 | 2x8 | | .700/17,780 | | | D |
| –132 | 2x10 | | .900/22,860 | | | |
| –133 | 2x13 | | 1.200/30,480 | | | |
| –134 | 2x17 | | 1.600/40,640 | | | |
| –135 | 2x20 | | 1.900/48,260 | | | |
| –136 | 2x25 | | 2.400/60,960 | | | |
| –137 | 2x30 | NO | 2.900/73,660 | | | D |
| –138 | 2x5 | STD | .400/10,160 | | | A |
| –139 | 2x7 | | .600/15,240 | | | C |
| –140 | 2x8 | | .700/17,780 | | | D |
| –141 | 2x10 | | .900/22,860 | | | |
| –142 | 2x13 | | 1.200/30,480 | | | |
| –143 | 2x17 | | 1.600/40,640 | | | |
| 65863–144 | 2x20 | STD | 1.900/48,260 | .150/ 3,81 | 30u"/0.76u MIN (NOTE 17) OVER 50u"/1.27u Ni | D |

| | | | |
|---|---|---|---|
| mat'l. code | surface ISO 1302 ✓ | tolerance ISO 406 ISO 1101 | projection |
| ltr / ecn no / dr / date | tolerances unless otherwise specified | | |
| BE | angles 0°±2° | linear .XX±.01/.X±0.3; .XXX±.005/.XX±0.13; .XXXX±.0020/.XXX±0.051 | INCH/MM |
| | | | scale 1:1 |
| | dr M. CORNMAN 8/21/90 | | |
| | engr M. SMYK 8/21/90 | | |
| | chr M. SMYK 8/21/90 | | |
| | appd M. SMYK 8/21/90 | | |
| sheet index / revision sheet | | | |

product family: QUICKIE

title: HEADER, QUICKIE SEA–HORSE, VERTICAL

dwg no: 65863 sheet 6 of 23 size A3

type: Product Customer Drawing

FCIconnect.com
Copyright FCI

| PRODUCT NO NOTE 12,13 | SIZE | LATCH NOTE 8 | DIM B | DIM D | TERMINAL PLATING | STYLE | |
|---|---|---|---|---|---|---|---|
| 65863–145 | 2x25 | STD | 2.400/60,960 | .150/ 3,81 | 30u"/0.76u MIN (NOTE 17) OVER 50u"/1.27u Ni | D | |
| –146 | 2x30 | STD | 2.900/73,660 | .150/ 3,81 | 30u"/0.76u MIN (NOTE 17) OVER 50u"/1.27u Ni | D | |
| –147 | 2x5 | NO | .400/10,160 | .675/17,15 | 15u"/0.38u MIN (NOTE 17) OVER 50u"/1.27u Ni | A | |
| –148 | 2x7 | | .600/15,240 | | | C | |
| –149 | 2x8 | | .700/17,780 | | | D | |
| –150 | 2x10 | | .900/22,860 | | | | |
| –151 | 2x13 | | 1.200/30,480 | | | | |
| –152 | 2x17 | | 1.600/40,640 | | | | |
| –153 | 2x20 | | 1.900/48,260 | | | | |
| –154 | 2x25 | | 2.400/60,960 | | | | |
| –155 | 2x30 | NO | 2.900/73,660 | | | D | |
| –156 | 2x5 | STD | .400/10,160 | | | A | |
| –157 | 2x7 | | .600/15,240 | | | C | |
| –158 | 2x8 | | .700/17,780 | | | D | |
| –159 | 2x10 | | .900/22,860 | | | | |
| –160 | 2x13 | | 1.200/30,480 | | | | |
| –161 | 2x17 | | 1.600/40,640 | | | | |
| –162 | 2x20 | | 1.900/48,260 | | | | |
| –163 | 2x25 | | 2.400/60,960 | | | | |
| –164 | 2x30 | STD | 2.900/73,660 | .675/17,15 | 15u"/0.38u MIN (NOTE 17) OVER 50u"/1.27u Ni | D | |
| –165 | 2x5 | LP | .400/10,160 | .105/ 2,67 | 30u"/0.76u MIN (NOTE 17) OVER 50u"/1.27u Ni | A | |
| –166 | | | | .105/ 2,67 | 120u"~200u"/3.04um~5.08umTIN/LEAD | | NOTE 16,19 |
| –167 | | | | .150/ 3,81 | 30u"/0.76u MIN (NOTE 17) OVER 50u"/1.27u Ni | | |
| –168 | | | | .150/ 3,81 | 120u"~200u"/3.04um~5.08umTIN/LEAD | | NOTE 16,19 |
| –169 | | | | .675/17,15 | 30u"/0.76u MIN (NOTE 17) OVER 50u"/1.27u Ni | | |
| –170 | 2x5 | | .400/10,160 | .675/17,15 | 120u"~200u"/3.04um~5.08umTIN/LEAD | A | NOTE 16,19 |
| –171 | 2x7 | | .600/15,240 | .105/ 2,67 | 30u"/0.76u MIN (NOTE 17) OVER 50u"/1.27u Ni | C | |
| –172 | | | | .105/ 2,67 | 120u"~200u"/3.04um~5.08umTIN/LEAD | | NOTE 16,19 |
| –173 | | | | .150/ 3,81 | 30u"/0.76u MIN (NOTE 17) OVER 50u"/1.27u Ni | | |
| –174 | | | | .150/ 3,81 | 120u"~200u"/3.04um~5.08umTIN/LEAD | | NOTE 16,19 |
| –175 | | | | .675/17,15 | 30u"/0.76u MIN (NOTE 17) OVER 50u"/1.27u Ni | | |
| –176 | 2x7 | | .600/15,240 | .675/17,15 | 120u"~200u"/3.04um~5.08umTIN/LEAD | C | NOTE 16,19 |
| –177 | 2x8 | | .700/17,780 | .105/ 2,67 | 30u"/0.76u MIN (NOTE 17) OVER 50u"/1.27u Ni | D | |
| –178 | 2x8 | | .700/17,780 | .105/ 2,67 | 120u"~200u"/3.04um~5.08umTIN/LEAD | D | NOTE 16,19 |
| –179 | 2x8 | | .700/17,780 | .150/ 3,81 | 30u"/0.76u MIN (NOTE 17) OVER 50u"/1.27u Ni | D | |
| 65863–180 | 2x8 | LP | .700/17,780 | .150/ 3,81 | 120u"~200u"/3.04um~5.08umTIN/LEAD | D | NOTE 16,19 |

| | | | | | |
|---|---|---|---|---|---|
| mat'l. code | | surface ISO 1302 | tolerance ISO 406 ISO 1101 | projection | product family QUICKIE |
| ltr ecn no dr date | | tolerances unless otherwise specified | | | title |
| BE | angles | linear | .XX±.01/.X±0.3 | INCH/MM | HEADER, QUICKIE SEA–HORSE, VERTICAL |
| | 0°±2° | | .XXX±.005/.XX±0.13 | | |
| | | | .XXXX±.0020/.XXX±0.051 | scale 1:1 | |
| | dr | M. CORNMAN | 8/21/90 | | dwg no 65863 sheet 7 of 23 size A3 |
| | engr | M. SMYK | 8/21/90 | | |
| | chr | M. SMYK | 8/21/90 | | |
| | appd | M. SMYK | 8/21/90 | | type Product Customer Drawing |
| sheet index | revision sheet | | | | |

Copyright FCI

FCIconnect.com

form: A3

| PRODUCT NO NOTE 12,13 | SIZE | LATCH NOTE 8 | DIM B | DIM D | TERMINAL PLATING | STYLE | |
|---|---|---|---|---|---|---|---|
| 65863–181 | 2x8 | LP | .700/17,780 | .675/17,15 | 30u"/0.76u MIN (NOTE 17) OVER 50u"/1.27u Ni | D | |
| –182 | 2x8 | | .700/17,780 | .675/17,15 | 120u"~200u"/3.04um~5.08umTIN/LEAD | | NOTE 16,19 |
| –183 | 2x10 | | .900/22,860 | .105/ 2,67 | 30u"/0.76u MIN (NOTE 17) OVER 50u"/1.27u Ni | | |
| –184 | | | | .105/ 2,67 | 120u"~200u"/3.04um~5.08umTIN/LEAD | | NOTE 16,19 |
| –185 | | | | .150/ 3,81 | 30u"/0.76u MIN (NOTE 17) OVER 50u"/1.27u Ni | | |
| –186 | | | | .150/ 3,81 | 120u"~200u"/3.04um~5.08umTIN/LEAD | | NOTE 16,19 |
| –187 | | | | .675/17,15 | 30u"/0.76u MIN (NOTE 17) OVER 50u"/1.27u Ni | | |
| –188 | 2x10 | | .900/22,860 | .675/17,15 | 120u"~200u"/3.04um~5.08umTIN/LEAD | | NOTE 16,19 |
| –189 | 2x13 | | 1.200/30,480 | .105/ 2,67 | 30u"/0.76u MIN (NOTE 17) OVER 50u"/1.27u Ni | | |
| –190 | | | | .105/ 2,67 | 120u"~200u"/3.04um~5.08umTIN/LEAD | | NOTE 16,19 |
| –191 | | | | .150/ 3,81 | 30u"/0.76u MIN (NOTE 17) OVER 50u"/1.27u Ni | | |
| –192 | | | | .150/ 3,81 | 120u"~200u"/3.04um~5.08umTIN/LEAD | | NOTE 16,19 |
| –193 | | | | .675/17,15 | 30u"/0.76u MIN (NOTE 17) OVER 50u"/1.27u Ni | | |
| –194 | 2x13 | | 1.200/30,480 | .675/17,15 | 120u"~200u"/3.04um~5.08umTIN/LEAD | | NOTE 16,19 |
| –195 | 2x17 | | 1.600/40,640 | .105/ 2,67 | 30u"/0.76u MIN (NOTE 17) OVER 50u"/1.27u Ni | | |
| –196 | | | | .105/ 2,67 | 120u"~200u"/3.04um~5.08umTIN/LEAD | | NOTE 16,19 |
| –197 | | | | .150/ 3,81 | 30u"/0.76u MIN (NOTE 17) OVER 50u"/1.27u Ni | | |
| –198 | | | | .150/ 3,81 | 120u"~200u"/3.04um~5.08umTIN/LEAD | | NOTE 16,19 |
| –199 | | | | .675/17,15 | 30u"/0.76u MIN (NOTE 17) OVER 50u"/1.27u Ni | | |
| –200 | 2x17 | | 1.600/40,640 | .675/17,15 | 120u"~200u"/3.04um~5.08umTIN/LEAD | | NOTE 16,19 |
| –201 | 2x20 | | 1.900/48,260 | .105/ 2,67 | 30u"/0.76u MIN (NOTE 17) OVER 50u"/1.27u Ni | | |
| –202 | | | | .105/ 2,67 | 120u"~200u"/3.04um~5.08umTIN/LEAD | | NOTE 16,19 |
| –203 | | | | .150/ 3,81 | 30u"/0.76u MIN (NOTE 17) OVER 50u"/1.27u Ni | | |
| –204 | | | | .150/ 3,81 | 120u"~200u"/3.04um~5.08umTIN/LEAD | | NOTE 16,19 |
| –205 | | | | .675/17,15 | 30u"/0.76u MIN (NOTE 17) OVER 50u"/1.27u Ni | | |
| –206 | 2x20 | | 1.900/48,260 | .675/17,15 | 120u"~200u"/3.04um~5.08umTIN/LEAD | | NOTE 16,19 |
| –207 | 2x25 | | 2.400/60,960 | .105/ 2,67 | 30u"/0.76u MIN (NOTE 17) OVER 50u"/1.27u Ni | | |
| –208 | | | | .105/ 2,67 | 120u"~200u"/3.04um~5.08umTIN/LEAD | | NOTE 16,19 |
| –209 | | | | .150/ 3,81 | 30u"/0.76u MIN (NOTE 17) OVER 50u"/1.27u Ni | | |
| –210 | | | | .150/ 3,81 | 120u"~200u"/3.04um~5.08umTIN/LEAD | | NOTE 16,19 |
| –211 | | | | .675/17,15 | 30u"/0.76u MIN (NOTE 17) OVER 50u"/1.27u Ni | | |
| –212 | 2x25 | | 2.400/60,960 | .675/17,15 | 120u"~200u"/3.04um~5.08umTIN/LEAD | | NOTE 16,19 |
| –213 | 2x30 | | 2.900/73,660 | .105/ 2,67 | 30u"/0.76u MIN (NOTE 17) OVER 50u"/1.27u Ni | | |
| –214 | 2x30 | | 2.900/73,660 | .105/ 2,67 | 120u"~200u"/3.04um~5.08umTIN/LEAD | | NOTE 16,19 |
| –215 | 2x30 | | 2.900/73,660 | .150/ 3,81 | 30u"/0.76u MIN (NOTE 17) OVER 50u"/1.27u Ni | | |
| 65863–216 | 2x30 | LP | 2.900/73,660 | .150/ 3,81 | 120u"~200u"/3.04um~5.08umTIN/LEAD | D | NOTE 16,19 |

| | | | |
|---|---|---|---|
| mat'l. code | surface ISO 1302 | tolerance ISO 406 ISO 1101 | projection |
| ltr / ecn no / dr / date | tolerances unless otherwise specified | | |
| BE | angles 0°±2° | linear .XX±.01/.X±0.3; .XXX±.005/.XX±0.13; .XXXX±.0020/.XXX±0.051 | INCH/MM |
| | | | scale 1:1 |
| | dr M. CORNMAN 8/21/90 | | |
| | engr M. SMYK 8/21/90 | | |
| | chr M. SMYK 8/21/90 | | |
| | appd M. SMYK 8/21/90 | | |
| sheet index / revision sheet | | | |

product family: QUICKIE

title: HEADER, QUICKIE SEA–HORSE, VERTICAL

dwg no: 65863 sheet 8 of 23 size A3

type: Product Customer Drawing

Copyright FCI

FCIconnect.com

| PRODUCT NO NOTES 12,13 | SIZE | LATCH NOTE 8 | DIM B | DIM D | TERMINAL PLATING | STYLE |
|---|---|---|---|---|---|---|
| 65863-217 | 2x30 | LP | 2.900/73,660 | .675/17,15 | 30u"/0.76u MIN (NOTE 17) OVER 50u"/1.27u Ni | D |
| -218 | 2x30 | | 2.900/73,660 | .675/17,15 | 120u"~200u"/3.04um~5.08umTIN/LEAD | D |
| -219 | 2x5 | | .400/10,160 | .105/ 2,67 | 30u"/0.76u MIN (NOTE 17) OVER 50u"/1.27u Ni | A |
| -220 | 2x7 | | .600/15,240 | | | C |
| -221 | 2x8 | | .700/17,780 | | | D |
| -222 | 2x10 | | .900/22,860 | | | |
| -223 | 2x13 | | 1.200/30,480 | | | |
| -224 | 2x17 | | 1.600/40,640 | | | |
| -225 | 2x20 | | 1.900/48,260 | | | |
| -226 | 2x25 | | 2.400/60,960 | | | |
| -227 | 2x30 | | 2.900/73,660 | .105/ 2,67 | | |
| -228 | 2x20 | | 1.900/48,260 | .150/ 3,81 | | D |
| -229 | 2x5 | | .400/10,160 | | | A |
| -230 | 2x7 | | .600/15,240 | | | C |
| -231 | 2x8 | | .700/17,780 | | | D |
| -232 | 2x10 | | .900/22,860 | | | |
| -233 | 2x13 | | 1.200/30,480 | | | |
| -234 | 2x17 | | 1.600/40,640 | | | |
| -235 | 2x20 | | 1.900/48,260 | | | |
| -236 | 2x25 | | 2.400/60,960 | | | |
| -237 | 2x30 | | 2.900/73,660 | .150/ 3,81 | 30u"/0.76u MIN (NOTE 17) OVER 50u"/1.27u Ni | D |
| -238 | 2x5 | | .400/10,160 | .675/17,15 | 15u"/0.38u MIN (NOTE 17) OVER 50u"/1.27u Ni | A |
| -239 | 2x7 | | .600/15,240 | | | C |
| -240 | 2x8 | | .700/17,780 | | | D |
| -241 | 2x10 | | .900/22,860 | | | |
| -242 | 2x13 | | 1.200/30,480 | | | |
| -243 | 2x17 | | 1.600/40,640 | | | |
| -244 | 2x20 | | 1.900/48,260 | | | |
| -245 | 2x25 | | 2.400/60,960 | | | |
| -246 | 2x30 | LP | 2.900/73,660 | .675/17,15 | 15u"/0.38u MIN (NOTE 17) OVER 50u"/1.27u Ni | D |
| -247 | 2x5 | NO | .400/10,160 | .105/ 2,67 | 30u"/0.76u MIN (NOTE 17) OVER 50u"/1.27u Ni | A |
| -248 | 2x7 | | .600/15,240 | | | C |
| -249 | 2x8 | | .700/17,780 | | | D |
| -250 | 2x10 | | .900/22,860 | | | D |
| -251 | 2x13 | | 1.200/30,480 | | | D |
| 65863-252 | 2x17 | NO | 1.600/40,640 | .105/ 2,67 | 30u"/0.76u MIN (NOTE 17) OVER 50u"/1.27u Ni | D |

NOTE 16,19

| | | | | | |
|---|---|---|---|---|---|
| mat'l. code | | | surface ISO 1302 √ | tolerance ISO 406 ISO 1101 | projection |
| ltr | ecn no | dr | date | tolerances unless otherwise specified | |
| BE | | | | angles / linear | .XX±.01/.X±0.3 | INCH/MM |
| | | | | | .XXX±.005/.XX±0.13 | |
| | | | | 0°±2° | .XXXX±.0020/.XXX±0.051 | scale 1:1 |
| | | | | dr | M. CORNMAN | 8/21/90 |
| | | | | engr | M. SMYK | 8/21/90 |
| | | | | chr | M. SMYK | 8/21/90 |
| | | | | appd | M. SMYK | 8/21/90 |
| sheet index | revision sheet | | | | | |

product family: QUICKIE

title: HEADER, QUICKIE SEA-HORSE, VERTICAL

dwg no: 65863 sheet 9 of 23 size A3

type: Product Customer Drawing

Copyright FCI

FCIconnect.com

| PRODUCT NO NOTE 12,13 | SIZE | LATCH NOTE 8 | DIM B | DIM D | TERMINAL PLATING | STYLE |
|---|---|---|---|---|---|---|
| 65863-253 | 2x20 | NO | 1.900/48,260 | .105/ 2,67 | 30u"/0.76u MIN (NOTE 17) OVER 50u"/1.27u Ni | D |
| -254 | 2x25 | | 2.400/60,960 | .105/ 2,67 | | D |
| -255 | 2x30 | | 2.900/73,660 | .105/ 2,67 | | D |
| -256 | 2x5 | | .400/10,160 | .675/17,15 | | A |
| -257 | 2x7 | | .600/15,240 | | | C |
| -258 | 2x8 | | .700/17,780 | | | D |
| -259 | 2x10 | | .900/22,860 | | | |
| -260 | 2x13 | | 1.200/30,480 | | | |
| -261 | 2x17 | | 1.600/40,640 | | | |
| -262 | 2x20 | | 1.900/48,260 | | | |
| -263 | 2x25 | | 2.400/60,960 | | | |
| -264 | 2x30 | NO | 2.900/73,660 | .675/17,15 | | D |
| -265 | 2x5 | STD | .400/10,160 | .105/ 2,67 | | A |
| -266 | 2x7 | | .600/15,240 | | | C |
| -267 | 2x8 | | .700/17,780 | | | D |
| -268 | 2x10 | | .900/22,860 | | | |
| -269 | 2x13 | | 1.200/30,480 | | | |
| -270 | 2x17 | | 1.600/40,640 | | | |
| -271 | 2x20 | | 1.900/48,260 | | | |
| -272 | 2x25 | | 2.400/60,960 | | | |
| -273 | 2x30 | | 2.900/73,660 | .105/ 2,67 | | D |
| -274 | 2x5 | | .400/10,160 | .675/17,15 | | A |
| -275 | 2x7 | | .600/15,240 | | | C |
| -276 | 2x8 | | .700/17,780 | | | D |
| -277 | 2x10 | | .900/22,860 | | | |
| -278 | 2x13 | | 1.200/30,480 | | | |
| -279 | 2x17 | | 1.600/40,640 | | | |
| -280 | 2x20 | | 1.900/48,260 | | | |
| -281 | 2x25 | | 2.400/60,960 | | | |
| -282 | 2x30 | STD | 2.900/73,660 | .675/17,15 | | D |
| -283 | 2x5 | LP | .400/10,160 | .105/ 2,67 | | A |
| -284 | 2x7 | | .600/15,240 | | | C |
| -285 | 2x8 | | .700/17,780 | | | D |
| -286 | 2x10 | | .900/22,860 | | | D |
| -287 | 2x13 | | 1.200/30,480 | | | D |
| 65863-288 | 2x17 | LP | 1.600/40,640 | .105/ 2,67 | 30u"/0.76u MIN (NOTE 17) OVER 50u"/1.27u Ni | D |

FCIconnect.com

Copyright FCI

| | | | | | | |
|---|---|---|---|---|---|---|
| mat'l. code | | | | surface ISO 1302 ✓ | tolerance ISO 406 ISO 1101 | projection |
| ltr | ecn no | dr | date | tolerances unless otherwise specified | | |
| BE | | | | angles | linear | .XX±.01/.X±0.3 |
| | | | | | | .XXX±.005/.XX±0.13 |
| | | | | 0°±2° | | .XXXX±.0020/.XXX±0.051 |
| | | | | dr | M. CORNMAN | 8/21/90 |
| | | | | engr | M. SMYK | 8/21/90 |
| | | | | chr | M. SMYK | 8/21/90 |
| | | | | appd | M. SMYK | 8/21/90 |
| sheet index | revision sheet | | | | | |

INCH/MM

scale 1:1

FCI

product family: QUICKIE

title: HEADER, QUICKIE SEA-HORSE, VERTICAL

dwg no: 65863 sheet 10 of 22 size A3

type: Product Customer Drawing

form: A3

PDS: Rev :BE STATUS: Released Printed: Jun 19, 2014

| PRODUCT NO NOTE 12,13 | SIZE | LATCH NOTE 8 | DIM B | DIM D | TERMINAL PLATING | STYLE |
|---|---|---|---|---|---|---|
| 65863-289 | 2x20 | LP | 1.900/48,260 | .105/ 2,67 | 30u"/0.76u MIN (NOTE 17) OVER 50u"/1.27u Ni | D |
| -290 | 2x25 | | 2.400/60,960 | .105/ 2,67 | | D |
| -291 | 2x30 | | 2.900/73,660 | .105/ 2,67 | | D |
| -292 | 2x5 | | .400/10,160 | .675/17,15 | | A |
| -293 | 2x7 | | .600/15,240 | | | C |
| -294 | 2x8 | | .700/17,780 | | | D |
| -295 | 2x10 | | .900/22,860 | | | |
| -296 | 2x13 | | 1.200/30,480 | | | |
| -297 | 2x17 | | 1.600/40,640 | | | |
| -298 | 2x20 | | 1.900/48,260 | | | |
| -299 | 2x25 | | 2.400/60,960 | | | |
| -300 | 2x30 | LP | 2.900/73,660 | .675/17,15 | 30u"/0.76u MIN (NOTE 17) OVER 50u"/1.27u Ni | D |
| -301 | 2x5 | NO | .400/10,160 | .105/ 2,67 | 15u"/0.38u MIN (NOTE 17) OVER 50u"/1.27u Ni | A |
| -302 | 2x7 | | .600/15,240 | | | C |
| -303 | 2x8 | | .700/17,780 | | | D |
| -304 | 2x10 | | .900/22,860 | | | |
| -305 | 2x13 | | 1.200/30,480 | | | |
| -306 | 2x17 | | 1.600/40,640 | | | |
| -307 | 2x20 | | 1.900/48,260 | | | |
| -308 | 2x25 | | 2.400/60,960 | | | |
| -309 | 2x30 | | 2.900/73,660 | .105/ 2,67 | | D |
| -310 | 2x5 | | .400/10,160 | .150/ 3,81 | | A |
| -311 | 2x7 | | .600/15,240 | | | C |
| -312 | 2x8 | | .700/17,780 | | | D |
| -313 | 2x10 | | .900/22,860 | | | |
| -314 | 2x13 | | 1.200/30,480 | | | |
| -315 | 2x17 | | 1.600/40,640 | | | |
| -316 | 2x20 | | 1.900/48,260 | | | |
| -317 | 2x25 | | 2.400/60,960 | | | |
| -318 | 2x30 | NO | 2.900/73,660 | .150/ 3,81 | | D |
| -319 | 2x5 | STD | .400/10,160 | .105/ 2,67 | | A |
| -320 | 2x7 | | .600/15,240 | | | C |
| -321 | 2x8 | | .700/17,780 | | | D |
| -322 | 2x10 | | .900/22,860 | | | D |
| -323 | 2x13 | | 1.200/30,480 | | | D |
| 65863-324 | 2x17 | STD | 1.600/40,640 | .105/ 2,67 | 15u"/0.38u MIN (NOTE 17) OVER 50u"/1.27u Ni | D |

FCIconnect.com
Copyright FCI

| | | | | | | |
|---|---|---|---|---|---|---|
| mat'l. code | | | | surface ISO 1302 √ | tolerance ISO 406 ISO 1101 | projection |
| ltr | ecn no | dr | date | tolerances unless otherwise specified | | |
| BE | | | | angles | linear .XX±.01/.X±0.3 | INCH/MM |
| | | | | | .XXX±.005/.XX±0.13 | |
| | | | | 0°±2° | .XXXX±.0020/.XXX±0.051 | scale 1:1 |
| | | | | dr | M. CORNMAN | 8/21/90 |
| | | | | engr | M. SMYK | 8/21/90 |
| | | | | chr | M. SMYK | 8/21/90 |
| | | | | appd | M. SMYK | 8/21/90 |
| sheet index | revision sheet | | | | | |

product family: QUICKIE

title: HEADER, QUICKIE SEA-HORSE, VERTICAL

dwg no: 65863 sheet11 of23 size A3

type: Product Customer Drawing

form: A3

| PRODUCT NO NOTE 12,13 | SIZE | LATCH NOTE 8 | DIM B | DIM D | TERMINAL PLATING | STYLE | |
|---|---|---|---|---|---|---|---|
| 65863-325 | 2x20 | STD | 1.900/48,260 | .105/ 2,67 | 15u"/0.38u MIN (NOTE 17) OVER 50u"/1.27u Ni | D | |
| -326 | 2x25 | | 2.400/60,960 | .105/ 2,67 | | D | |
| -327 | 2x30 | | 2.900/73,660 | .105/ 2,67 | | D | |
| -328 | 2x5 | | .400/10,160 | .150/ 3,81 | | A | |
| -329 | 2x7 | | .600/15,240 | | | C | |
| -330 | 2x8 | | .700/17,780 | | | D | |
| -331 | 2x10 | | .900/22,860 | | | | |
| -332 | 2x13 | | 1.200/30,480 | | | | |
| -333 | 2x17 | | 1.600/40,640 | | | | |
| -334 | 2x20 | | 1.900/48,260 | | | | |
| -335 | 2x25 | | 2.400/60,960 | | | | |
| -336 | 2x30 | STD | 2.900/73,660 | .150/ 3,81 | | D | |
| -337 | 2x5 | LP | .400/10,160 | .105/ 2,67 | | A | |
| -338 | 2x7 | | .600/15,240 | | | C | |
| -339 | 2x8 | | .700/17,780 | | | D | |
| -340 | 2x10 | | .900/22,860 | | | | |
| -341 | 2x13 | | 1.200/30,480 | | | | |
| -342 | 2x17 | | 1.600/40,640 | | | | |
| -343 | 2x20 | | 1.900/48,260 | | | | |
| -344 | 2x25 | | 2.400/60,960 | | | | |
| -345 | 2x30 | | 2.900/73,660 | .105/ 2,67 | | D | |
| -346 | 2x5 | | .400/10,160 | .150/ 3,81 | | A | |
| -347 | 2x7 | | .600/15,240 | | | C | |
| -348 | 2x8 | | .700/17,780 | | | D | |
| -349 | 2x10 | | .900/22,860 | | | | |
| -350 | 2x13 | | 1.200/30,480 | | | | |
| -351 | 2x17 | | 1.600/40,640 | | | | |
| -352 | 2x20 | | 1.900/48,260 | | | | |
| -353 | 2x25 | | 2.400/60,960 | | | | |
| -354 | 2x30 | LP | 2.900/73,660 | .150/ 3,81 | 15u"/0.38u MIN (NOTE 17) OVER 50u"/1.27u Ni | D | |
| -355 | 2x5 | NO | .400/10,160 | .105/ 2,67 | 30u"/0.76u MIN (NOTE 17) OVER 50u"/1.27u Ni | B | |
| -356 | | NO | | | 15u"/0.38u MIN (NOTE 17) OVER 50u"/1.27u Ni | | |
| -357 | | NO | | | 30u"/0.76u MIN (NOTE 17) OVER 50u"/1.27u Ni | | |
| -358 | | NO | | | 120u''~200u''/3.04um~5.08umTIN/LEAD | | NOTE 16,19 |
| -359 | | STD | | | 30u"/0.76u MIN (NOTE 17) OVER 50u"/1.27u Ni | | |
| 65863-360 | 2x5 | STD | .400/10,160 | .105/ 2,67 | 15u"/0.38u MIN (NOTE 17) OVER 50u"/1.27u Ni | B | |

| | | | | | |
|---|---|---|---|---|---|
| mat'l. code | | | surface ISO 1302 √ | tolerance ISO 406 ISO 1101 | projection |
| ltr | ecn no | dr | date | tolerances unless otherwise specified | |
| BE | | | | angles | linear: .XX±.01/.X±0.3; .XXX±.005/.XX±0.13; .XXXX±.0020/.XXX±0.051 |
| | | | | 0°±2° | |
| | | | | dr | M. CORNMAN 8/21/90 |
| | | | | engr | M. SMYK 8/21/90 |
| | | | | chr | M. SMYK 8/21/90 |
| | | | | appd | M. SMYK 8/21/90 |
| sheet index | revision sheet | | | | |

INCH/MM

scale 1:1

product family: QUICKIE

title: HEADER, QUICKIE SEA-HORSE, VERTICAL

dwg no: 65863 sheet 12 of 23 size A3

type: Product Customer Drawing

FCIconnect.com

Copyright FCI

| PRODUCT NO NOTE 12,13 | SIZE | LATCH NOTE 8 | DIM B | DIM D | TERMINAL PLATING | STYLE | |
|---|---|---|---|---|---|---|---|
| 65863-361 | 2x5 | STD | .400/10,160 | .105/ 2,67 | 30u"/0.76u MIN (NOTE 17) OVER 50u"/1.27u Ni | B | |
| -362 | | STD | | | 120u-200u"/3.04u-5.08u TIN/LEAD | | NOTE 16,19 |
| -363 | | LP | | | 30u"/0.76u MIN (NOTE 17) OVER 50u"/1.27u Ni | | |
| -364 | | LP | | | 15u"/0.38u MIN (NOTE 17) OVER 50u"/1.27u Ni | | |
| -365 | | LP | | | 30u"/0.76u MIN (NOTE 17) OVER 50u"/1.27u Ni | | |
| -366 | | LP | | .105/ 2,67 | 120u-200u"/3.04u-5.08u TIN/LEAD | | NOTE 16,19 |
| -367 | | NO | | .150/ 3,81 | 30u"/0.76u MIN (NOTE 17) OVER 50u"/1.27u Ni | | |
| -368 | | NO | | | 15u"/0.38u MIN (NOTE 17) OVER 50u"/1.27u Ni | | |
| -369 | | NO | | | 30u"/0.76u MIN (NOTE 17) OVER 50u"/1.27u Ni | | |
| -370 | | NO | | | 120u-200u"/3.04u-5.08u TIN/LEAD | | NOTE 16,19 |
| -371 | | STD | | | 30u"/0.76u MIN (NOTE 17) OVER 50u"/1.27u Ni | | |
| -372 | | STD | | | 15u"/0.38u MIN (NOTE 17) OVER 50u"/1.27u Ni | | |
| -373 | | STD | | | 30u"/0.76u MIN (NOTE 17) OVER 50u"/1.27u Ni | | |
| -374 | | STD | | | 120u-200u"/3.04u-5.08u TIN/LEAD | | NOTE 16,19 |
| -375 | | LP | | | 30u"/0.76u MIN (NOTE 17) OVER 50u"/1.27u Ni | | |
| -376 | | LP | | | 15u"/0.38u MIN (NOTE 17) OVER 50u"/1.27u Ni | | |
| -377 | | LP | | | 30u"/0.76u MIN (NOTE 17) OVER 50u"/1.27u Ni | | |
| -378 | | LP | | .150/ 3,81 | 120u-200u"/3.04u-5.08u TIN/LEAD | | NOTE 16,19 |
| -379 | | NO | | .675/17,15 | 30u"/0.76u MIN (NOTE 17) OVER 50u"/1.27u Ni | | |
| -380 | | NO | | | 15u"/0.38u MIN (NOTE 17) OVER 50u"/1.27u Ni | | |
| -381 | | NO | | | 30u"/0.76u MIN (NOTE 17) OVER 50u"/1.27u Ni | | |
| -382 | | NO | | | 120u-200u"/3.04u-5.08u TIN/LEAD | | NOTE 16,19 |
| -383 | | STD | | | 30u"/0.76u MIN (NOTE 17) OVER 50u"/1.27u Ni | | |
| -384 | | STD | | | 15u"/0.38u MIN (NOTE 17) OVER 50u"/1.27u Ni | | |
| -385 | | STD | | | 30u"/0.76u MIN (NOTE 17) OVER 50u"/1.27u Ni | | |
| -386 | | STD | | | 120u-200u"/3.04u-5.08u TIN/LEAD | | NOTE 16,19 |
| -387 | | LP | | | 30u"/0.76u MIN (NOTE 17) OVER 50u"/1.27u Ni | | |
| -388 | | LP | | | 15u"/0.38u MIN (NOTE 17) OVER 50u"/1.27u Ni | | |
| -389 | | LP | | | 30u"/0.76u MIN (NOTE 17) OVER 50u"/1.27u Ni | | |
| -390 | 2x5 | LP | .400/10,160 | .675/17,15 | 120u-200u"/3.04u-5.08u TIN/LEAD | B | NOTE 16,19 |
| -391 | 2x9 | STD | .800/20,320 | .105/ 2,67 | 30u"/0.76u MIN (NOTE 17) OVER 50u"/1.27u Ni | D | |
| -392 | 2x9 | NO | .800/20,320 | .105/ 2,67 | 30u"/0.76u MIN (NOTE 17) OVER 50u"/1.27u Ni | D | |
| -393 | 2x9 | LP | .800/20,320 | .105/ 2,67 | 30u"/0.76u MIN (NOTE 17) OVER 50u"/1.27u Ni | D | |
| -394 | 2x5 | NO | .400/10.160 | .105/ 2,67 | 15u"/0.38u MIN (NOTE 17) OVER 50u"/1.27u Ni | A | |
| 65863-395 | 2x5 | STD | .400/10.160 | .105/ 2,67 | 15u"/0.38u MIN (NOTE 17) OVER 50u"/1.27u Ni | A | |

FCIconnect.com

Copyright FCI

| mat'l. code | | | | surface ISO 1302 | tolerance ISO 406 ISO 1101 | projection | product family QUICKIE |
|---|---|---|---|---|---|---|---|
| ltr | ecn no | dr | date | tolerances unless otherwise specified | | | title |
| BE | | | | angles | linear .XX±.01/.X±0.3 | INCH/MM | HEADER, QUICKIE SEA-HORSE, VERTICAL |
| | | | | | .XXX±.005/.XX±0.13 | | |
| | | | | 0°±2° | .XXXX±.0020/.XXX±0.051 | scale 1:1 | |
| | | | | dr | M. CORNMAN 8/21/90 | | dwg no 65863 sheet 13 of 23 size A3 |
| | | | | engr | M. SMYK 8/21/90 | | |
| | | | | chr | M. SMYK 8/21/90 | | |
| | | | | appd | M. SMYK 8/21/90 | | type Product Customer Drawing |
| sheet index | revision sheet | | | | | | |

form: A3

| PRODUCT NO NOTE 12,13 | SIZE | LATCH NOTE 8 | DIM B | DIM D | TERMINAL PLATING | STYLE |
|---|---|---|---|---|---|---|
| 65863-396 | 2x5 | LP | .400/10,160 | .105/ 2,67 | 15u"/0.38u MIN (NOTE 17) OVER 50u"/1.27u Ni | A |
| -397 | | NO | | .150/ 3,81 | | |
| -398 | | STD | | .150/ 3,81 | | |
| -399 | | LP | | .150/ 3,81 | | A |
| -400 | | NO | | .105/ 2,67 | | B |
| -401 | | STD | | .105/ 2,67 | | |
| -402 | | LP | | .105/ 2,67 | | |
| -403 | | NO | | .150/ 3,81 | | |
| -404 | | STD | | .150/ 3,81 | | |
| -405 | 2x5 | LP | .400/10,160 | .150/ 3,81 | | B |
| -406 | 2x7 | NO | .600/15.240 | .105/ 2,67 | | C |
| -407 | | STD | | .105/ 2,67 | | |
| -408 | | LP | | .105/ 2,67 | | |
| -409 | | NO | | .150/ 3,81 | | |
| -410 | | STD | | .150/ 3,81 | | |
| -411 | 2x7 | LP | .600/15.240 | .150/ 3,81 | | C |
| -412 | 2x8 | NO | .700/17.780 | .105/ 2,67 | | D |
| -413 | | STD | | .105/ 2,67 | | |
| -414 | | LP | | .105/ 2,67 | | |
| -415 | | NO | | .150/ 3,81 | | |
| -416 | | STD | | .150/ 3,81 | | |
| -417 | 2x8 | LP | .700/17.780 | .150/ 3,81 | | |
| -418 | 2x10 | NO | .900/22.860 | .105/ 2,67 | | |
| -419 | | STD | | .105/ 2,67 | | |
| -420 | | LP | | .105/ 2,67 | | |
| -421 | | NO | | .150/ 3,81 | | |
| -422 | | STD | | .150/ 3,81 | | |
| -423 | 2x10 | LP | .900/22.860 | .150/ 3,81 | | |
| -424 | 2x13 | NO | 1.200/30.480 | .105/ 2,67 | | |
| -425 | | STD | | .105/ 2,67 | | |
| -426 | | LP | | .105/ 2,67 | | |
| -427 | | NO | | .150/ 3,81 | | |
| -428 | | STD | | .150/ 3,81 | | |
| -429 | 2x13 | LP | 1.200/30.480 | .150/ 3,81 | | |
| 65863-430 | 2x17 | NO | 1.600/40.640 | .105/ 2,67 | 15u"/0.38u MIN (NOTE 17) OVER 50u"/1.27u Ni | D |

FCIconnect.com

Copyright FCI

| | | | | | |
|---|---|---|---|---|---|
| mat'l. code | | | surface ISO 1302 √ | tolerance ISO 406 ISO 1101 | projection |
| ltr | ecn no | dr | date | tolerances unless otherwise specified | |
| BE | | | | angles: 0°±2°; linear: .XX±.01/.X±0.3; .XXX±.005/.XX±0.13; .XXXX±.0020/.XXX±0.051 | INCH/MM |
| | | | | | scale 1:1 |
| | | | | dr M. CORNMAN 8/21/90 | |
| | | | | engr M. SMYK 8/21/90 | |
| | | | | chr M. SMYK 8/21/90 | |
| | | | | appd M. SMYK 8/21/90 | |
| sheet index | revision sheet | | | | |

product family: QUICKIE

title: HEADER, QUICKIE SEA-HORSE, VERTICAL

dwg no: 65863 sheet 14 of 23 size A3

type: Product Customer Drawing

form: A3

| PRODUCT NO NOTES 12,13 | SIZE | LATCH NOTE 8 | DIM B | DIM D | TERMINAL PLATING | PIN STYLE | MISSING | |
|---|---|---|---|---|---|---|---|---|
| 65863-431 | 2x17 | STD | 1.600/40.640 | .105/ 2,67 | 15u"/0.38u MIN (NOTE 17) OVER 50u"/1.27u Ni | D | NONE | |
| -432 | | LP | | .105/ 2,67 | | | | |
| -433 | | NO | | .150/ 3,81 | | | | |
| -434 | | STD | | .150/ 3,81 | | | | |
| -435 | 2x17 | LP | 1.600/40.640 | .150/ 3,81 | | | | |
| -436 | 2x20 | NO | 1.900/48.260 | .105/ 2,67 | | | | |
| -437 | | STD | | .105/ 2,67 | | | | |
| -438 | | LP | | .105/ 2,67 | | | | |
| -439 | | NO | | .150/ 3,81 | | | | |
| -440 | | STD | | .150/ 3,81 | | | | |
| -441 | 2x20 | LP | 1.900/48.260 | .150/ 3,81 | | | | |
| -442 | 2x25 | NO | 2.400/60.960 | .105/ 2,67 | | | | |
| -443 | | STD | | .105/ 2,67 | | | | |
| -444 | | LP | | .105/ 2,67 | | | | |
| -445 | | NO | | .150/ 3,81 | | | | |
| -446 | | STD | | .150/ 3,81 | | | | |
| -447 | 2x25 | LP | 2.400/60.960 | .150/ 3,81 | | | | |
| -448 | 2x30 | NO | 2.900/73.660 | .105/ 2,67 | | | | |
| -449 | | STD | | .105/ 2,67 | | | | |
| -450 | | LP | | .105/ 2,67 | | | | |
| -451 | | NO | | .150/ 3,81 | | | | |
| -452 | | STD | | .150/ 3,81 | | | | |
| -453 | 2x30 | LP | 2.900/73.660 | .150/ 3,81 | | | | |
| -454 | 2x12 | NO | 1.100/27.940 | .105/ 2,67 | | | | |
| -455 | 2x12 | STD | | | | | | |
| -456 | 2x12 | LP | | | | | | |
| -456S | 2x12 | LP | | | 15u"/0.38u MIN (NOTE 17) OVER 50u"/1.27u Ni | | | NOTE 18 |
| -457 | 2x12 | NO | | | 30u"/0.76u MIN (NOTE 17) OVER 50u"/1.27u Ni | | | |
| -458 | | STD | | | 30u"/0.76u MIN (NOTE 17) OVER 50u"/1.27u Ni | | | |
| -459 | | LP | | | 30u"/0.76u MIN (NOTE 17) OVER 50u"/1.27u Ni | | | |
| -460 | | NO | | | 30u"/0.76u MIN (NOTE 17) OVER 50u"/1.27u Ni | | | |
| -461 | | STD | | | 30u"/0.76u MIN (NOTE 17) OVER 50u"/1.27u Ni | | | |
| -462 | | LP | | | 30u"/0.76u MIN (NOTE 17) OVER 50u"/1.27u Ni | | | |
| -463 | | NO | | | 120u"-200u"/3.04u-5.08uTIN/LEAD | | | NOTE 16,19 |
| -464 | | STD | | | 120u"-200u"/3.04u-5.08uTIN/LEAD | | | NOTE 16,19 |
| 65863-465 | 2x12 | LP | 1.100/27.940 | .105/ 2,67 | 120u"-200u"/3.04u-5.08uTIN/LEAD | D | NONE | NOTE 16,19 |

FCIconnect.com

Copyright FCI

| | | | | | | | |
|---|---|---|---|---|---|---|---|
| mat'l. code | | | | surface ISO 1302 ✓ | tolerance ISO 406 ISO 1101 | projection | product family QUICKIE |
| ltr | ecn no | dr | date | tolerances unless otherwise specified | | | title |
| BE | | | | angles | linear .XX±.01/.X±0.3 / .XXX±.005/.XX±0.13 / .XXXX±.0020/.XXX±0.051 | INCH/MM | HEADER, QUICKIE SEA-HORSE, VERTICAL |
| | | | | 0°±2° | | scale 1:1 | |
| | | | | dr | M. CORNMAN | 8/21/90 | dwg no 65863 sheet 15 of 23 size A3 |
| | | | | engr | M. SMYK | 8/21/90 | |
| | | | | chr | M. SMYK | 8/21/90 | |
| | | | | appd | M. SMYK | 8/21/90 | type Product Customer Drawing |
| sheet index | revision sheet | | | | | | |

form: A3

| PRODUCT NO NOTE 12,13 | SIZE | LATCH NOTE 8 | DIM B | DIM D | TERMINAL PLATING | STYLE | |
|---|---|---|---|---|---|---|---|
| 65863-466 | 2x12 | NO | 1.100/27.940 | .150/3.81 | 15u"/0.38u MIN (NOTE 17) OVER 50u"/1.27u Ni | D | |
| -467 | | STD | | | 15u"/0.38u MIN (NOTE 17) OVER 50u"/1.27u Ni | | |
| -468 | | LP | | | 15u"/0.38u MIN (NOTE 17) OVER 50u"/1.27u Ni | | |
| -469 | | NO | | | 30u"/0.76u MIN (NOTE 17) OVER 50u"/1.27u Ni | | |
| -470 | | STD | | | 30u"/0.76u MIN (NOTE 17) OVER 50u"/1.27u Ni | | |
| -471 | | LP | | | 30u"/0.76u MIN (NOTE 17) OVER 50u"/1.27u Ni | | |
| -472 | | NO | | | 30u"/0.76u MIN (NOTE 17) OVER 50u"/1.27u Ni | | |
| -473 | | STD | | | 30u"/0.76u MIN (NOTE 17) OVER 50u"/1.27u Ni | | |
| -474 | | LP | | | 30u"/0.76u MIN (NOTE 17) OVER 50u"/1.27u Ni | | |
| -475 | | NO | | | 120u-200u"/3.04u-5.08u TIN/LEAD | | NOTE 16,19 |
| -476 | | STD | | | 120u-200u"/3.04u-5.08u TIN/LEAD | | NOTE 16,19 |
| -477 | | LP | | .150/3.81 | 120u-200u"/3.04u-5.08u TIN/LEAD | | NOTE 16,19 |
| -478 | | NO | | .105/2.67 | 15u"/0.38u MIN (NOTE 17) OVER 50u"/1.27u Ni | | |
| -479 | | STD | | | 15u"/0.38u MIN (NOTE 17) OVER 50u"/1.27u Ni | | |
| -480 | | LP | | | 15u"/0.38u MIN (NOTE 17) OVER 50u"/1.27u Ni | | |
| -481 | | NO | | | 30u"/0.76u MIN (NOTE 17) OVER 50u"/1.27u Ni | | |
| -482 | | STD | | | 30u"/0.76u MIN (NOTE 17) OVER 50u"/1.27u Ni | | |
| -483 | | LP | | .105/2.67 | 30u"/0.76u MIN (NOTE 17) OVER 50u"/1.27u Ni | | |
| -484 | | NO | | .150/3.81 | 15u"/0.38u MIN (NOTE 17) OVER 50u"/1.27u Ni | | |
| -485 | | STD | | .150/3.81 | 15u"/0.38u MIN (NOTE 17) OVER 50u"/1.27u Ni | | |
| -486 | | LP | | .150/3.81 | 15u"/0.38u MIN (NOTE 17) OVER 50u"/1.27u Ni | | |
| -487 | | NO | | .675/17.15 | 15u"/0.38u MIN (NOTE 17) OVER 50u"/1.27u Ni | | |
| -488 | | STD | | | 15u"/0.38u MIN (NOTE 17) OVER 50u"/1.27u Ni | | |
| -489 | | LP | | | 15u"/0.38u MIN (NOTE 17) OVER 50u"/1.27u Ni | | |
| -490 | | NO | | | 30u"/0.76u MIN (NOTE 17) OVER 50u"/1.27u Ni | | |
| -491 | | STD | | | 30u"/0.76u MIN (NOTE 17) OVER 50u"/1.27u Ni | | |
| -492 | | LP | | | 30u"/0.76u MIN (NOTE 17) OVER 50u"/1.27u Ni | | |
| -493 | | NO | | | 30u"/0.76u MIN (NOTE 17) OVER 50u"/1.27u Ni | | |
| -494 | | STD | | | 30u"/0.76u MIN (NOTE 17) OVER 50u"/1.27u Ni | | |
| -495 | | LP | | | 30u"/0.76u MIN (NOTE 17) OVER 50u"/1.27u Ni | | |
| -496 | | NO | | | 120u-200u"/3.04u-5.08u TIN/LEAD | | NOTE 16,19 |
| -497 | | STD | | | 120u-200u"/3.04u-5.08u TIN/LEAD | | NOTE 16,19 |
| -498 | 2x12 | LP | 1.100/27.940 | .675/17.15 | 120u-200u"/3.04u-5.08u TIN/LEAD | | NOTE 16,19 |
| -499 | 2x15 | NO | 1.400/35.560 | .105/2.67 | 15u"/0.38u MIN (NOTE 17) OVER 50u"/1.27u Ni | | |
| 65863-500 | 2x15 | STD | 1.400/35.560 | .105/2.67 | 15u"/0.38u MIN (NOTE 17) OVER 50u"/1.27u Ni | D | |

FCIconnect.com

Copyright FCI

| | | | | | |
|---|---|---|---|---|---|
| mat'l. code | | | | surface ISO 1302 ✓ | tolerance ISO 406 ISO 1101 |
| ltr | ecn no | dr | date | tolerances unless otherwise specified | |
| BE | | | | angles | linear: .XX±.01/.X±0.3; .XXX±.005/.XX±0.13; .XXXX±.0020/.XXX±0.051 |
| | | | | 0°±2° | |
| | | | | dr | M. CORNMAN 8/21/90 |
| | | | | engr | M. SMYK 8/21/90 |
| | | | | chr | M. SMYK 8/21/90 |
| | | | | appd | M. SMYK 8/21/90 |
| sheet index | revision sheet | | | | |

projection: INCH/MM; scale 1:1

product family: QUICKIE

title: HEADER, QUICKIE SEA-HORSE, VERTICAL

dwg no: 65863 sheet 16 of 23 size A3

type: Product Customer Drawing

form: A3

| PRODUCT NO NOTE 12,13 | SIZE | LATCH NOTE 8 | DIM B | DIM D | TERMINAL PLATING | STYLE | |
|---|---|---|---|---|---|---|---|
| 65863-501 | 2x15 | LP | 1.400/35.560 | .105/2.67 | 15u"/0.38u MIN (NOTE 17) OVER 50u"/1.27u Ni | D | |
| -502 | | NO | | | 30u"/0.76u MIN (NOTE 17) OVER 50u"/1.27u Ni | | |
| -503 | | STD | | | 30u"/0.76u MIN (NOTE 17) OVER 50u"/1.27u Ni | | |
| -504 | | LP | | | 30u"/0.76u MIN (NOTE 17) OVER 50u"/1.27u Ni | | |
| -505 | | NO | | | 30u"/0.76u MIN (NOTE 17) OVER 50u"/1.27u Ni | | |
| -506 | | STD | | | 30u"/0.76u MIN (NOTE 17) OVER 50u"/1.27u Ni | | |
| -507 | | LP | | | 30u"/0.76u MIN (NOTE 17) OVER 50u"/1.27u Ni | | |
| -508 | | NO | | | 120u-200u"/3.04u-5.08u TIN/LEAD | | NOTE 16,19 |
| -509 | | STD | | | 120u-200u"/3.04u-5.08u TIN/LEAD | | NOTE 16,19 |
| -510 | | LP | | .105/2.67 | 120u-200u"/3.04u-5.08u TIN/LEAD | | NOTE 16,19 |
| -511 | | NO | | .150/3.81 | 15u"/0.38u MIN (NOTE 17) OVER 50u"/1.27u Ni | | |
| -512 | | STD | | | 15u"/0.38u MIN (NOTE 17) OVER 50u"/1.27u Ni | | |
| -513 | | LP | | | 15u"/0.38u MIN (NOTE 17) OVER 50u"/1.27u Ni | | |
| -514 | | NO | | | 30u"/0.76u MIN (NOTE 17) OVER 50u"/1.27u Ni | | |
| -515 | | STD | | | 30u"/0.76u MIN (NOTE 17) OVER 50u"/1.27u Ni | | |
| -516 | | LP | | | 30u"/0.76u MIN (NOTE 17) OVER 50u"/1.27u Ni | | |
| -517 | | NO | | | 30u"/0.76u MIN (NOTE 17) OVER 50u"/1.27u Ni | | |
| -518 | | STD | | | 30u"/0.76u MIN (NOTE 17) OVER 50u"/1.27u Ni | | |
| -519 | | LP | | | 30u"/0.76u MIN (NOTE 17) OVER 50u"/1.27u Ni | | |
| -520 | | NO | | | 120u-200u"/3.04u-5.08u TIN/LEAD | | NOTE 16,19 |
| -521 | | STD | | | 120u-200u"/3.04u-5.08u TIN/LEAD | | NOTE 16,19 |
| -522 | | LP | | .150/3.81 | 120u-200u"/3.04u-5.08u TIN/LEAD | | NOTE 16,19 |
| -523 | | NO | | .105/2.67 | 15u"/0.38u MIN (NOTE 17) OVER 50u"/1.27u Ni | | |
| -524 | | STD | | | 15u"/0.38u MIN (NOTE 17) OVER 50u"/1.27u Ni | | |
| -525 | | LP | | | 15u"/0.38u MIN (NOTE 17) OVER 50u"/1.27u Ni | | |
| -526 | | NO | | | 30u"/0.76u MIN (NOTE 17) OVER 50u"/1.27u Ni | | |
| -527 | | STD | | | 30u"/0.76u MIN (NOTE 17) OVER 50u"/1.27u Ni | | |
| -528 | | LP | | .105/2.67 | 30u"/0.76u MIN (NOTE 17) OVER 50u"/1.27u Ni | | |
| -529 | | NO | | .150/3.81 | 15u"/0.38u MIN (NOTE 17) OVER 50u"/1.27u Ni | | |
| -530 | | STD | | .150/3.81 | 15u"/0.38u MIN (NOTE 17) OVER 50u"/1.27u Ni | | |
| -531 | | LP | | .150/3.81 | 15u"/0.38u MIN (NOTE 17) OVER 50u"/1.27u Ni | | |
| -532 | | NO | | .675/17.15 | 15u"/0.38u MIN (NOTE 17) OVER 50u"/1.27u Ni | | |
| -533 | | STD | | | 15u"/0.38u MIN (NOTE 17) OVER 50u"/1.27u Ni | | |
| -534 | | LP | | | 15u"/0.38u MIN (NOTE 17) OVER 50u"/1.27u Ni | | |
| 65863-535 | 2x15 | NO | 1.400/35.560 | .675/17.15 | 30u"/0.76u MIN (NOTE 17) OVER 50u"/1.27u Ni | D | |

| | | | | | |
|---|---|---|---|---|---|
| mat'l. code | | surface ISO 1302 | tolerance ISO 406 ISO 1101 | projection | product family QUICKIE |
| ltr ecn no dr date | | tolerances unless otherwise specified | | | title |
| BE | angles | linear | .XX±.01/.X±0.3 | INCH/MM | HEADER, QUICKIE SEA-HORSE, VERTICAL |
| | | | .XXX±.005/.XX±0.13 | | |
| | 0°±2° | | .XXXX±.0020/.XXX±0.051 | scale 1:1 | |
| | dr | M. CORNMAN | 8/21/90 | | dwg no 65863 sheet 17 of 23 size A3 |
| | engr | M. SMYK | 8/21/90 | | |
| | chr | M. SMYK | 8/21/90 | | |
| | appd | M. SMYK | 8/21/90 | | type Product Customer Drawing |
| sheet index revision sheet | | | | | |

FCIconnect.com
Copyright FCI

| PRODUCT NO NOTE 12,13 | SIZE | LATCH NOTE 8 | DIM B | DIM D | TERMINAL PLATING | STYLE | |
|---|---|---|---|---|---|---|---|
| 65863-536 | 2x15 | STD | 1.400/35.560 | .675/17.15 | 30u"/0.76u MIN (NOTE 17) OVER 50u"/1.27u Ni | D | |
| -537 | | LP | | | 30u"/0.76u MIN (NOTE 17) OVER 50u"/1.27u Ni | | |
| -538 | | NO | | | 30u"/0.76u MIN (NOTE 17) OVER 50u"/1.27u Ni | | |
| -539 | | STD | | | 30u"/0.76u MIN (NOTE 17) OVER 50u"/1.27u Ni | | |
| -540 | | LP | | | 30u"/0.76u MIN (NOTE 17) OVER 50u"/1.27u Ni | | |
| -541 | | NO | | | 120u-200u"/3.04u-5.08u TIN/LEAD | | NOTE 16,19 |
| -542 | | STD | | | 120u-200u"/3.04u-5.08u TIN/LEAD | | NOTE 16,19 |
| -543 | 2x15 | LP | 1.400/35.560 | .675/17.15 | 120u-200u"/3.04u-5.08u TIN/LEAD | | NOTE 16,19 |
| -544 | 2x22 | NO | 2.100/53.340 | .105/2.67 | 15u"/0.38u MIN (NOTE 17) OVER 50u"/1.27u Ni | | |
| -545 | | STD | | | 15u"/0.38u MIN (NOTE 17) OVER 50u"/1.27u Ni | | |
| -546 | | LP | | | 15u"/0.38u MIN (NOTE 17) OVER 50u"/1.27u Ni | | |
| -547 | | NO | | | 30u"/0.76u MIN (NOTE 17) OVER 50u"/1.27u Ni | | |
| -548 | | STD | | | 30u"/0.76u MIN (NOTE 17) OVER 50u"/1.27u Ni | | |
| -549 | | LP | | | 30u"/0.76u MIN (NOTE 17) OVER 50u"/1.27u Ni | | |
| -550 | | NO | | | 30u"/0.76u MIN (NOTE 17) OVER 50u"/1.27u Ni | | |
| -551 | | STD | | | 30u"/0.76u MIN (NOTE 17) OVER 50u"/1.27u Ni | | |
| -552 | | LP | | | 30u"/0.76u MIN (NOTE 17) OVER 50u"/1.27u Ni | | |
| -553 | | NO | | | 120u-200u"/3.04u-5.08u TIN/LEAD | | NOTE 16,19 |
| -554 | | STD | | | 120u-200u"/3.04u-5.08u TIN/LEAD | | NOTE 16,19 |
| -555 | | LP | | .105/2.67 | 120u-200u"/3.04u-5.08u TIN/LEAD | | NOTE 16,19 |
| -556 | | NO | | .150/3.81 | 15u"/0.38u MIN (NOTE 17) OVER 50u"/1.27u Ni | | |
| -557 | | STD | | | 15u"/0.38u MIN (NOTE 17) OVER 50u"/1.27u Ni | | |
| -558 | | LP | | | 15u"/0.38u MIN (NOTE 17) OVER 50u"/1.27u Ni | | |
| -559 | | NO | | | 30u"/0.76u MIN (NOTE 17) OVER 50u"/1.27u Ni | | |
| -560 | | STD | | | 30u"/0.76u MIN (NOTE 17) OVER 50u"/1.27u Ni | | |
| -561 | | LP | | | 30u"/0.76u MIN (NOTE 17) OVER 50u"/1.27u Ni | | |
| -562 | | NO | | | 30u"/0.76u MIN (NOTE 17) OVER 50u"/1.27u Ni | | |
| -563 | | STD | | | 30u"/0.76u MIN (NOTE 17) OVER 50u"/1.27u Ni | | |
| -564 | | LP | | | 30u"/0.76u MIN (NOTE 17) OVER 50u"/1.27u Ni | | |
| -565 | | NO | | | 120u-200u"/3.04u-5.08u TIN/LEAD | | NOTE 16,19 |
| -566 | | STD | | | 120u-200u"/3.04u-5.08u TIN/LEAD | | NOTE 16,19 |
| -567 | | LP | | .150/3.81 | 120u-200u"/3.04u-5.08u TIN/LEAD | | NOTE 16,19 |
| -568 | | NO | | .105/2.67 | 15u"/0.38u MIN (NOTE 17) OVER 50u"/1.27u Ni | | |
| -569 | | STD | | .105/2.67 | 15u"/0.38u MIN (NOTE 17) OVER 50u"/1.27u Ni | | |
| 65863-570 | 2x22 | LP | 2.100/53.340 | .105/2.67 | 15u"/0.38u MIN (NOTE 17) OVER 50u"/1.27u Ni | D | |

FCIconnect.com

Copyright FCI

| | | | |
|---|---|---|---|
| mat'l. code | surface ISO 1302 | tolerance ISO 406 ISO 1101 | projection |
| ltr / ecn no / dr / date | tolerances unless otherwise specified | | |
| BE | angles 0°±2° | linear .XX±.01/.X±0.3; .XXX±.005/.XX±0.13; .XXXX±.0020/.XXX±0.051 | INCH/MM |
| | | | scale 1:1 |
| | dr | M. CORNMAN | 8/21/90 |
| | engr | M. SMYK | 8/21/90 |
| | chr | M. SMYK | 8/21/90 |
| | appd | M. SMYK | 8/21/90 |
| sheet index / revision sheet | | | |

product family: QUICKIE

title: HEADER, QUICKIE SEA-HORSE, VERTICAL

dwg no: 65863 sheet 18 of 23 size A3

type: Product Customer Drawing

form: A3

| PRODUCT NO NOTE 12,13 | SIZE | LATCH NOTE 8 | DIM B | DIM D | TERMINAL PLATING | STYLE | |
|---|---|---|---|---|---|---|---|
| 65863-571 | 2x22 | NO | 2.100/53.340 | .105/2.67 | 30u"/0.76u MIN (NOTE 17) OVER 50u"/1.27u Ni | D | |
| -572 | | STD | | .105/2.67 | 30u"/0.76u MIN (NOTE 17) OVER 50u"/1.27u Ni | | |
| -573 | | LP | | .105/2.67 | 30u"/0.76u MIN (NOTE 17) OVER 50u"/1.27u Ni | | |
| -574 | | NO | | .150/3.81 | 15u"/0.38u MIN (NOTE 17) OVER 50u"/1.27u Ni | | |
| -575 | | STD | | .150/3.81 | 15u"/0.38u MIN (NOTE 17) OVER 50u"/1.27u Ni | | |
| -576 | | LP | | .150/3.81 | 15u"/0.38u MIN (NOTE 17) OVER 50u"/1.27u Ni | | |
| -577 | | NO | | .675/17.15 | 15u"/0.38u MIN (NOTE 17) OVER 50u"/1.27u Ni | | |
| -578 | | STD | | | 15u"/0.38u MIN (NOTE 17) OVER 50u"/1.27u Ni | | |
| -579 | | LP | | | 15u"/0.38u MIN (NOTE 17) OVER 50u"/1.27u Ni | | |
| -580 | | NO | | | 30u"/0.76u MIN (NOTE 17) OVER 50u"/1.27u Ni | | |
| -581 | | STD | | | 30u"/0.76u MIN (NOTE 17) OVER 50u"/1.27u Ni | | |
| -582 | | LP | | | 30u"/0.76u MIN (NOTE 17) OVER 50u"/1.27u Ni | | |
| -583 | | NO | | | 30u"/0.76u MIN (NOTE 17) OVER 50u"/1.27u Ni | | |
| -584 | | STD | | | 30u"/0.76u MIN (NOTE 17) OVER 50u"/1.27u Ni | | |
| -585 | | LP | | | 30u"/0.76u MIN (NOTE 17) OVER 50u"/1.27u Ni | | |
| -586 | | NO | | | 120u-200u"/3.04u-5.08u TIN/LEAD | | NOTE 16,19 |
| -587 | | STD | | | 120u-200u"/3.04u-5.08u TIN/LEAD | | NOTE 16,19 |
| -588 | 2x22 | LP | 2.100/53.340 | .675/17.15 | 120u-200u"/3.04u-5.08u TIN/LEAD | | NOTE 16,19 |
| -589 | 2x25 | STD | 2.400/60.960 | .150/3.81 | 30u"/0.76u MIN (NOTE 17) OVER 50u"/1.27u Ni | | |
| -590 | | 66258 | | .105/2.67 | | | |
| -591 | | 66258 | | .150/3.81 | | | |
| -592 | 2x25 | NO | 2.400/60.960 | | 30u"/0.76u MIN (NOTE 17) OVER 50u"/1.27u Ni | | |
| -593 | 2x13 | LP | 1.200/30.480 | | 50u"/1.27u MIN (NOTE 17) OVER 50u"/1.27u Ni | | |
| -594 | 2x13 | NO | 1.200/30.480 | .150/3.81 | | | |
| -595 | 2x10 | NO | .900/22.860 | .150/3.81 | | | |
| -596 | 2x10 | STD | .900/22.860 | .150/3.81 | | D | |
| -597 | 2x5 | LP | .400/10.160 | .150/3.81 | | A | |
| -598 | 2x5 | NO | .400/10.160 | .150/3.81 | | A | |
| -599 | 2x5 | LP | .400/10.160 | .675/17.15 | | A | |
| -600 | 2x5 | NO | .400/10.160 | .675/17.15 | 50u"/1.27u MIN (NOTE 17) OVER 50u"/1.27u Ni | A | |
| -601 | 2X32 | NO | 3.100/78.740 | .105/2.67 | 15u"/0.38u MIN (NOTE 17) OVER 50u"/1.27u Ni | D | |
| -602 | 2X32 | STD | 3.100/78.740 | .105/2.67 | 15u"/0.38u MIN (NOTE 17) OVER 50u"/1.27u Ni | D | |
| -603 | 2X32 | LP | 3.100/78.740 | .105/2.67 | 15u"/0.38u MIN (NOTE 17) OVER 50u"/1.27u Ni | D | |
| 65863-604 | 2X32 | NO | 3.100/78.740 | .105/2.67 | 30u"/0.76u MIN (NOTE 17) OVER 50u"/1.27u Ni | D | |

FCIconnect.com

Copyright FCI

| | | | |
|---|---|---|---|
| mat'l. code | surface ISO 1302 ✓ | tolerance ISO 406 ISO 1101 | projection |
| ltr ecn no dr date | tolerances unless otherwise specified | | |
| BE | angles | linear .XX±.01/.X±0.3 / .XXX±.005/.XX±0.13 / .XXXX±.0020/.XXX±0.051 | INCH/MM |
| | 0°±2° | | scale 1:1 |
| | dr M. CORNMAN 8/21/90 | | |
| | engr M. SMYK 8/21/90 | | |
| | chr M. SMYK 8/21/90 | | |
| | appd M. SMYK 8/21/90 | | |
| sheet index / revision sheet | | | |

product family: QUICKIE

title: HEADER, QUICKIE SEA-HORSE, VERTICAL

dwg no: 65863 sheet 19 of 23 size A3

type: Product Customer Drawing

form: A3

| PRODUCT NO NOTE 12,13 | SIZE | LATCH NOTE 8 | DIM B | DIM D | TERMINAL PLATING | STYLE | |
|---|---|---|---|---|---|---|---|
| 65863-605 | 2X32 | STD | 3.100/78.740 | .105/2.67 | 30u"/0.76u MIN (NOTE 17) OVER 50u"/1.27u Ni | D | |
| -606 | | LP | | | 30u"/0.76u MIN (NOTE 17) OVER 50u"/1.27u Ni | | |
| -607 | | NO | | | 30u"/0.76u MIN (NOTE 17) OVER 50u"/1.27u Ni | | |
| -608 | | STD | | | 30u"/0.76u MIN (NOTE 17) OVER 50u"/1.27u Ni | | |
| -609 | | LP | | | 30u"/0.76u MIN (NOTE 17) OVER 50u"/1.27u Ni | | |
| -610 | | NO | | | 120u-200u"/3.04u-5.08u TIN/LEAD | | NOTE 16,19 |
| -611 | | STD | | | 120u-200u"/3.04u-5.08u TIN/LEAD | | NOTE 16,19 |
| -612 | 2X32 | LP | 3.100/78.740 | .105/2.67 | 120u-200u"/3.04u-5.08u TIN/LEAD | | NOTE 16,19 |
| -613 | 2x20 | NO | 1.900/48.260 | .105/ 2,67 | 30u"/0.76u MIN (NOTE 17) OVER 50u"/1.27u Ni | | |
| -614 | 2x20 | STD | 1.900/48.260 | .105/ 2,67 | 30u"/0.76u MIN (NOTE 17) OVER 50u"/1.27u Ni | | |
| -615 | 2x20 | LP | 1.900/48.260 | .105/ 2,67 | 30u"/0.76u MIN (NOTE 17) OVER 50u"/1.27u Ni | | |
| -616 | 2x25 | NO | 2.400/60.960 | .450/ 11,43 | 30u"/0.76u MIN (NOTE 17) OVER 50u"/1.27u Ni | | |
| -617 | 2x17 | NO | 1.600/40.640 | .150/ 3,81 | 50u"/1.27u MIN (NOTE 17) OVER 50u"/1.27u Ni | | |
| -618 | 2x17 | STD | 1.600/40.640 | .150/ 3,81 | 50u"/1.27u MIN (NOTE 17) OVER 50u"/1.27u Ni | | |
| -619 | 2x17 | LP | 1.600/40.640 | .150/ 3,81 | 50u"/1.27u MIN (NOTE 17) OVER 50u"/1.27u Ni | | |
| -620 | 2X32 | STD | 3.100/78.740 | .105/2.67 | 30u"/0.76u MIN (NOTE 17) OVER 50u"/1.27u Ni | | |
| -621 | 2X32 | NO | 3.100/78.740 | | | | |
| -622 | 2x15 | STD | 1.400/35.560 | | | | |
| -623 | 2x15 | NO | 1.400/35.560 | | | | |
| -624 | 2x22 | STD | 2.100/53.340 | | | | |
| -625 | 2x22 | NO | 2.100/53.340 | .105/2.67 | 30u"/0.76u MIN (NOTE 17) OVER 50u"/1.27u Ni | | |
| -626 | 2x25 | NO | 2.400/60.960 | .150/ 3,81 | 50u"/1.27u MIN (NOTE 17) OVER 50u"/1.27u Ni | | |
| -627 | 2x25 | STD | 2.400/60.960 | | | | |
| -628 | 2x25 | LP | 2.400/60.960 | | | | |
| -629 | 2x20 | NO | 1.900/48.260 | | | | |
| -630 | 2x20 | STD | 1.900/48.260 | | | | |
| -631 | 2x20 | LP | 1.900/48.260 | .150/ 3,81 | 50u"/1.27u MIN (NOTE 17) OVER 50u"/1.27u Ni | | |
| -632 | 2x20 | STD | 1.900/48.260 | .105/2.67 | 30u"/0.76u MIN (NOTE 17) OVER 50u"/1.27u Ni | | |
| -633 | 2x8 | STD | .700/17.78 | .150/ 3,81 | 50u"/1.27u MIN (NOTE 17) OVER 50u"/1.27u Ni | D | |
| -634 | 2x7 | NO | .600/15.24 | .236/ 5.99 | 30u"/0.76u MIN (NOTE 17) OVER 50u"/1.27u Ni | C | |
| -635 | 2x5 | STD | .400/10.16 | .520/13.21 | 30u"/0.76u MIN (NOTE 17) OVER 50u"/1.27u Ni | A | |
| -636 | 2x8 | NO | .700/17.78 | .150/ 3,81 | 30u"/0.76u MIN (NOTE 17) OVER 50u"/1.27u Ni | D | |
| -637 | 2x8 | STD | .700/17.78 | .150/ 3,81 | 30u"/0.76u MIN (NOTE 17) OVER 50u"/1.27u Ni | D | |
| -638 | 2x10 | NO | .800/20.32 | .150/ 3,81 | 30u"/0.76u MIN (NOTE 17) OVER 50u"/1.27u Ni | D | |
| 65863-639 | 2x10 | STD | .800/20.32 | .150/ 3,81 | 30u"/0.76u MIN (NOTE 17) OVER 50u"/1.27u Ni | D | CUSTOMER SPECIAL |

| ltr | ecn no | dr | date |
|---|---|---|---|
| BE | | | |

mat'l. code

surface ISO 1302 √

tolerance ISO 406 ISO 1101

tolerances unless otherwise specified

angles 0°±2°

linear .XX±.01/.X±0.3; .XXX±.005/.XX±0.13; .XXXX±.0020/.XXX±0.051

projection

INCH/MM

scale 1:1

| | | |
|---|---|---|
| dr | M. CORNMAN | 8/21/90 |
| engr | M. SMYK | 8/21/90 |
| chr | M. SMYK | 8/21/90 |
| appd | M. SMYK | 8/21/90 |

product family: QUICKIE

title: HEADER, QUICKIE SEA-HORSE, VERTICAL

dwg no: 65863 sheet 20 of 23 size A3

type: Product Customer Drawing

sheet index | revision sheet

form: A3



FCIconnect.com
Copyright FCI

| PRODUCT NO NOTE 12,13 | SIZE | LATCH NOTE 8 | DIM B | DIM D | TERMINAL PLATING | STYLE | PIN MISSING | |
|---|---|---|---|---|---|---|---|---|
| 65863–640 | 2x12 | NO | 1.100/ 27.94 | .150/3,81 | 30u"/0.76u MIN (NOTE 17) OVER 50u"/1.27u Ni | D | NONE | |
| –641 | 2x12 | STD | 1.100/ 27.94 | | | | | |
| –642 | 2x15 | NO | 1.400/ 35.56 | | | | | |
| –643 | 2x15 | STD | 1.400/ 35.56 | | | | | |
| –644 | 2x30 | NO | 2.900/ 73.66 | | | | | |
| –645 | 2x30 | STD | 2.900/ 73.66 | | | | | |
| –646 | 2x25 | STD | 2.400/ 60.96 | | | D | | |
| –647 | 2x5 | STD | .400/ 10.16 | | | A | | |
| –648 | 2x7 | STD | .600/ 15.24 | | | C | | |
| –649 | 2x13 | STD | 1.120/ 30.48 | | | D | | |
| –650 | 2x17 | STD | 1.600/ 40.64 | | | D | | |
| –651 | 2x5 | NO | .400/ 10.16 | | | A | | |
| –652 | 2x7 | NO | .600/ 15.24 | | | C | | |
| –653 | 2x13 | NO | 1.120/ 30.48 | | | D | | |
| –654 | 2x17 | NO | 1.600/ 40.64 | .150/3,81 | | D | | |
| –655 | 2x5 | STD | .400/ 10.16 | .175/4.45 | | A | | |
| –656 | 2x7 | | .600/ 15.24 | | | C | | |
| –657 | 2x13 | | 1.120/ 30.48 | | | D | | |
| –658 | 2x17 | STD | 1.600/ 40.64 | .175/4.45 | | D | | |
| –659 | 2x5 | NO | .400/ 10.16 | .250/6.35 | | A | | |
| –660 | 2x7 | LP | .600/ 15.24 | .236/5.99 | 30u"/0.76u MIN (NOTE 17) OVER 50u"/1.27u Ni | C | NONE | |
| –715 | 2x8 | LP | .700/ 17.78 | .150/3.81 | 30u"/0.76u MIN (NOTE 17) OVER 50u"/1.27u Ni | D | 3 | |
| –716 | 2x8 | LP | .700/ 17.78 | .150/3.81 | 30u"/0.76u MIN (NOTE 17) OVER 50u"/1.27u Ni | D | 14 | |
| –717 | 2X20 | LP | 1.900/48.26 | .150/3.81 | 30u"/0.76u MIN (NOTE 17) OVER 50u"/1.27u Ni | D | 20 | |
| –717S | 2X20 | LP | 1.900/48.26 | .150/3.81 | 30u"/0.76u MIN (NOTE 17) OVER 50u"/1.27u Ni | D | 20 | NOTE 18 |
| –733 | 2x17 | LP | 1.600/ 40.14 | .105/2.67 | 50u"/1.27u MIN (NOTE 17) OVER 50u"/1.27u Ni | D | 5 | |
| –734 | 2x17 | STD | 1.600/ 40.64 | .105/2.67 | 50u"/1.27u MIN (NOTE 17) OVER 50u"/1.27u Ni | D | 5 | |
| –735 | 2x10 | LP | .900/ 22.86 | .150/3.81 | 30u"/0.76u MIN (NOTE 17) OVER 50u"/1.27u Ni | D | 16 | |
| –736 | 2x10 | LP | .900/ 22.86 | | 30u"/0.76u MIN (NOTE 17) OVER 50u"/1.27u Ni | D | 19 | |
| –737 | 2x5 | LP | .400/ 10.16 | | 30u"/0.76u MIN (NOTE 17) OVER 50u"/1.27u Ni | A | 10 | |
| –738 | 2X20 | LP | 1.900/48.26 | | 30u"/0.76u MIN (NOTE 17) OVER 50u"/1.27u Ni | D | 8 | |
| –739 | 2X25 | LP | 2.400/60.96 | | | D | 25 | |
| –740 | 2X12 | LP | 1.100/ 27.94 | | | D | 20 | |
| –741 | 2X17 | LP | 1.600/ 40.64 | | | D | 5 | |
| –741S | 2X17 | LP | 1.600/ 40.64 | | | D | 5 | NOTE 18 |
| –742 | 2X5 | LP | .400/ 10.16 | | | A | 2 | |
| 65863–743 | 2X17 | LP | 1.600/ 40.64 | .150/3.81 | 30u"/0.76u MIN (NOTE 17) OVER 50u"/1.27u Ni | D | 3 | |

| | | | | | |
|---|---|---|---|---|---|
| mat'l. code | | surface ISO 1302 | tolerance ISO 406 ISO 1101 | projection | product family QUICKIE |
| ltr / ecn no / dr / date | | tolerances unless otherwise specified | | | title |
| BE | | angles | linear | .XX±.01/.X±0.3 | INCH/MM | HEADER, QUICKIE SEA–HORSE, VERTICAL |
| | | | | .XXX±.005/.XX±0.13 | |
| | | 0°±2° | | .XXXX±.0020/.XXX±0.051 | scale 1:1 |
| | | dr | M. CORNMAN | 8/21/90 | dwg no 65863 sheet21 of23 size A3 |
| | | engr | M. SMYK | 8/21/90 | |
| | | chr | M. SMYK | 8/21/90 | |
| | | appd | M. SMYK | 8/21/90 | type Product Customer Drawing |
| sheet index | revision sheet | | | | |

FCIconnect.com
Copyright FCI

| PRODUCT NO NOTE 12,13 | SIZE | LATCH NOTE 8 | DIM B | DIM D | TERMINAL PLATING | STYLE | MISSING PIN | |
|---|---|---|---|---|---|---|---|---|
| 65863–744 | 2x17 | LP | 1.600/ 40.64 | .150/3.81 | 30u"/0.76u MIN (NOTE 17) OVER 50u"/1.27u Ni | D | 3, 5 | |
| 65863–744S | 2x17 | LP | 1.600/ 40.64 | .150/3.81 | 30u"/0.76u MIN (NOTE 17) OVER 50u"/1.27u Ni | D | 3, 5 | NOTE 18 |
| | | | | | | | | |
| 65863–843 | 2x5 | N/A | .400/ 10.16 | .120/3.05 | 15u"/0.38u MIN (NOTE 17) OVER 50u"/1.27u Ni | A | | |
| –844 | 2x7 | | .600/ 15.24 | | | C | | |
| –845 | 2x10 | | .900/ 22.86 | | | D | | |
| –846 | 2x15 | | 1.400/ 35.56 | | | | | |
| –847 | 2x17 | | 1.600/ 40.64 | | | | | |
| –848 | 2X20 | | 1.900/ 48.26 | | | | | |
| –849 | 2X25 | | 2.400/ 60.96 | | | | | |
| –850 | 2x30 | N/A | 2.900/ 73.66 | | | D | | |
| –851 | 2x5 | STD | .400/ 10.16 | | | A | | |
| –852 | 2x7 | | .600/ 15.24 | | | C | N/A | |
| –853 | 2x10 | | .900/ 22.86 | | | D | | |
| –854 | 2x15 | | 1.400/ 35.56 | | | | | |
| –855 | 2x17 | | 1.600/ 40.64 | | | | | |
| –856 | 2X20 | | 1.900/ 48.26 | | | | | |
| –857 | 2X25 | | 2.400/ 60.96 | | | | | |
| –858 | 2x30 | STD | 2.900/ 73.66 | | | D | | |
| –859 | 2x5 | L/P | .400/ 10.16 | | | A | | |
| –860 | 2x7 | | .600/ 15.24 | | | C | | |
| –861 | 2x10 | | .900/ 22.86 | | | D | | |
| –861S | 2x10 | | .900/ 22.86 | | | D | | NOTE 18 |
| –862 | 2x15 | | 1.400/ 35.56 | | | | | |
| –863 | 2x17 | | 1.600/ 40.64 | | | | | |
| –864 | 2X20 | | 1.900/ 48.26 | | | | | |
| –865 | 2X25 | | 2.400/ 60.96 | | | | | |
| 65863–866 | 2x30 | L/P | 2.900/ 73.66 | .120/3.05 | | D | | |
| 65863–867S | 2x12 | L/P | 1.100/ 27.94 | .105/2.67 | 15u"/0.38u MIN (NOTE 17) OVER 50u"/1.27u Ni | D | 24 | NOTE 18 |
| 65863–868S | 2x12 | L/P | 1.100/ 27.94 | .105/2.67 | 30u"/0.76u MIN (NOTE 17) OVER 50u"/1.27u Ni | D | 24 | NOTE 18 |

FCIconnect.com

Copyright FCI

| | | | | | | | |
|---|---|---|---|---|---|---|---|
| mat'l. code | | | | surface ISO 1302 √ | tolerance ISO 406 ISO 1101 | projection | product family QUICKIE |
| ltr | ecn no | dr | date | tolerances unless otherwise specified | | | title |
| BE | | | | angles | linear | INCH/MM | HEADER, QUICKIE SEA–HORSE, VERTICAL |
| | | | | 0°±2° | .XX±.01/.X±0.3 .XXX±.005/.XX±0.13 .XXXX±.0020/.XXX±0.051 | scale 1:1 | |
| | | | | dr | M. CORNMAN | 8/21/90 | dwg no 65863 sheet 22 of 23 size A3 |
| | | | | engr | M. SMYK | 8/21/90 | |
| | | | | chr | M. SMYK | 8/21/90 | |
| | | | | appd | M. SMYK | 8/21/90 | type Product Customer Drawing |
| sheet index | revision sheet | | | | | | |

form: A3

| PRODUCT NO NOTE 12,13 | SIZE | LATCH NOTE 8 | DIM B | DIM D | TERMINAL PLATING | STYLE |
|---|---|---|---|---|---|---|
| 65863-049P | 2x5 | STD | .400/10,160 | .105/ 2,67 | 30u"/0.76u MIN (NOTE 17) OVER 50u"/1.27u Ni | A |
| 65863-055P | 2x7 | STD | .600/15,240 | .105/ 2,67 | 30u"/0.76u MIN (NOTE 17) OVER 50u"/1.27u Ni | C |
| 65863-061P | 2x8 | STD | .700/17,780 | .105/ 2,67 | 30u"/0.76u MIN (NOTE 17) OVER 50u"/1.27u Ni | D |
| 65863-067P | 2x10 | STD | .900/22,860 | .105/ 2,67 | 30u"/0.76u MIN (NOTE 17) OVER 50u"/1.27u Ni | D |
| 65863-073P | 2x13 | STD | 1.200/30,480 | .105/ 2,67 | 30u"/0.76u MIN (NOTE 17) OVER 50u"/1.27u Ni | D |
| 65863-079P | 2x17 | STD | 1.600/40,640 | .105/ 2,67 | 30u"/0.76u MIN (NOTE 17) OVER 50u"/1.27u Ni | D |
| 65863-085P | 2x20 | STD | 1.900/48,260 | .105/ 2,67 | 30u"/0.76u MIN (NOTE 17) OVER 50u"/1.27u Ni | D |
| 65863-091P | 2x25 | STD | 2.400/60,960 | .105/ 2,67 | 30u"/0.76u MIN (NOTE 17) OVER 50u"/1.27u Ni | D |
| 65863-203P | 2x20 | LP | 1.900/48,260 | .105/ 2,67 | 30u"/0.76u MIN (NOTE 17) OVER 50u"/1.27u Ni | D |
| 65863-079F | 2x17 | STD | 1.600/40,640 | .105/ 2,67 | 30u"/0.76u MIN (NOTE 17) OVER 50u"/1.27u Ni | D |
| 65863-081F | 2x17 | STD | 1.600/40,640 | .150/ 3.81 | 30u"/0.76u MIN (NOTE 17) OVER 50u"/1.27u Ni | D |

FCIconnect.com
Copyright FCI

| | | | | | | | |
|---|---|---|---|---|---|---|---|
| mat'l. code | | | | surface ISO 1302 ✓ | tolerance ISO 406 ISO 1101 | projection | product family QUICKIE |
| ltr | ecn no | dr | date | tolerances unless otherwise specified | | | title |
| BE | | | | angles | linear .XX±.01/.X±0.3 | INCH/MM | HEADER, QUICKIE SEA-HORSE, VERTICAL |
| | | | | | .XXX±.005/.XX±0.13 | | |
| | | | | 0°±2° | .XXXX±.0020/.XXX±0.051 | scale 1:1 | |
| | | | | dr | M. CORNMAN 8/21/90 | FCI | dwg no 65863 sheet 23 of 23 size A3 |
| | | | | engr | M. SMYK 8/21/90 | | |
| | | | | chr | M. SMYK 8/21/90 | | |
| | | | | appd | M. SMYK 8/21/90 | | type Product Customer Drawing |
| sheet index | revision sheet | | | | | | |

form: A3

# Mouser Electronics

Authorized Distributor

Click to View Pricing, Inventory, Delivery & Lifecycle Information:

FCI:
65863-504LF