THIS DRAWING IS UNPUBLISHED. RELEASED FOR PUBLICATION -,- .
© COPYRIGHT - BY TYCO ELECTRONICS CORPORATION. ALL RIGHTS RESERVED.

LOC	DIST
CM	0

REVISIONS

P	LTR	DESCRIPTION	DATE	DWN	APVD
	D	EC 0G3B 1113 04	29DEC05	BSV	DB
	D1	REVISED PER ECO-09-021510	14SEP09	KK	AEG

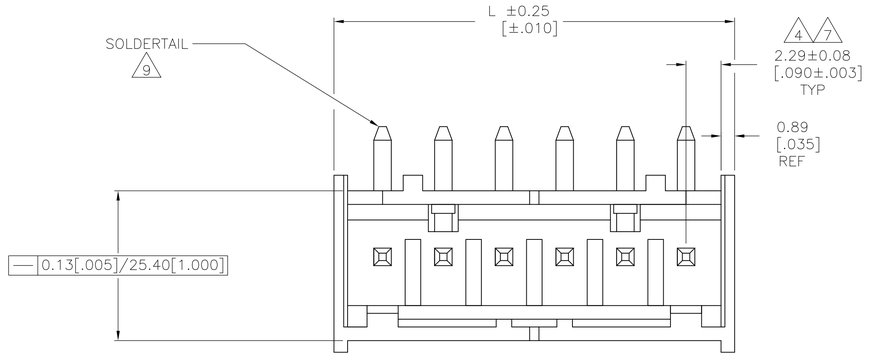

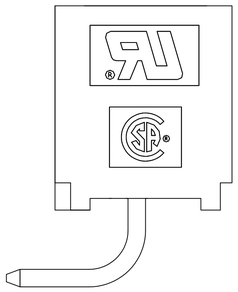

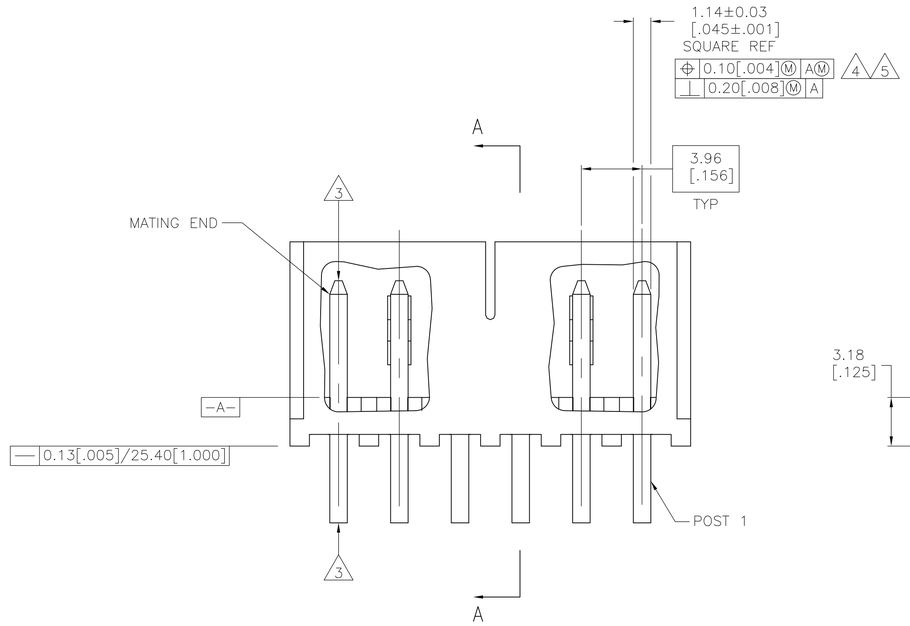

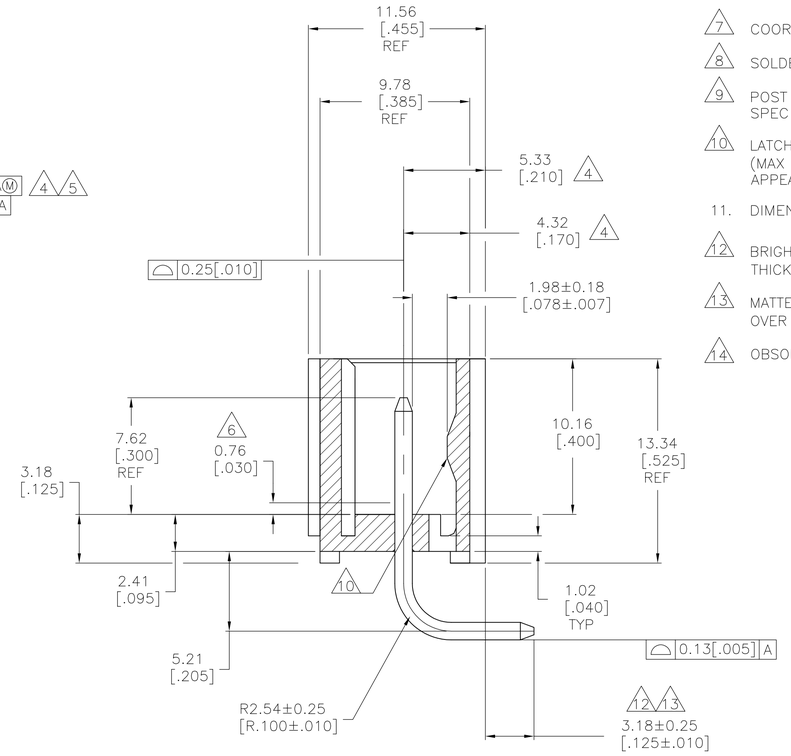

SECTION A–A

1. MATERIAL:
HOUSING – THERMOPLASTIC POLYESTER,GLASS FILLED,UL94–0.
POST – COPPER ALLOY

2. FINISH:
HOUSING – BLACK
POST – SEE NOTES 12 AND 13.

3. POST TO WITHSTAND 3LBS (16N) MIN AXIAL FORCE IN THIS DIRECTION WITHOUT DISLODGING.

4. APPLIES AT -A- .

5. APPLIES WHEN HEADER IS STRAIGHT .

6. PLASTIC PROJECTIONS PERMITTED IN THIS ZONE.

7. COORDINATE DIMENSIONS APPLIES FROM CENTER OF ACTUAL FEATURE.

8. SOLDER SIDE OF BOARD IS SHOWN.

9. POST SOLDERTAIL MUST COMPLY WITH AMP SOLDERABILITY SPEC 109–11–2.

10. LATCH DETENT FEATURE APPEARS 1 PLACE ON EACH END OF PART (MAX OF 2 PER PART) ON ALL POSITIONS 4 THRU 12. THE LATCH APPEARS ONLY ONE PLACE ON 2 & 3 POSITION PARTS.

11. DIMENSIONS IN BRACKETS ARE IN INCHES.

12. BRIGHT TIN LEAD (93/7) PLATE 0.00381 – 0.00889 [.000150 – .000350] THICK, OVER NICKEL UNDERPLATE 0.00127 [.000050] MIN THICK.

13. MATTE TIN PLATE 0.00381 – 0.00889 [.000150 – .000350] THICK, OVER NICKEL UNDERPLATE 0.00127 [.000050] MIN THICK.

14. OBSOLETE PARTS: OBSOLETE CIS STREAMLINING PER D.RENAUD/D.SINISI

PLATING	L DIM MM	L DIM IN	NO. OF POSN	PART NUMBER
13	49.94	1.966	12	3–647126–2
	45.97	1.810	11	3–647126–1
	42.01	1.654	10	3–647126–0
	38.05	1.498	9	2–647126–9
	34.09	1.342	8	2–647126–8
	30.12	1.186	7	2–647126–7
	26.16	1.030	6	2–647126–6
	22.20	.874	5	2–647126–5
	18.24	.718	4	2–647126–4
	14.27	.562	3	2–647126–3
	10.31	.406	2	2–647126–2
12	49.94	1.966	12	1–647126–2
	45.97	1.810	11	1–647126–1
	42.01	1.654	10	1–647126–0
	38.05	1.498	9	647126–9
	34.09	1.342	8	647126–8
	30.12	1.186	7	647126–7
	26.16	1.030	6	647126–6
	22.20	.874	5	647126–5
	18.24	.718	4	647126–4
	14.27	.562	3	647126–3
	10.31	.406	2	647126–2

14 SUPERSEDED

14 SUPERSEDED

647126–6 SHOWN

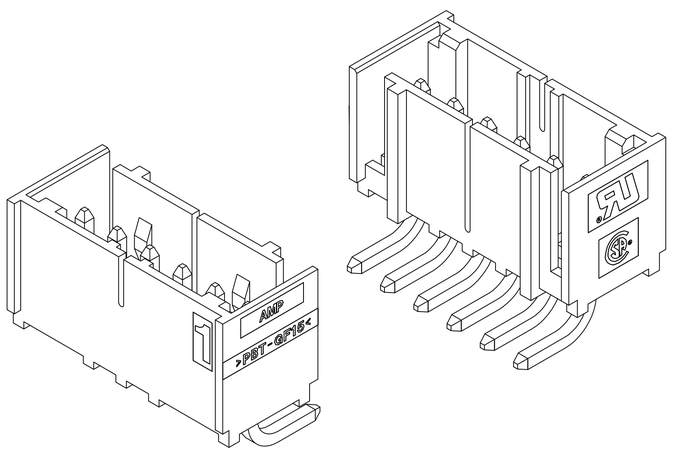

3–DIMENSIONAL MODEL
NTS

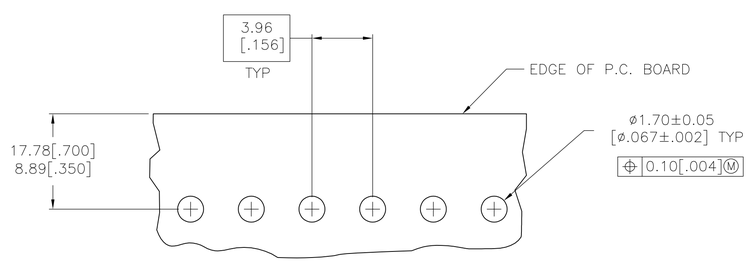

RECOMMENDED MOUNTING HOLE PATTERN
FOR 1.57[.062] THICK P.C. BOARD 8

METRIC

THIS DRAWING IS A CONTROLLED DOCUMENT.

DIMENSIONS: mm [INCHES]

TOLERANCES UNLESS OTHERWISE SPECIFIED:
0 PLC ± –
1 PLC ± –
2 PLC ± –
3 PLC ± .005
4 PLC ± –
ANGLES ± –

MATERIAL –
FINISH –

DWN B. LEWIS 17JUN98
CHK R. SWING 17JUN98
APVD D. CLARK 17JUN98
PRODUCT SPEC –
APPLICATION SPEC –
WEIGHT –

Tyco Electronics
Tyco Electronics Corporation
Harrisburg, PA 17105–3608

NAME
MTA–156 SHROUDED HEADER
ASSEMBLY,RIGHT ANGLE REAR BEND
.045 SQUARE POST,TIN,W/O RETENTION PEG

SIZE	CAGE CODE	DRAWING NO	RESTRICTED TO
A1	00779	C–647126	–

CUSTOMER DRAWING

SCALE	SHEET	REV
5:1	1 OF 1	D1