TERMINALS

12-703-X-01

MATERIAL: BRASS
FINISH: SILVER

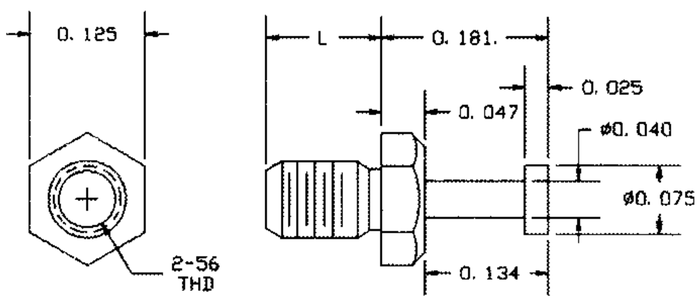

PART NO.	L
12-703-2	1/16
12-703-4	1/8
12-703-6	3/16
12-703-8	1/4
12-703-10	5/16

10-710-X-044

MATERIAL: BRASS
FINISH: BRIGHT ELECTRO-TIN

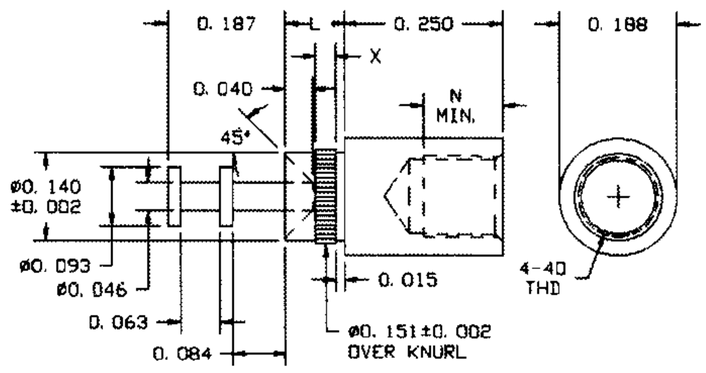

RECOMMENDED MOUNTING HOLE .144 DIA.(#27 DRILL)

PART NO.	L	N	X	T
10-710-2	.094	.125	.031	1/16
10-710-3	.125	.156	.062	3/32
10-710-4	.156	.156	.094	1/8
10-710-6	.222	.156	.094	3/16
10-710-8	.285	.156	.094	1/4

MOUNTING: HARDWARE (UNASSEMBLED)
SCREW: BLINDING HEAD (NICKEL PLATED)
WASHER: INTERNAL TOOTH (NICKEL PLATED)

TOOLS

ANVIL	PUNCH
TA188-250	TP140-T93

13-714-X-01

MATERIAL: BRASS
FINISH: SILVER

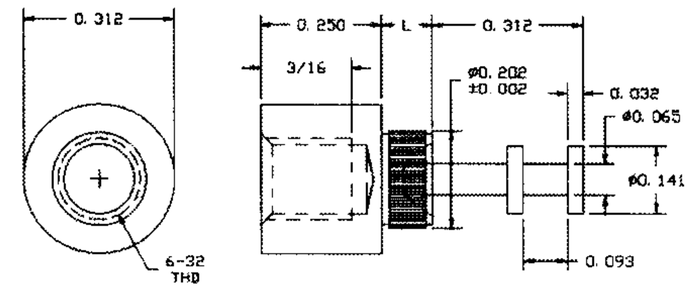

PART NO.	L	T
13-714-1	.075	1/32
13-714-2	.105	1/16
13-714-3	.135	3/32
13-714-4	.165	1/8
13-714-5	.195	5/32
13-714-6	.230	3/16

TOOLS

ANVIL	PUNCH
TA312-250	TP202-T141

12-704-X-01

MATERIAL: BRASS
FINISH: SILVER

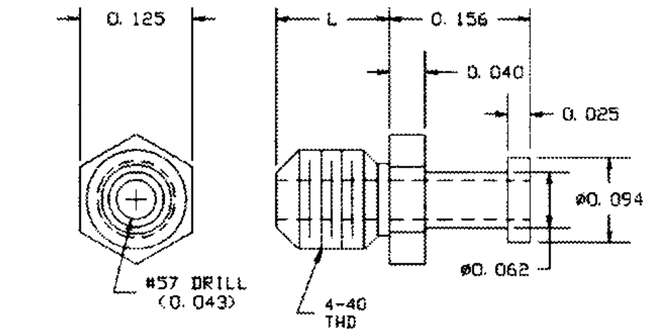

PART NO.	L
12-704-3	3/32
12-704-4	1/8
12-704-6	3/16
12-704-8	1/4
12-704-10	5/16

10-712-1-05

MATERIAL: BRASS
FINISH: ELECTRO-SOLDER

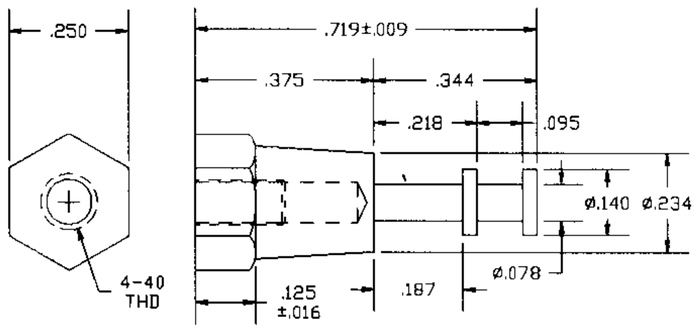

10-706-X-XX

MATERIAL: BRASS
FINISH: SILVER (01)
ELECTRO-SOLDER (05)

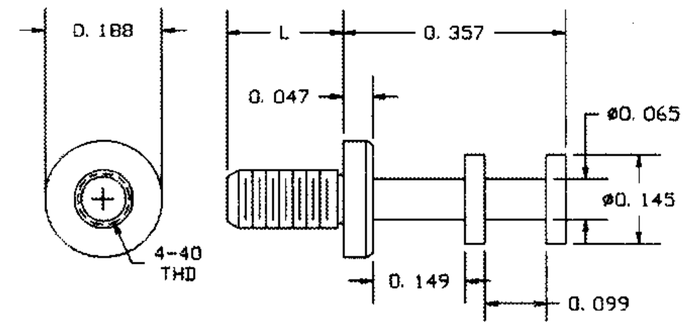

PART NO.	L
10-706-4	.125
10-706-6	.188

10-753-754-756-X-044

MATERIAL: BRASS
FINISH: BRIGHT ELECTRO-TIN

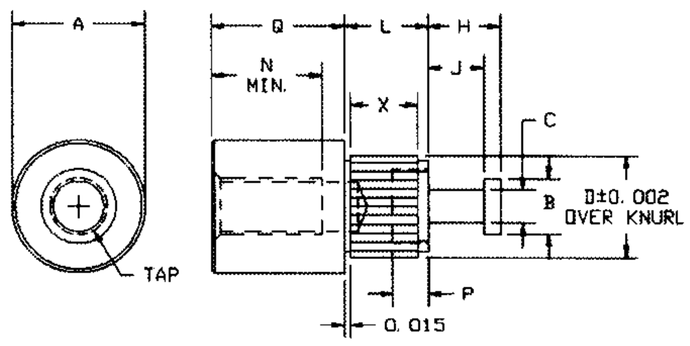

PART NO.	A	B	C	D	H	J	L	N	P	Q	X	TAP	T
10-753-3	.312	.125	.068	.220	.172	.125	.141	.218	.062	.250	.117	6-32	3/32
10-754-4	.344	.141	.078	.250	.203	.156	.172	.250	.078	.312	.148	8-32	1/8
10-756-6	.375	.156	.094	.257	.203	.156	.234	.312	.093	.375	.190	10-32	3/16

RECOMMENDED MOUNTING HOLE:
10-753-3 .213 DIA.(#3 DRILL)
10-754-4 .242 DIA.(C DRILL)
10-756-6 .250 DIA.(1/4 DRILL)

MOUNTING HARDWARE (UNASSEMBLED)
SCREW; BINDING HEAD (NICKEL PLATED)
WASHER; INTERNAL TOOTH (NICKEL PLATED)

PART NUMBER	ANVIL	PUNCH
10-753-3	TA312-250	TP220-T125
10-754-4	TA344-312	TP250-T141
10-756-6	TA375-250	TP257-T156

10-709-3-01

MATERIAL: BRASS
FINISH: SILVER

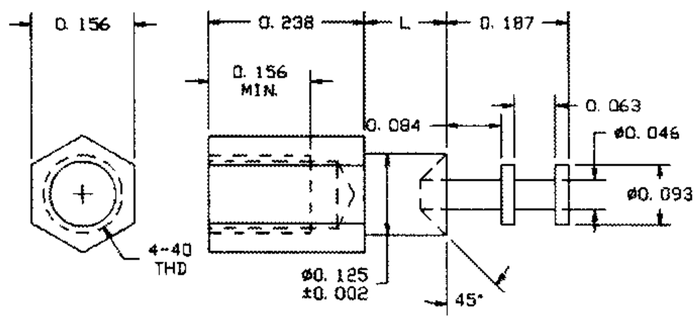

RECOMMENDED MOUNTING HOLE .129 DIA.(#30 DRILL)

PART NO.	L	T
10-709-3	.125	3/32

TOOLS

ANVIL	PUNCH
TA180-238	TP125-T93

10-702-X-XX

MATERIAL: BRASS
FINISH: SILVER (01)
ELECTRO-SOLDER (05)

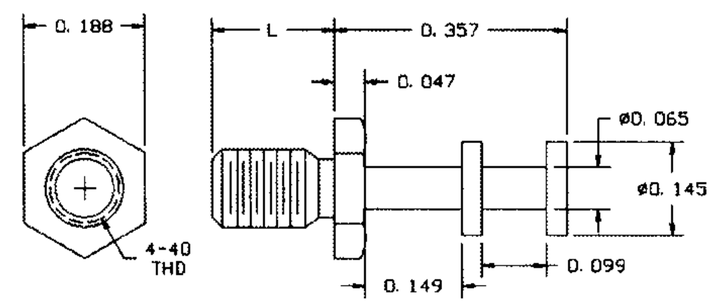

PART NO.	L
10-702-4	.125
10-702-6	.188

10-805-X-01

MATERIAL: BRASS
FINISH: SILVER

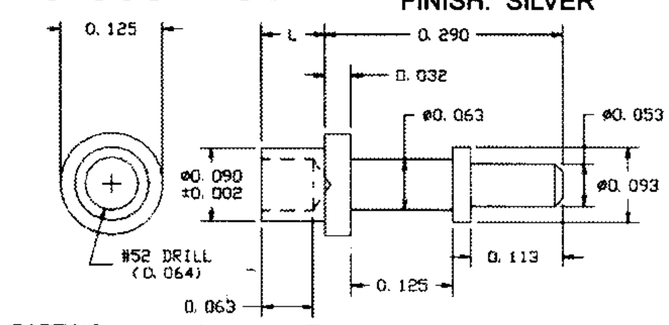

PART NO.	L	T
10-805-1	.078	1/32
10-805-2	.109	1/16
10-805-3	.141	3/32
10-805-4	.172	1/8
10-805-6	.234	3/16
10-805-8	.297	1/4

RECOMMENDED MOUNTING HOLE .094 DIA.(#42 DRILL)

TOOLS

ANVIL	PUNCH
TA125-94-23	TP90-64

10-707-1-01

MATERIAL: BRASS
FINISH: SILVER

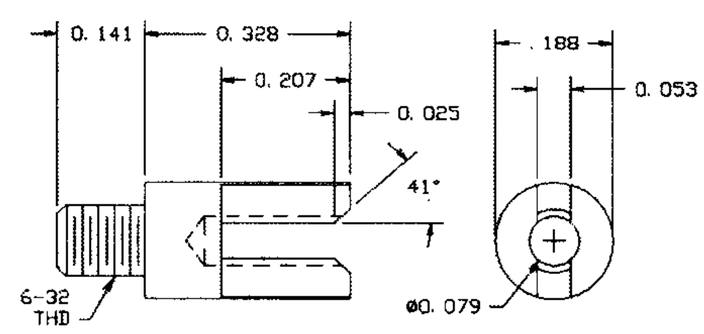

10-711-1-05

MATERIAL: BRASS
FINISH: ELECTRO-SOLDER

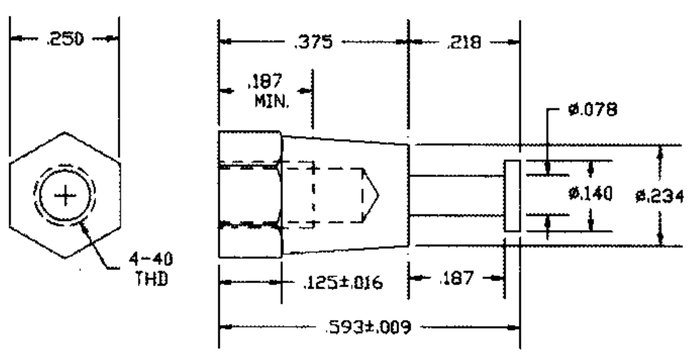

10-807-X-01

MATERIAL: BRASS
FINISH: SILVER

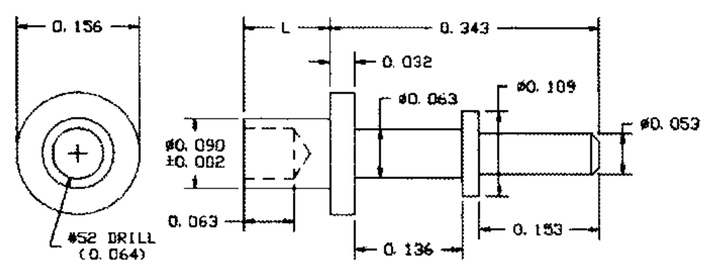

PART NO.	L	T
10-807-1	.078	1/32
10-807-2	.109	1/16
10-807-3	.141	3/32
10-807-4	.172	1/8
10-807-6	.234	3/16
10-807-8	.297	1/4

RECOMMENDED MOUNTING HOLE .094 DIA.(#42 DRILL)

TOOLS

ANVIL	PUNCH
TA156-109-32	TP90-64

FOR ADDITIONAL SIZES AND MATERIALS, CONTACT FACTORY

CONCORD®