THIS DRAWING IS UNPUBLISHED. RELEASED FOR PUBLICATION - ; - .
© COPYRIGHT - BY TYCO ELECTRONICS CORPORATION. ALL RIGHTS RESERVED.

LOC	DIST
—	—

REVISIONS

P	LTR	DESCRIPTION	DATE	DWN	APVD
	A	RELEASED ECR-09-010116	08MAY09	AZ	SY
	A1	REVISED PER ECO-09-024927	08JAN10	KK	AEG

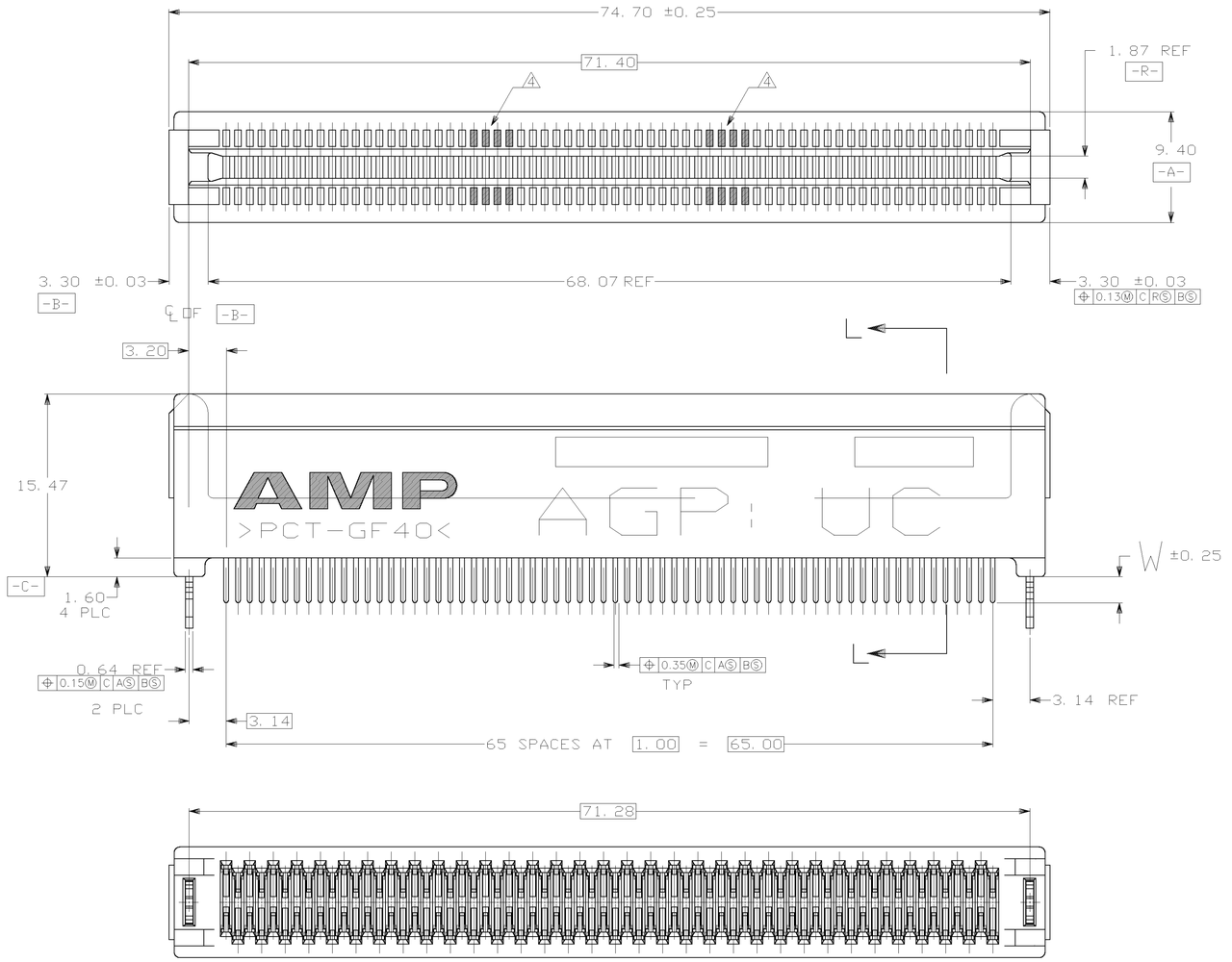

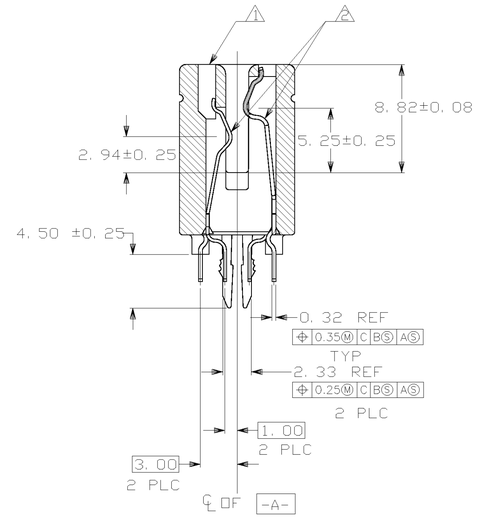

SECTION L-L

1. MATERIAL: HOUSING, THERMOPLASTIC, COLOR: BROWN.
   CONTACTS, PHOSPHOR BRONZE.
   HOLD-DOWNS, BRASS.
2. FINISH: CONTACTS, 1.27 MIN. MICROMETERS NICKEL ALL OVER,
   0.38 MIN. MICROMETERS GOLD OVER NICKEL IN CONTACT AREA,
   2.54 MIN MICROMETERS TIN OVER NICKEL ON SOLDER TAILS.
3. REFER TO INTEL ACCELERATED GRAPHICS PORT INTERFACE SPECIFICATION FOR RECOMMENDED MATING PAD PATTERNS FOR AGP 1X, 2X AND 4X BOARDS.
4. SHADED CONTACT LOCATIONS ARE AT RISK OF DAMAGE DURING MATING AND UNMATING WITH AGP-1X AND AGP-2X/4X CIRCUITS.
5. FINISH: CONTACTS, 1.27 MIN. MICROMETERS NICKEL ALL OVER,
   0.0254-0.0762 MICROMETERS GOLD OVER NICKEL IN CONTACT AREA.
   2.54 MIN. MICROMETERS TIN OVER NICKEL ON SOLDER TAILS.
6. OBSOLETE PARTS: OBSOLETE CIS STREAMLINING PER D. RENAUD/D. SINISI

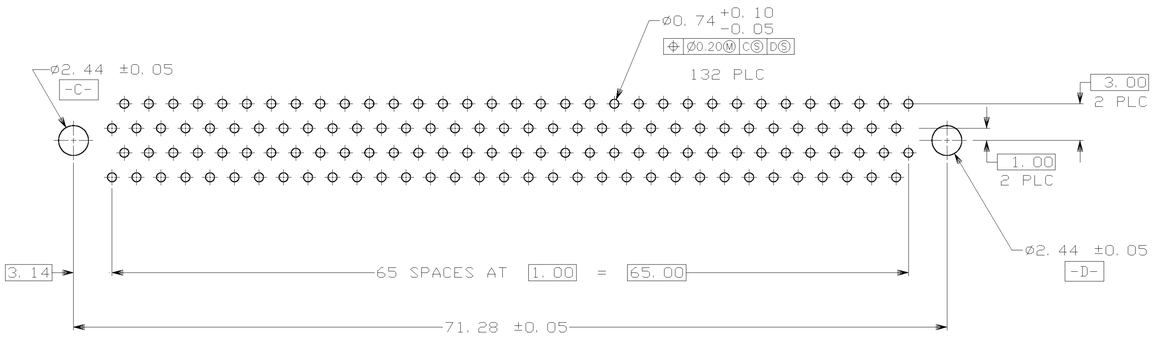

RECOMMENED CONNECTOR MOUNTING HOLE PATTERN
(CONNECTOR SIDE SHOWN)

6 OBSOLETE	5	3.18	~~5145376-6~~
	5	2.54	~~5145376-5~~
	5	3.18	5145376-3
	5	2.54	5145376-2
	5	2.16	5145376-1
	PLATING	W	PART NO

THIS DRAWING IS A CONTROLLED DOCUMENT.

DIMENSIONS: mm

TOLERANCES UNLESS OTHERWISE SPECIFIED:
0 PLC ± –
1 PLC ± –
2 PLC ± 0.13
3 PLC ± –
4 PLC ± –
ANGLES ± 2°

MATERIAL 1

FINISH 2 3 5

DWN GAVIN ZHANG 23MAR05
CHK STEVEN YAO 23MAR05
APVD I. ENOMOTO 23MAR05

PRODUCT SPEC —
APPLICATION SPEC —
WEIGHT —

Tyco Electronics
Tyco Electronics Corporation
Shanghai, P.R.China, 200233

NAME ASSEMBLY, 132 POSITION
1mm, CARD EDGE CONNECTOR

SIZE	CAGE CODE	DRAWING NO	RESTRICTED TO
A1	00779	C-5145376	—

CUSTOMER DRAWING

SCALE	SHEET	REV
4:1	1 OF 1	A1