No.	Changes and/or Note No.	Date	Sign	No.	Changes and/or Note No.	Date	Sign

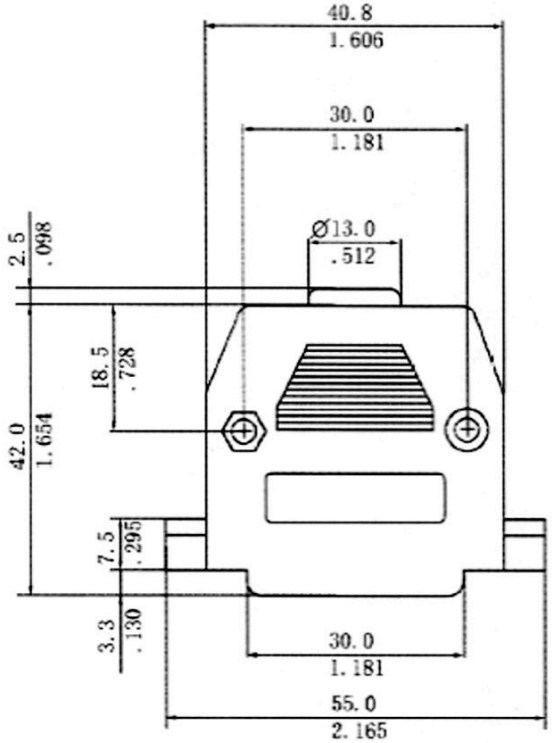

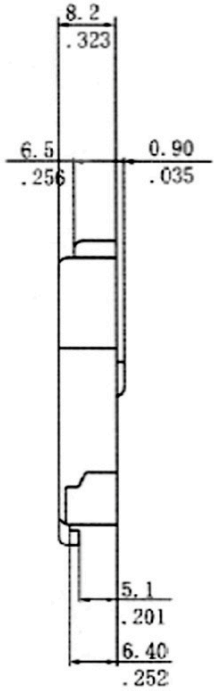

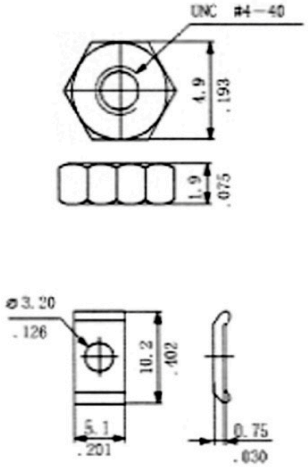

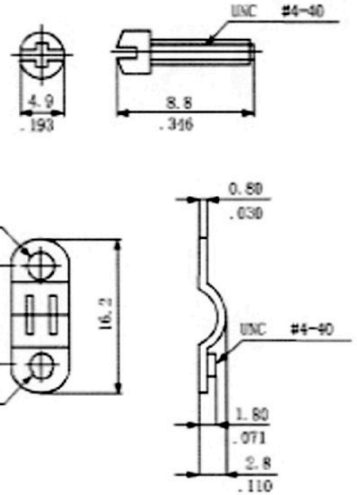

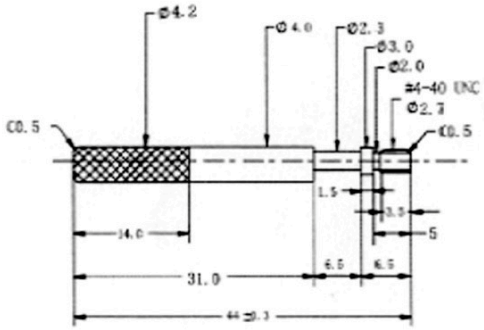

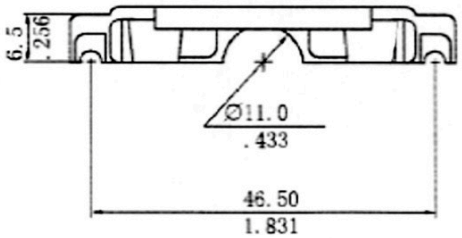

How to Order:		
2360-0102-23	CCOV-25-SCL-BK	Black
2360-0102-33	CCOV-25-SCL-LG	Light Grey

DATE	DRAWN	SCALE	MATERIAL TYPE
2011-09-20	MRR		
	APPROVED		REPLACES

encitech connectors AB

CCOV-25-SCL
Unshielded Plastic Hood

DRAWING No.