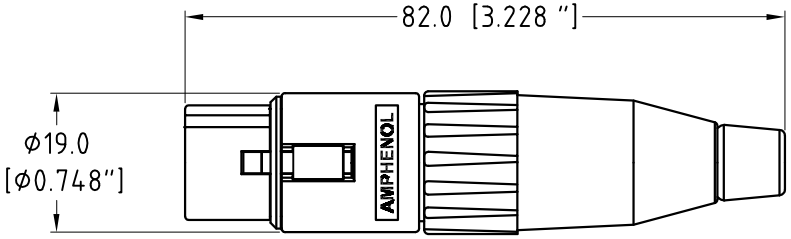

ACTUAL SIZE

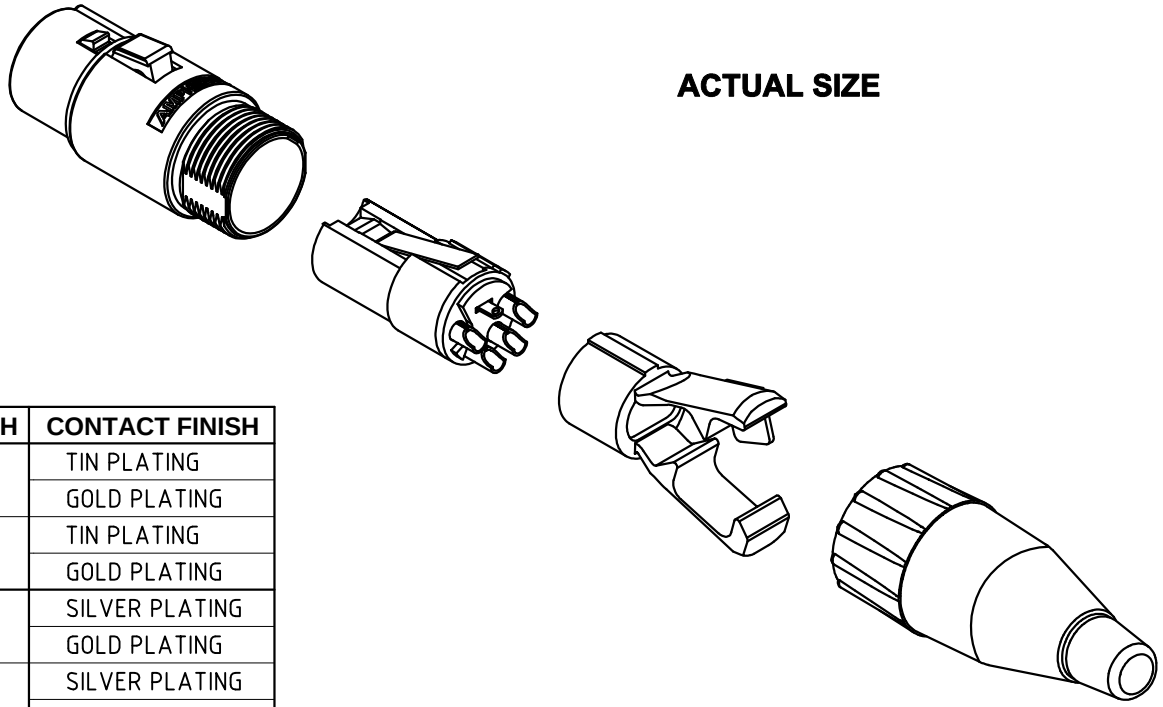

CAT P/No.	SHELL FINISH	CONTACT FINISH
AC4F	NICKEL	TIN PLATING
AC4F-AU		GOLD PLATING
AC4FB	BLACK	TIN PLATING
AC4FB-AU		GOLD PLATING
AC5F	NICKEL	SILVER PLATING
AC5F-AU		GOLD PLATING
AC5FB	BLACK	SILVER PLATING
AC5FB-AU		GOLD PLATING
AC6AF	NICKEL	SILVER PLATING
AC6AF-AU		GOLD PLATING
AC6AFB	BLACK	SILVER PLATING
AC6AFB-AU		GOLD PLATING
AC7F	NICKEL	GOLD PLATING
AC7FB	BLACK	

UNLESS OTHERWISE SPECIFIED TOLERANCE TO BE LINEAR: X ± 0.5, X,X ± 0.1, X,XX± 0.05 ANGULAR: X° ± 1°, X°X' ± 30', X°X'X" ± 15'	THIS DOCUMENT IS THE PROPERTY OF AMPHENOL AUSTRALIA PTY. LTD.. NO PART THEREOF MAY BE REPRODUCED AND USED WITHOUT THE PRIOR WRITTEN CONSENT OF THE OWNER				0	FIRST ISSUE	L.V	01-05-06	----
					REV.	CHANGE DETAILS	BY	DATE	CHG/No
BREAK ALL SHARP EDGES AND REMOVE ALL BURRS	CAD FILE: 55010226000221	DRN: L.V	DATE: 01-05-06	TITLE: AC*F LINE CONNECTOR CUSTOMER DWG	Amphenol Amphenol Australia Pty.Ltd, 2 Fiveways Blvd, Keysborough, Vic3173				
DO NOT SCALE	MATL: REFER TO COMPONENT	CKD: M.N.H	DATE: 01-05-06		DRAWING NO.			SHEET	
	FINISH: REFER TO COMPONENT	APP'D: P.M	DATE: 01-05-06		55010226-000-2			2 OF 2	
DIMENSIONS IN MILIMETRES	THIRD ANGLE PROJECTION	SCALE: 1:1 UOS	PART No: REFER TO CHART	SIZE: A4					