KU4100 Enclosure Series

The versatile **KU4100 series** features a compact design with different terminal configuration options. They are available in six widths with double level terminal locations. Terminal configuration options include blank enclosures with no terminal openings, fixed PCB terminals and pluggable PCB terminals.

MATERIALS

Housing

Housing Shell: Polycarbonate, 10% Glass Filled
Base: Polycarbonate, 10% Glass Filled

Terminals

Housing: Polyamide
Terminal Pins: Tinned Brass

TEMPERATURE RATING:

115°C (239°F) UL94V0
Housing: Light Gray Cover with Black Base

PROTECTION

KU4100 enclosures have an IP30 rating, IP20 for terminal openings, (finger protected) and meet VBG4 and other European accident prevention requirements.

CONSTRUCTION

The KU4100 enclosure series housings are supplied as unassembled kits. Each kit consists of a flat base, a housing cover and terminal sets where applicable. The terminals are set on two levels to maximize space. The terminals are machine solderable. Integral printed circuit guides are molded into the cover for proper board insertion and containment. Multiple boards can be mounted in each enclosure, usually 2 PCBs are used with the terminals and one additional PCB can be used for display or control elements in the enclosure front.

TERMINALS

There are 4 options available; no terminal openings, fixed PCB terminals, pluggable PCB terminals and high current terminals. The terminal blocks are all machine solderable.
The option of no terminal openings allows for custom openings to be made to accommodate alternate connector types.
Fixed PCB terminals are standard screw cage clamp style terminal blocks. Terminal covers are available for the fixed PCB terminal version to cover unused terminals. The terminal cover is a 12 poles strip that is breakable into individual poles. It snaps onto the enclosure covering the screw hole and wire entry areas.
Pluggable PCB terminals feature male pin headers and female screw cage clamp plugs that can be plugged/unplugged. **Power source must be disconnected before plugging/unplugging terminals.**
High current terminals feature rising clamps where the wire is clamped between the clamp and the terminal strip.

MOUNTING

The KU4100 series can easily be mounted on standard 35mm DIN rail by means of the integral mounting foot and DIN clip.

CUSTOMIZATION

We can supply the KU4100 series enclosures with many custom options including:

- Partial terminal loading
- Enclosure bus connections
- Ventilation Slots
- Machining of custom holes

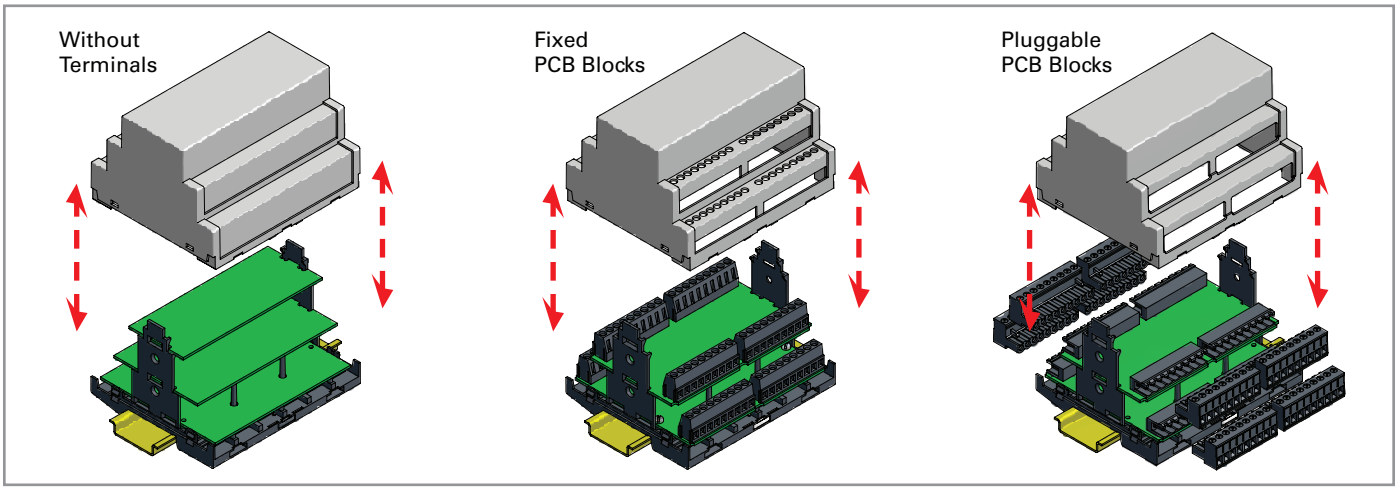

17.5mm Enclosure

Without Terminals

TECHNICAL INFORMATION

Electrical:
–

Housing Material:
Glass-filled Polycarbonate

Temperature Range:
Up to 115°C (239°F)

Flammability Rating:
UL94 V-O

Color:
Light Gray Cover, Black Base

Terminal Type:
–

Terminal Screw Size:
–

Recommended Torque:
–

PCB Locations:
(1) Vertical, Perpendicular

Mounting:
35mm DIN Rail

ORDERING INFORMATION

Part Number	Type	Description	PCB Connection
91.800	KU4187B	Without Terminals	None

ACCESSORIES

Accessories	Part Number	Type
1 Meter DIN Rail	2511120/1M	TS35x7.5/1M

ENCLOSURE DRAWING (To convert to inches divide by 25.4.)

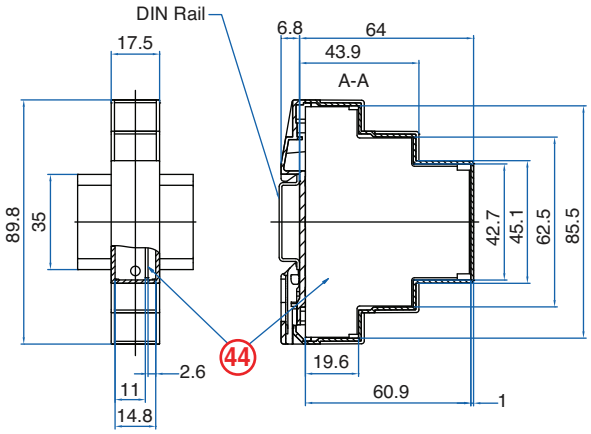

PCB DRAWING (To convert to inches divide by 25.4.)

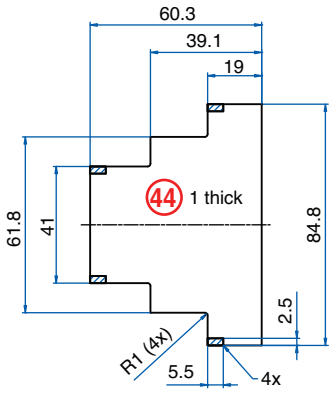

unused space

12 Terminal

Fixed PCB Blocks

TECHNICAL INFORMATION

Electrical:
12A, 250V, 24-12 AWG

Housing Material:
Glass-filled Polycarbonate

Temperature Range:
Up to 115°C (239°F)

Flammability Rating:
UL94 V-O

Color:
Light Gray Cover, Black Base and Terminals

Terminal Type:
Screw / Rising Clamp

Terminal Screw Size:
M2.5

Recommended Torque:
0.4Nm

PCB Locations:
(1) Vertical, Perpendicular

Mounting:
35mm DIN Rail

ORDERING INFORMATION

Part Number	Type	Description	PCB Connection
91.801	KU4187F	Fixed PCB Terminal	Machine Solder

ACCESSORIES

Accessories	Part Number	Type
1 Meter DIN Rail	2511120/1M	TS35x7.5/1M
Terminal Cover (12 pole)	91.801.1	TCS/12

ENCLOSURE DRAWING (To convert to inches divide by 25.4.)

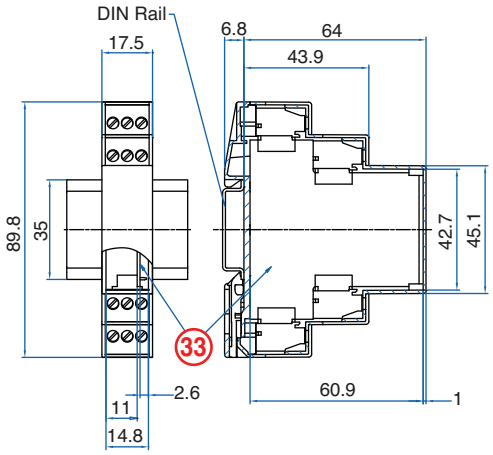

PCB DRAWING (To convert to inches divide by 25.4.)

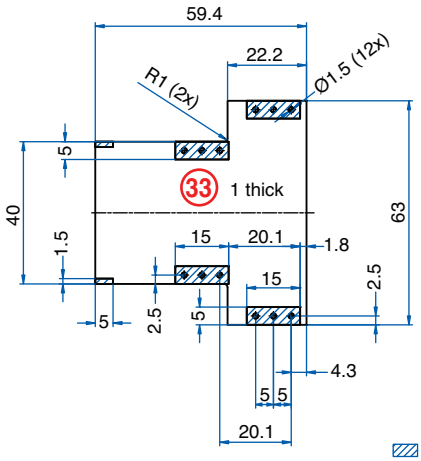

unused space

12 Terminal

Pluggable PCB Plugs / Headers

TECHNICAL INFORMATION

Electrical:
12A, 250V, 28-14 AWG

Housing Material:
Glass-filled Polycarbonate

Temperature Range:
Up to 115°C (239°F)

Flammability Rating:
UL94 V-O

Color:
Light Gray Cover, Black Base and Terminals

Terminal Type:
Screw / Rising Clamp

Terminal Screw Size:
M2.5

Recommended Torque:
0.4Nm

PCB Locations:
(1) Vertical, Perpendicular

Mounting:
35mm DIN Rail

ORDERING INFORMATION

Part Number	Type	Description	PCB Connection
91.802	KU4187P	Pluggable PCB Terminals	Machine Solder

ACCESSORIES

Accessories	Part Number	Type
1 Meter DIN Rail	2511120/1M	TS35x7.5/1M

ENCLOSURE DRAWING (To convert to inches divide by 25.4.)

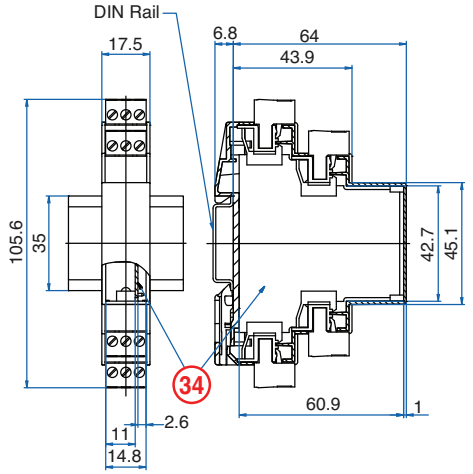

PCB DRAWING (To convert to inches divide by 25.4.)

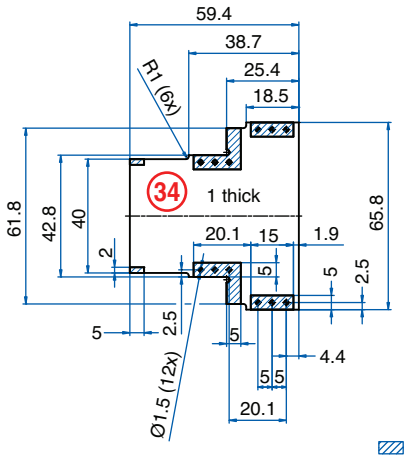

unused space

8 Terminal

High Current PCB Blocks

TECHNICAL INFORMATION

Electrical:
40A, 250V, 20-8 AWG

Housing Material:
Glass-filled Polycarbonate

Temperature Range:
Up to 115°C (239°F)

Flammability Rating:
UL94 V-O

Color:
Light Gray Cover, Black Base

Terminal Type:
Screw / Rising Clamp

Terminal Screw Size:
M3.5

Recommended Torque:
1.2Nm

PCB Locations:
(1) Vertical, Perpendicular

Mounting:
35mm DIN Rail

ORDERING INFORMATION

Part Number	Type	Description	PCB Connection
91.803	KU4187HC	High Current Terminals	Machine Solder

ACCESSORIES

Accessories	Part Number	Type
1 Meter DIN Rail	2511120/1M	TS35x7.5/1M

ENCLOSURE DRAWING (To convert to inches divide by 25.4.)

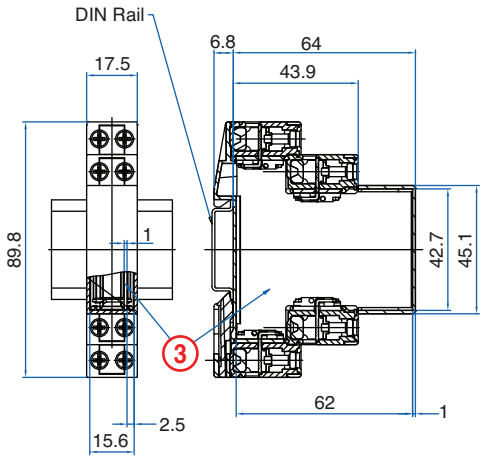

PCB DRAWING (To convert to inches divide by 25.4.)

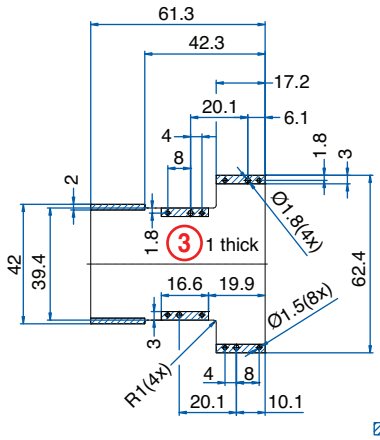

unused space

35mm Enclosure

Without Terminals

TECHNICAL INFORMATION

Electrical:
–

Housing Material:
Glass-filled Polycarbonate

Temperature Range:
Up to 115°C (239°F)

Flammability Rating:
UL94 V-O

Color:
Light Gray Cover, Black Base

Terminal Type:
–

Terminal Screw Size:
–

Recommended Torque:
–

PCB Locations:
(3) Vertical, Parallel

Mounting:
35mm DIN Rail

ORDERING INFORMATION

Part Number	Type	Description	PCB Connection
91.810	KU4188B	Without Terminals	None

ACCESSORIES

Accessories	Part Number	Type
1 Meter DIN Rail	2511120/1M	TS35x7.5/1M

ENCLOSURE DRAWING (To convert to inches divide by 25.4.)

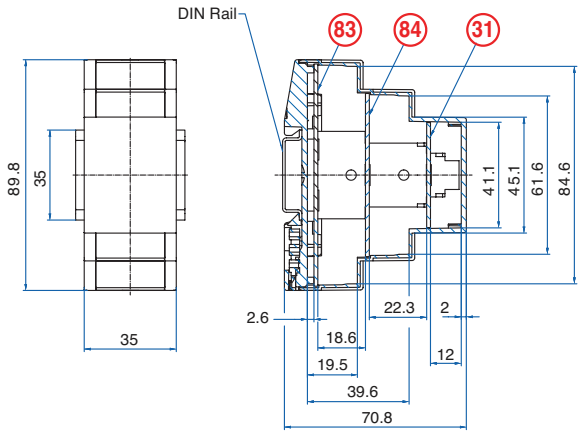

PCB DRAWING (To convert to inches divide by 25.4.)

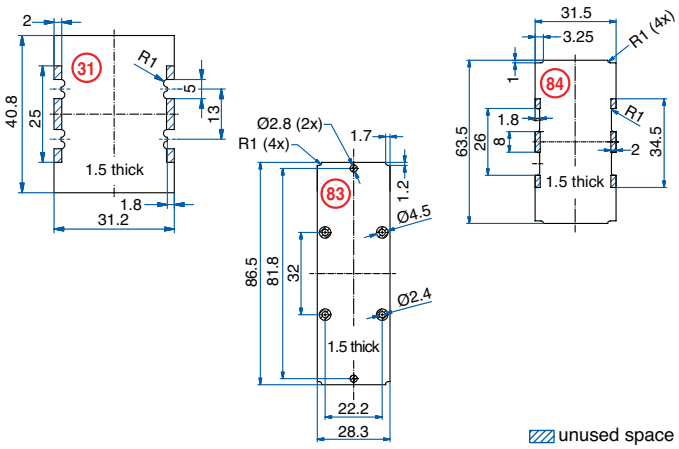

20 Terminal

Fixed PCB Blocks

TECHNICAL INFORMATION

Electrical:
12A, 250V, 24-12 AWG

Housing Material:
Glass-filled Polycarbonate

Temperature Range:
Up to 115°C (239°F)

Flammability Rating:
UL94 V-O

Color:
Light Gray Cover, Black Base and Terminals

Terminal Type:
Screw / Rising Clamp

Terminal Screw Size:
M2.5

Recommended Torque:
0.4Nm

PCB Locations:
(2) Vertical, Parallel

Mounting:
35mm DIN Rail

ORDERING INFORMATION

Part Number	Type	Description	PCB Connection
91.811	KU4188F	Fixed PCB Terminal	Machine Solder

ACCESSORIES

Accessories	Part Number	Type
1 Meter DIN Rail	2511120/1M	TS35x7.5/1M
Terminal Cover (12 pole)	91.801.1	TCS/12

ENCLOSURE DRAWING (To convert to inches divide by 25.4.)

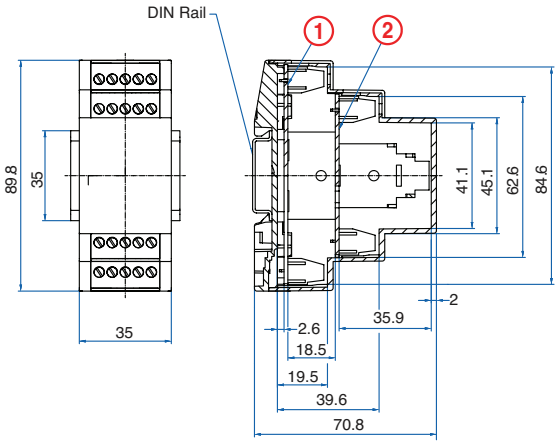

PCB DRAWING (To convert to inches divide by 25.4.)

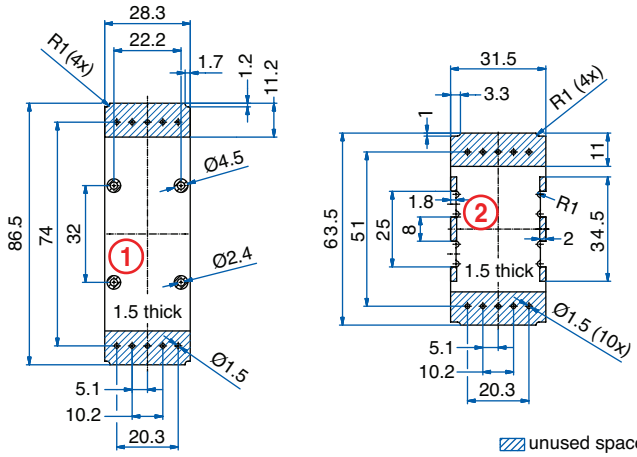

KU4100 Enclosure Series

20 Terminal

Pluggable PCB Plugs / Headers

TECHNICAL INFORMATION

Electrical:
12A, 250V, 28-14 AWG

Housing Material:
Glass-filled Polycarbonate

Temperature Range:
Up to 115°C (239°F)

Flammability Rating:
UL94 V-O

Color:
Light Gray Cover, Black Base and Terminals

Terminal Type:
Screw / Rising Clamp

Terminal Screw Size:
M2.5

Recommended Torque:
0.4Nm

PCB Locations:
(2) Vertical, Parallel

Mounting:
35mm DIN Rail

ORDERING INFORMATION

Part Number	Type	Description	PCB Connection
91.812	KU4188P	Pluggable PCB Terminals	Machine Solder

ACCESSORIES

Accessories	Part Number	Type
1 Meter DIN Rail	2511120/1M	TS35x7.5/1M

ENCLOSURE DRAWING (To convert to inches divide by 25.4.)

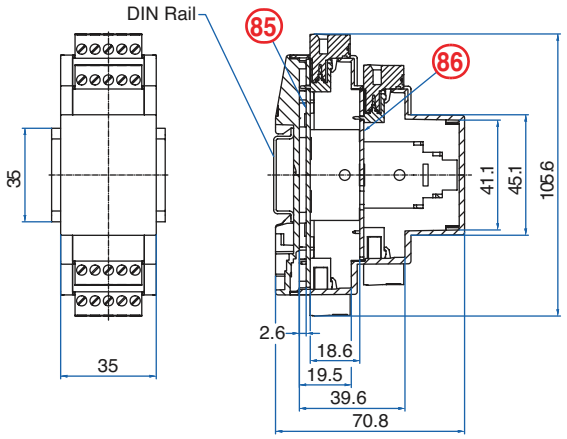

PCB DRAWING (To convert to inches divide by 25.4.)

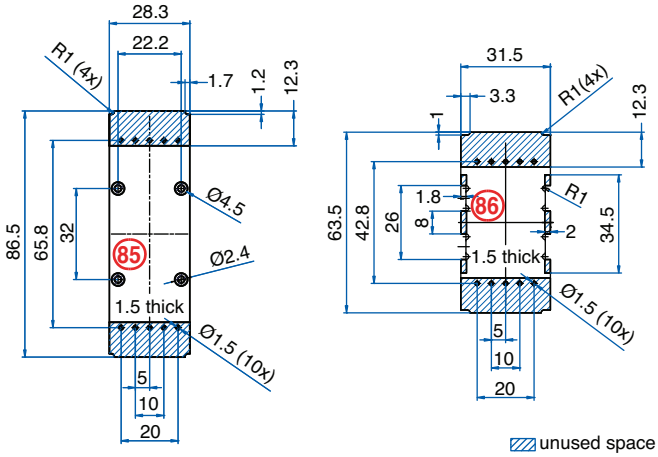

unused space

16 Terminal

High Current PCB Blocks

TECHNICAL INFORMATION

Electrical:
40A, 250V, 20-8 AWG

Housing Material:
Glass-filled Polycarbonate

Temperature Range:
Up to 115°C (239°F)

Flammability Rating:
UL94 V-O

Color:
Light Gray Cover, Black Base

Terminal Type:
Screw / Rising Clamp

Terminal Screw Size:
M3.5

Recommended Torque:
1.2Nm

PCB Locations:
(2) Vertical, Perpendicular

Mounting:
35mm DIN Rail

ORDERING INFORMATION

Part Number	Type	Description	PCB Connection
91.813	KU4188HC	High Current Terminals	Machine Solder

ACCESSORIES

Accessories	Part Number	Type
1 Meter DIN Rail	2511120/1M	TS35x7.5/1M

ENCLOSURE DRAWING (To convert to inches divide by 25.4.)

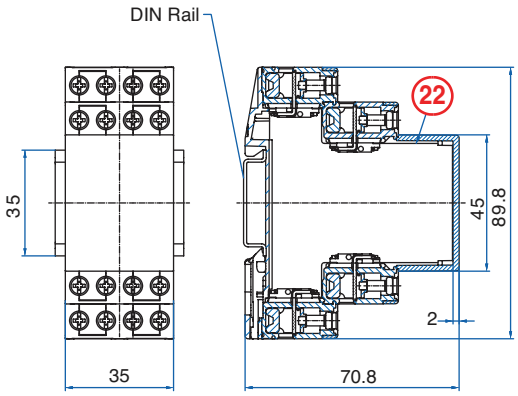

PCB DRAWING (To convert to inches divide by 25.4.)

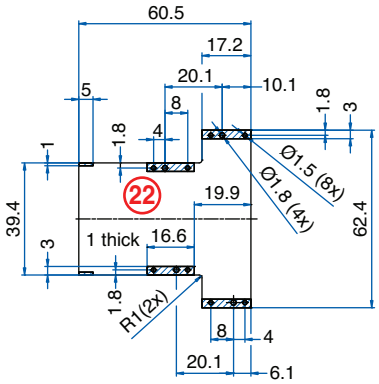

unused space

52.5mm Enclosure

Without Terminals

TECHNICAL INFORMATION

Electrical:
–

Housing Material:
Glass-filled Polycarbonate

Temperature Range:
Up to 115°C (239°F)

Flammability Rating:
UL94 V-O

Color:
Light Gray Cover, Black Base

Terminal Type:
–

Terminal Screw Size:
–

Recommended Torque:
–

PCB Locations:
(3) Vertical, Parallel

Mounting:
35mm DIN Rail

ORDERING INFORMATION

Part Number	Type	Description	PCB Connection
91.820	KU4184B	Without Terminals	None

ACCESSORIES

Accessories	Part Number	Type
1 Meter DIN Rail	2511120/1M	TS35x7.5/1M

ENCLOSURE DRAWING (To convert to inches divide by 25.4.)

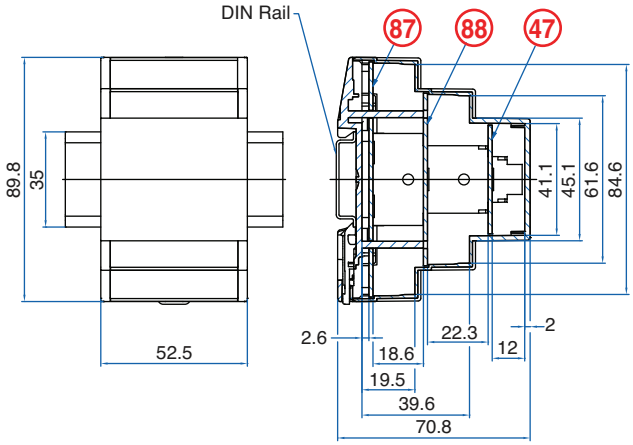

PCB DRAWING (To convert to inches divide by 25.4.)

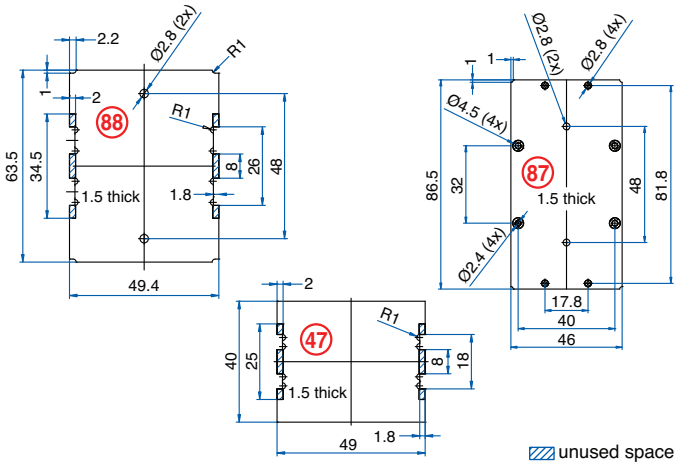

36 Terminal

Fixed PCB Blocks

TECHNICAL INFORMATION

Electrical:
12A, 250V, 24-12 AWG

Housing Material:
Glass-filled Polycarbonate

Temperature Range:
Up to 115°C (239°F)

Flammability Rating:
UL94 V-O

Color:
Light Gray Cover, Black Base and Terminals

Terminal Type:
Screw / Rising Clamp

Terminal Screw Size:
M2.5

Recommended Torque:
0.4Nm

PCB Locations:
(2) Vertical, Parallel

Mounting:
35mm DIN Rail

ORDERING INFORMATION

Part Number	Type	Description	PCB Connection
91.821	KU4184F	Fixed PCB Terminals	Machine Solder

ACCESSORIES

Accessories	Part Number	Type
1 Meter DIN Rail	2511120/1M	TS35x7.5/1M
Terminal Cover (12 pole)	91.801.1	TCS/12

ENCLOSURE DRAWING (To convert to inches divide by 25.4.)

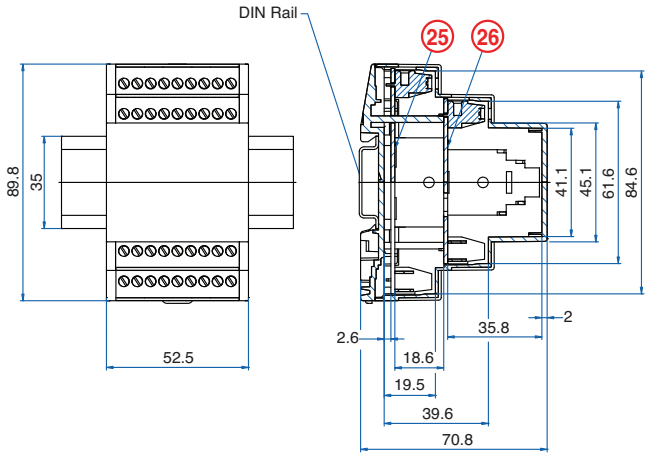

PCB DRAWING (To convert to inches divide by 25.4.)

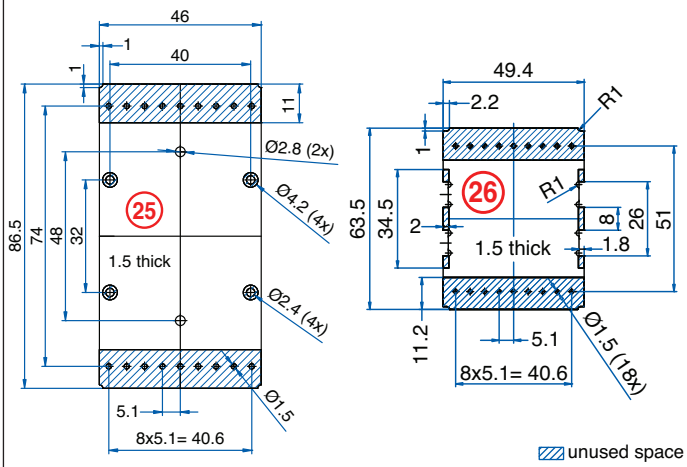

KU4100 Enclosure Series

36 Terminal

Pluggable PCB Plugs / Headers

TECHNICAL INFORMATION

Electrical:
12A, 250V, 28-14 AWG

Housing Material:
Glass-filled Polycarbonate

Temperature Range:
Up to 115°C (239°F)

Flammability Rating:
UL94 V-O

Color:
Light Gray Cover, Black Base and Terminals

Terminal Type:
Screw / Rising Clamp

Terminal Screw Size:
M2.5

Recommended Torque:
0.4Nm

PCB Locations:
(2) Vertical, Parallel

Mounting:
35mm DIN Rail

ORDERING INFORMATION

Part Number	Type	Description	PCB Connection
91.822	KU4184P	Pluggable PCB Terminals	Machine Solder

ACCESSORIES

Accessories	Part Number	Type
1 Meter DIN Rail	2511120/1M	TS35x7.5/1M

ENCLOSURE DRAWING (To convert to inches divide by 25.4.)

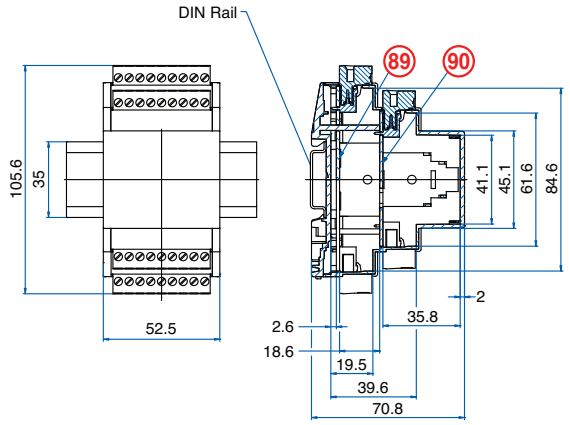

PCB DRAWING (To convert to inches divide by 25.4.)

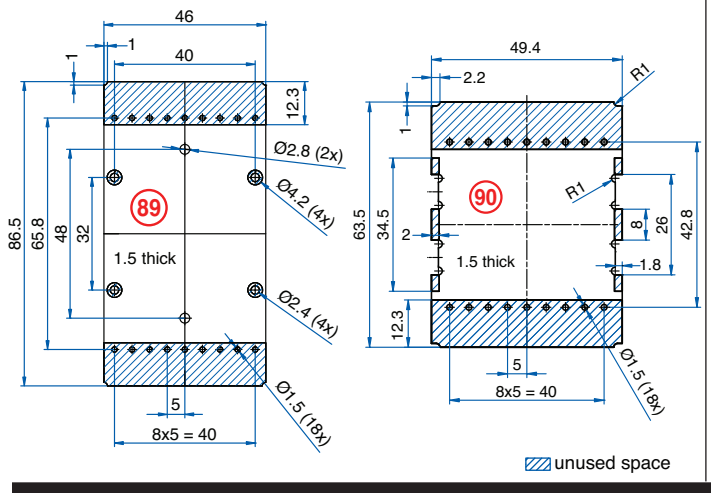

70mm Enclosure

Without Terminals

TECHNICAL INFORMATION

Electrical:
–

Housing Material:
Glass-filled Polycarbonate

Temperature Range:
Up to 115°C (239°F)

Flammability Rating:
UL94 V-O

Color:
Light Gray Cover, Black Base

Terminal Type:
–

Terminal Screw Size:
–

Recommended Torque:
–

PCB Locations:
(3) Vertical, Parallel

Mounting:
35mm DIN Rail

ORDERING INFORMATION

Part Number	Type	Description	PCB Connection
91.830	KU4189B	Without Terminals	None

ACCESSORIES

Accessories	Part Number	Type
1 Meter DIN Rail	2511120/1M	TS35x7.5/1M

ENCLOSURE DRAWING (To convert to inches divide by 25.4.)

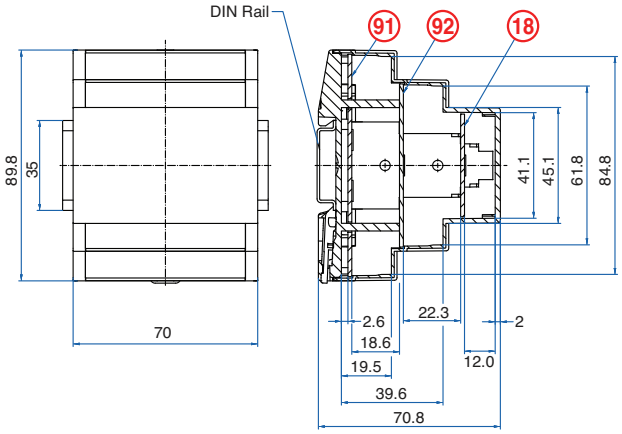

PCB DRAWING (To convert to inches divide by 25.4.)

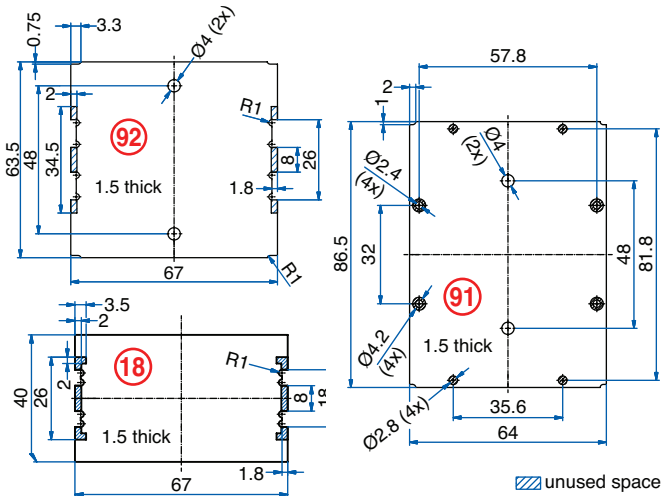

48 Terminal

Fixed PCB Blocks

TECHNICAL INFORMATION

Electrical:
12A, 250V, 24-12 AWG

Housing Material:
Glass-filled Polycarbonate

Temperature Range:
Up to 115°C (239°F)

Flammability Rating:
UL94 V-O

Color:
Light Gray Cover, Black Base and Terminals

Terminal Type:
Screw / Rising Clamp

Terminal Screw Size:
M2.5

Recommended Torque:
0.4Nm

PCB Locations:
(2) Vertical, Parallel

Mounting:
35mm DIN Rail

ORDERING INFORMATION

Part Number	Type	Description	PCB Connection
91.831	KU4189F	Fixed PCB Terminals	Machine Solder

ACCESSORIES

Accessories	Part Number	Type
1 Meter DIN Rail	2511120/1M	TS35x7.5/1M
Terminal Cover (12 pole)	91.801.1	TCS/12

ENCLOSURE DRAWING (To convert to inches divide by 25.4.)

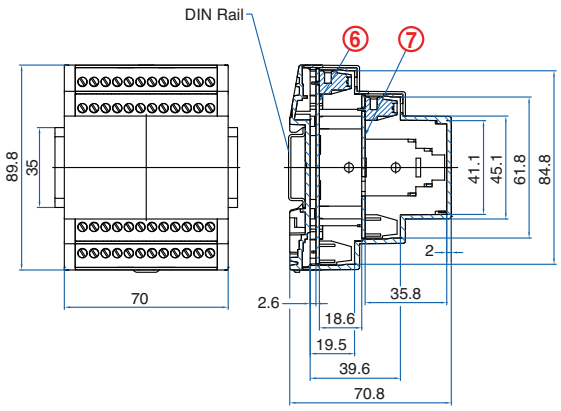

PCB DRAWING (To convert to inches divide by 25.4.)

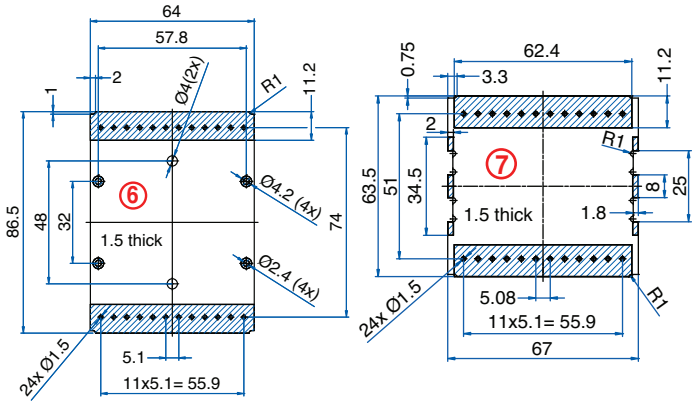

unused space

48 Terminal

Pluggable PCB Plugs / Headers

TECHNICAL INFORMATION

Electrical:
12A, 250V, 28-14 AWG

Housing Material:
Glass-filled Polycarbonate

Temperature Range:
Up to 115°C (239°F)

Flammability Rating:
UL94 V-O

Color:
Light Gray Cover, Black Base and Terminals

Terminal Type:
Screw / Rising Clamp

Terminal Screw Size:
M2.5

Recommended Torque:
0.4Nm

PCB Locations:
(2) Vertical, Parallel

Mounting:
35mm DIN Rail

ORDERING INFORMATION

Part Number	Type	Description	PCB Connection
91.832	KU4189P	Pluggable PCB Terminals	Machine Solder

ACCESSORIES

Accessories	Part Number	Type
1 Meter DIN Rail	2511120/1M	TS35x7.5/1M

ENCLOSURE DRAWING (To convert to inches divide by 25.4.)

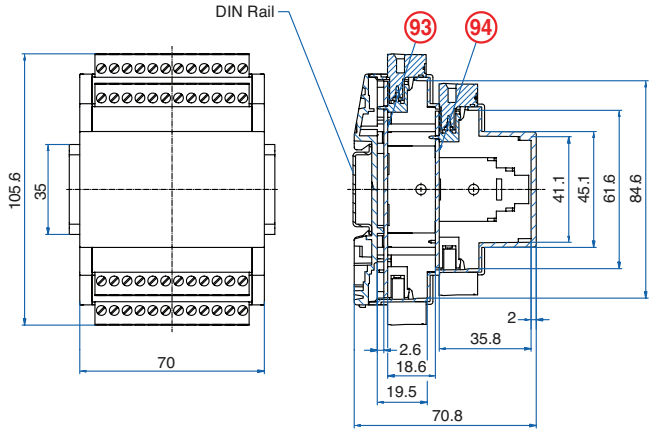

PCB DRAWING (To convert to inches divide by 25.4.)

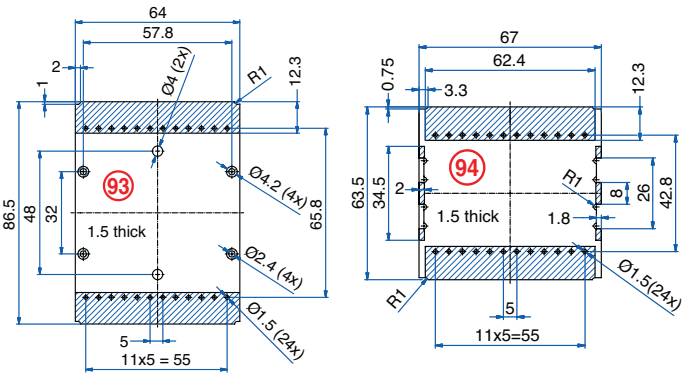

unused space

KU4100 Enclosure Series

105mm Enclosure

Without Terminals

TECHNICAL INFORMATION

Electrical:
–

Housing Material:
Glass-filled Polycarbonate

Temperature Range:
Up to 115°C (239°F)

Flammability Rating:
UL94 V-O

Color:
Light Gray Cover, Black Base

Terminal Type:
–

Terminal Screw Size:
–

Recommended Torque:
–

PCB Locations:
(3) Vertical, Parallel

Mounting:
35mm DIN Rail

ORDERING INFORMATION

Part Number	Type	Description	PCB Connection
91.840	KU4190B	Without Terminals	None

ACCESSORIES

Accessories	Part Number	Type
1 Meter DIN Rail	2511120/1M	TS35x7.5/1M

ENCLOSURE DRAWING (To convert to inches divide by 25.4.)

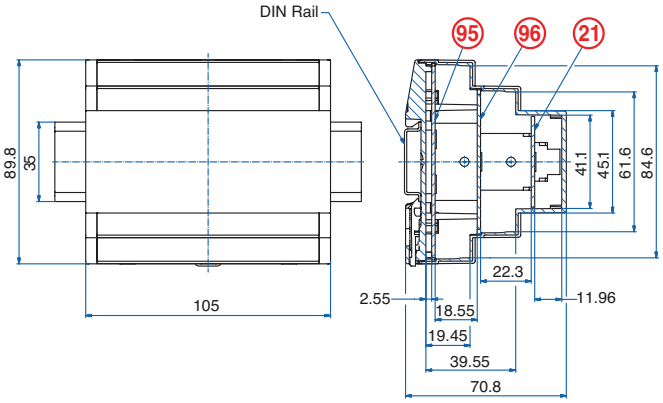

PCB DRAWING (To convert to inches divide by 25.4.)

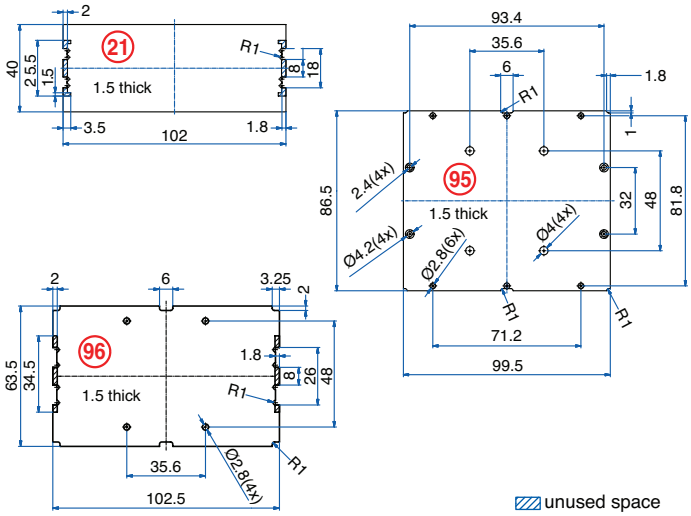

unused space

72 Terminal

Fixed PCB Blocks

TECHNICAL INFORMATION

Electrical:
12A, 250V, 24-12 AWG

Housing Material:
Glass-filled Polycarbonate

Temperature Range:
Up to 115°C (239°F)

Flammability Rating:
UL94 V-O

Color:
Light Gray Cover, Black Base and Terminals

Terminal Type:
Screw / Rising Clamp

Terminal Screw Size:
M2.5

Recommended Torque:
0.4Nm

PCB Locations:
(2) Vertical, Parallel

Mounting:
35mm DIN Rail

ORDERING INFORMATION

Part Number	Type	Description	PCB Connection
91.841	KU4190F	Fixed PCB Terminals	Machine Solder

ACCESSORIES

Accessories	Part Number	Type
1 Meter DIN Rail	2511120/1M	TS35x7.5/1M
Terminal Cover (12 pole)	91.801.1	TCS/12

ENCLOSURE DRAWING (To convert to inches divide by 25.4.)

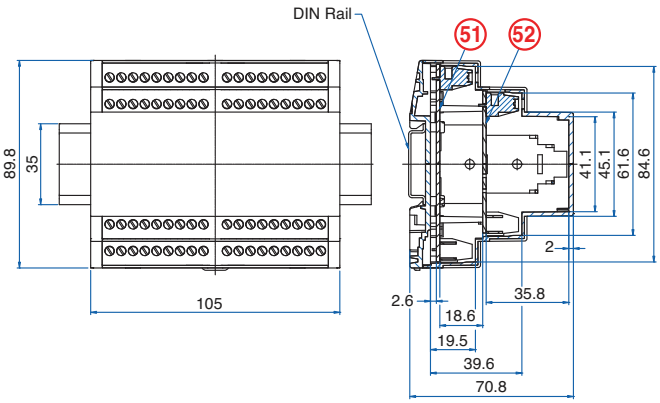

PCB DRAWING (To convert to inches divide by 25.4.)

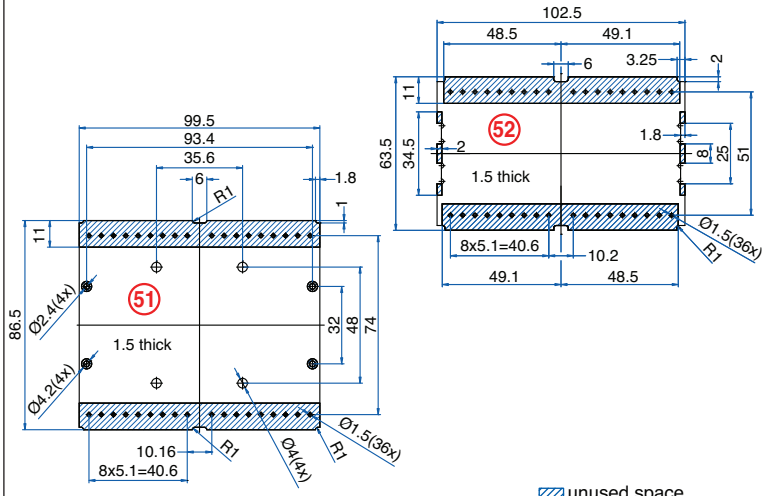

unused space

72 Terminal

Pluggable PCB Plugs / Headers

TECHNICAL INFORMATION

Electrical:
12A, 250V, 28-14 AWG

Housing Material:
Glass-filled Polycarbonate

Temperature Range:
Up to 115°C (239°F)

Flammability Rating:
UL94 V-O

Color:
Light Gray Cover, Black Base and Terminals

Terminal Type:
Screw / Rising Clamp

Terminal Screw Size:
M2.5

Recommended Torque:
0.4Nm

PCB Locations:
(2) Vertical, Parallel

Mounting:
35mm DIN Rail

ORDERING INFORMATION

Part Number	Type	Description	PCB Connection
91.842	KU4190P	Pluggable PCB Terminals	Machine Solder

ACCESSORIES

Accessories	Part Number	Type
1 Meter DIN Rail	2511120/1M	TS35x7.5/1M

ENCLOSURE DRAWING (To convert to inches divide by 25.4.)

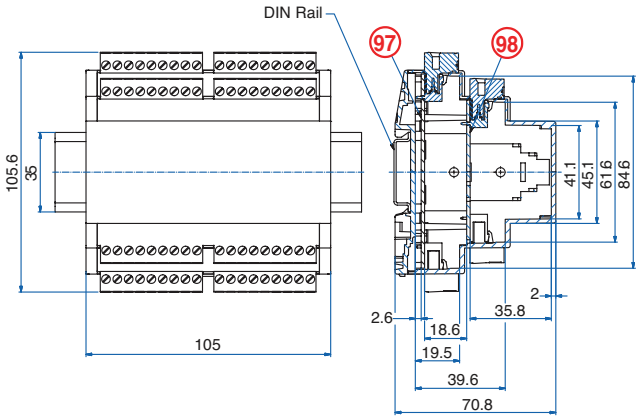

PCB DRAWING (To convert to inches divide by 25.4.)

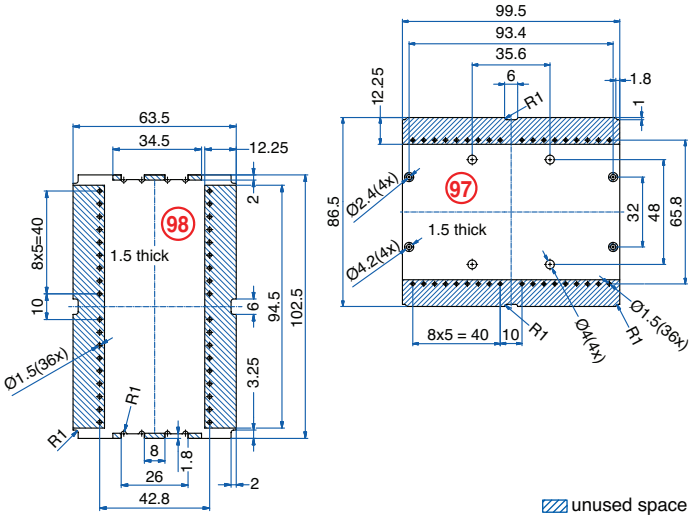

140mm Enclosure

Without Terminals

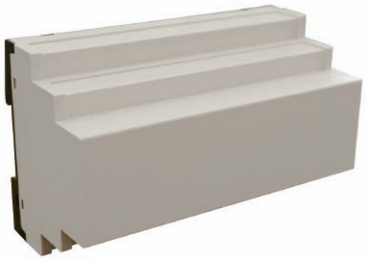

TECHNICAL INFORMATION

Electrical:
–

Housing Material:
Glass-filled Polycarbonate

Temperature Range:
Up to 115°C (239°F)

Flammability Rating:
UL94 V-O

Color:
Light Gray Cover, Black Base

Terminal Type:
–

Terminal Screw Size:
–

Recommended Torque:
–

PCB Locations:
(3) Vertical, Pararllel

Mounting:
35mm DIN Rail

ORDERING INFORMATION

Part Number	Type	Description	PCB Connection
91.850	KU4191B	Without Terminals	None

ACCESSORIES

Accessories	Part Number	Type
1 Meter DIN Rail	2511120/1M	TS35x7.5/1M

ENCLOSURE DRAWING (To convert to inches divide by 25.4.)

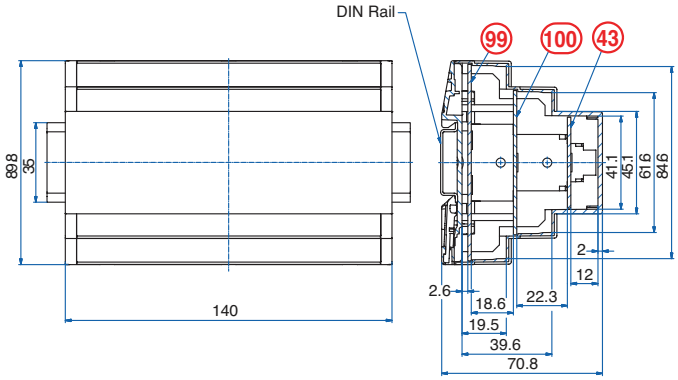

PCB DRAWING (To convert to inches divide by 25.4.)

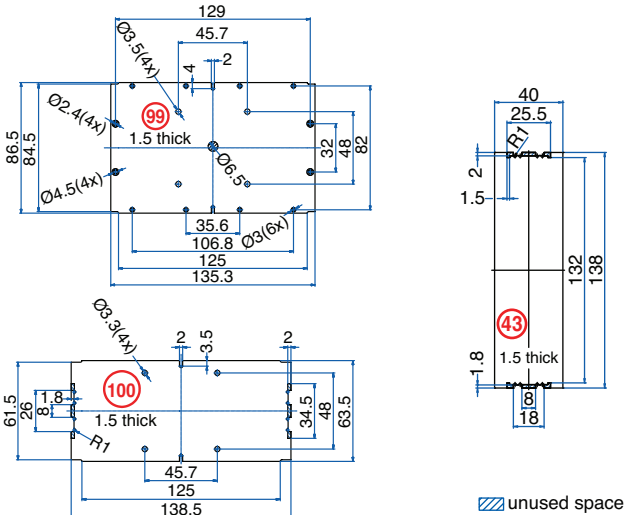

KU4100 Enclosure Series

96 Terminal
Fixed PCB Blocks

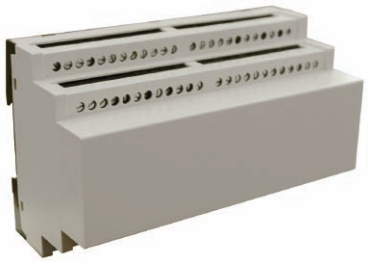

TECHNICAL INFORMATION

Electrical:
12A, 250V, 24-12 AWG
Housing Material:
Glass-filled Polycarbonate
Temperature Range:
Up to 115°C (239°F)
Flammability Rating:
UL94 V-O
Color:
Light Gray Cover, Black Base and Terminals

Terminal Type:
Screw / Rising Clamp
Terminal Screw Size:
M2.5
Recommended Torque:
0.4Nm
PCB Locations:
(2) Vertical, Parallel
Mounting:
35mm DIN Rail

ORDERING INFORMATION

Part Number	Type	Description	PCB Connection
91.851	KU4191F	Fixed PCB Terminals	Machine Solder

ACCESSORIES

Accessories	Part Number	Type
1 Meter DIN Rail	2511120/1M	TS35x7.5/1M
Terminal Cover (12 pole)	91.801.1	TCS/12

ENCLOSURE DRAWING (To convert to inches divide by 25.4.)

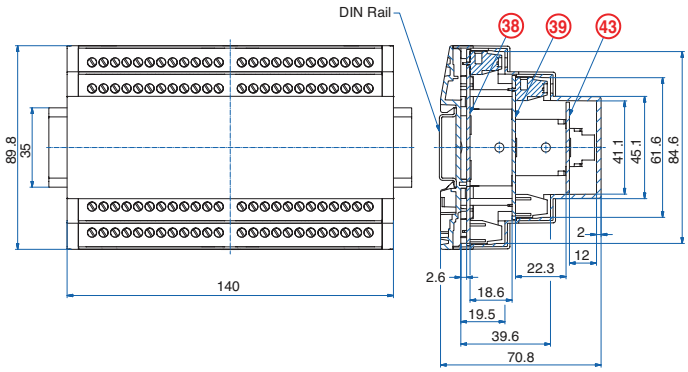

PCB DRAWING (To convert to inches divide by 25.4.)

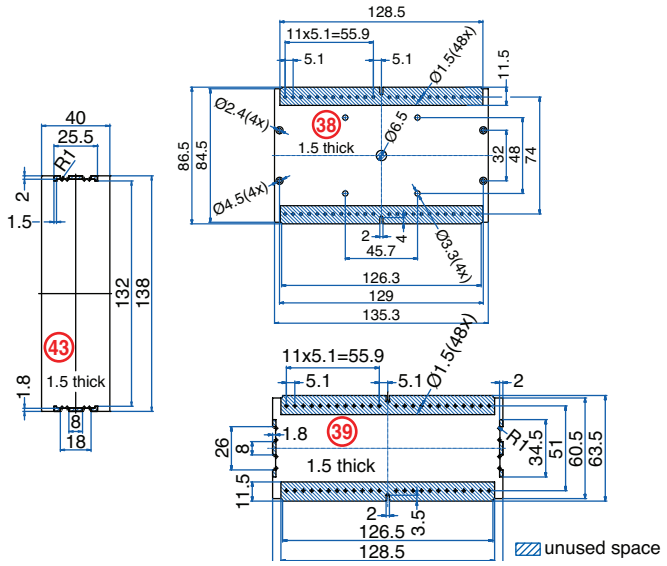

96 Terminal
Pluggable PCB Plugs / Headers

TECHNICAL INFORMATION

Electrical:
12A, 250V, 28-14 AWG
Housing Material:
Glass-filled Polycarbonate
Temperature Range:
Up to 115°C (239°F)
Flammability Rating:
UL94 V-O
Color:
Light Gray Cover, Black Base and Terminals

Terminal Type:
Screw / Rising Clamp
Terminal Screw Size:
M2.5
Recommended Torque:
0.4Nm
PCB Locations:
(2) Vertical, Parallel
Mounting:
35mm DIN Rail

ORDERING INFORMATION

Part Number	Type	Description	PCB Connection
91.852	KU4191P	Pluggable PCB Terminals	Machine Solder

ACCESSORIES

Accessories	Part Number	Type
1 Meter DIN Rail	2511120/1M	TS35x7.5/1M

ENCLOSURE DRAWING (To convert to inches divide by 25.4.)

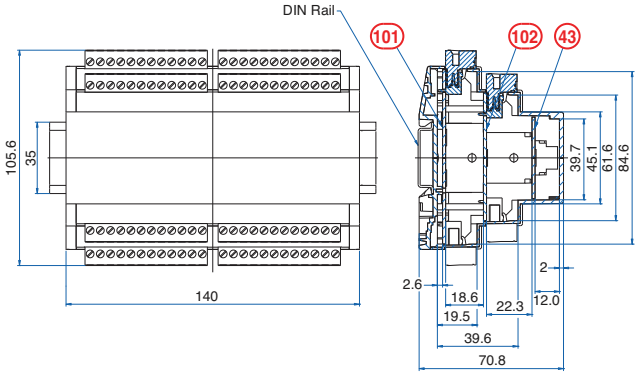
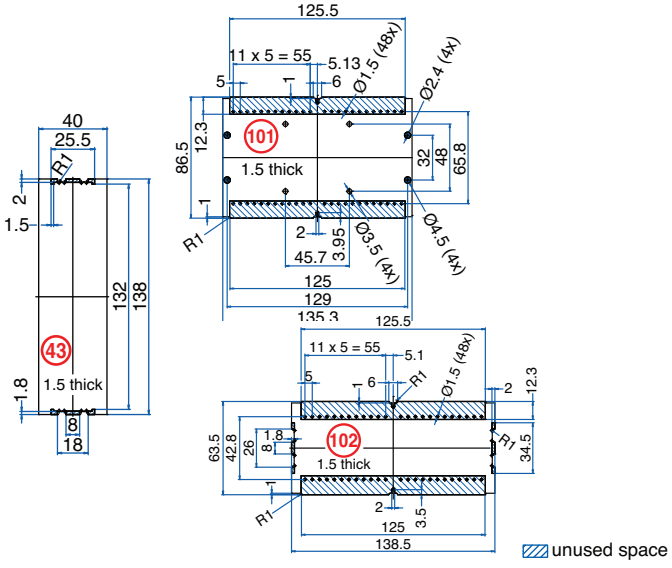
PCB DRAWING (To convert to inches divide by 25.4.)