THIS DRAWING IS UNPUBLISHED. RELEASED FOR PUBLICATION ,19 .
© COPYRIGHT 19 BY AMP INCORPORATED. ALL RIGHTS RESERVED.

LOC	DIST
DY	-

REVISIONS

P	LTR	DESCRIPTION	DATE	DWN	APVD
	O1	REVISED PER ECO-10-000445	11JAN10	KK	AEG

PROJ No.593-312

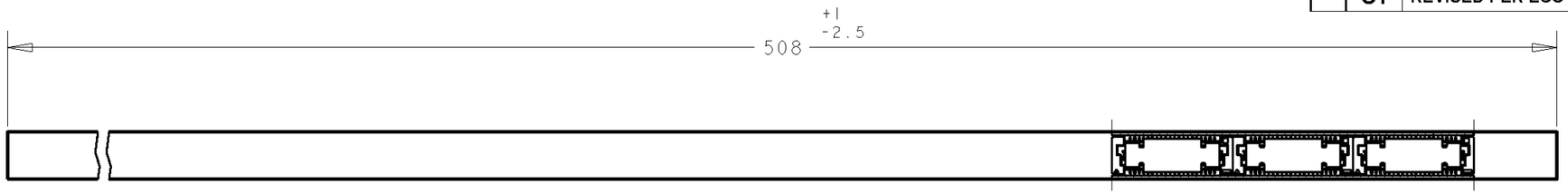

SECT "A"-"A"

SECT "B"-"B"

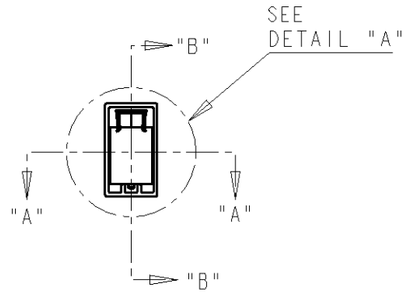

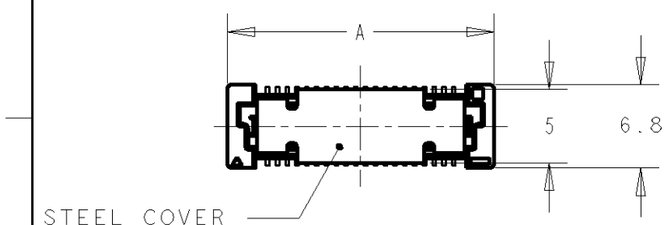

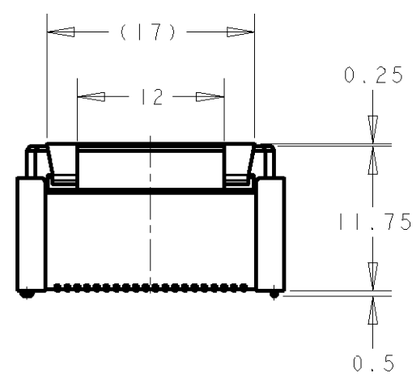

DETAIL "B"
(SCALE 2-1)

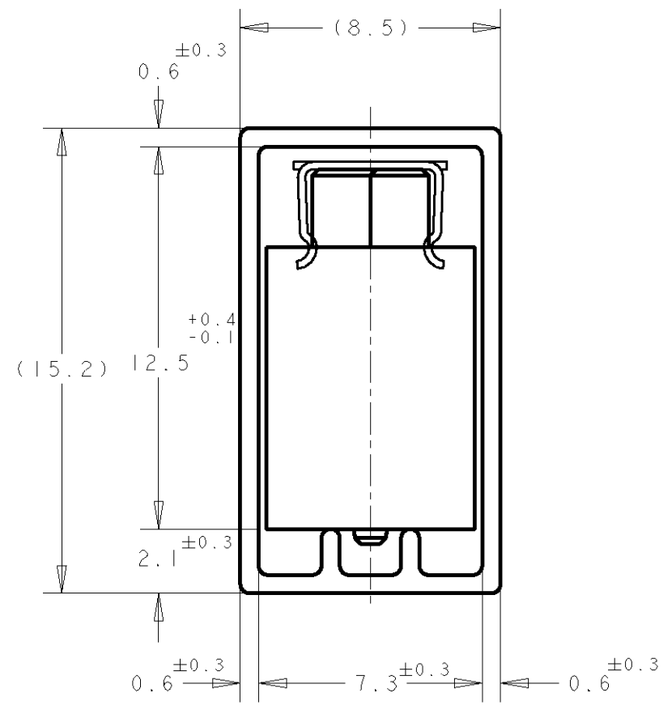

DETAIL "A"
(SCALE 5-1)

	QTY /TUBE	A	CONN P/N	POS.	PART NO.
	5	85.8	6- -0	200	6- -0
	6	77.8	5- -9	180	5- -9
1 OBSOLETE	6	69.8	5- -8	160	~~5- -8~~
	7	61.8	5- -6	140	5- -6
1 OBSOLETE	9	53.8	5- -5	120	~~5- -5~~
	10	45.8	5- -4	100	5- -4
1 OBSOLETE	12	37.8	5- -3	80	~~5- -3~~
	16	29.8	5- -2	60	~~5- -2~~
	22	21.8	5-5179010-1	40	5-5179233-1

1 OBSOLETE PARTS: OBSOLETE CIS STREAMLINING PER D.RENAUD/D.SINISI

THIS DRAWING IS A CONTROLLED DOCUMENT FOR AMP INCORPORATED. IT IS SUBJECT TO CHANGE AND THE CONTROLLING ENGINEERING ORGANIZATION SHOULD BE CONTACTED FOR THE LATEST REVISION.

DIMENSIONS: mm

TOLERANCES UNLESS OTHERWISE SPECIFIED:

0 PLC	±-
1 PLC	±0.20
2 PLC	±0.25
3 PLC	±0.30
4 PLC	±-
ANGLES	±3°

MATERIAL -
FINISH -

DWN FLORENCE TAN 03SEP04
CHK ERIC TNG
APVD SF LEONG
PRODUCT SPEC -
APPLICATION SPEC -
WEIGHT -

CUSTOMER DRAWING

tyco Electronics
Tyco Electronics (Singapore) Pte. Ltd.

NAME
REC ASS'Y 13H TYPE WITH STEEL COVER (TUBE PACK) FOR FH 0.8mm PITCH B-T-B CONNECTOR

SIZE	CAGE CODE	DRAWING NO
A3	00779	C-5179233

SCALE 1:1 SHEET 1 OF 1 REV O1

AMP 1470-19 REV 09MAY94

Pro/ENGINEER DRAWING