SILICON BRIDGE RECTIFIERS	REVERSE VOLTAGE - **50** to **1000**Volts FORWARD CURRENT - **6.0** Amperes

FEATURES

- Surge overload rating -175 amperes peak
- Low forward voltage drop
- Small size; simple installation
- Sliver plated copper leads
- Mounting position: Any

BR6

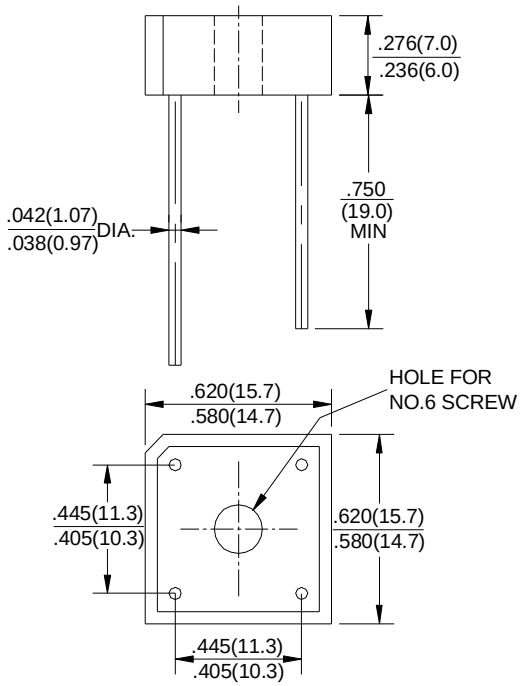

Polarity shown on side of case, Positive lead by beveled corner.

Dimensions in inches and (milimeters)

MAXIMUM RATINGS AND ELECTRICAL CHARACTERISTICS

Rating at 25℃ ambient temperature unless otherwise specified.

Single phase, half wave ,60Hz, resistive or inductive load.

For capacitive load, derate current by 20%

CHARACTERISTICS	SYMBOL	BR6005	BR601	BR602	BR604	BR606	BR608	BR610	UNIT
Maximum Recurrent Peak Reverse Voltage	V_{RRM}	50	100	200	400	600	800	1000	V
Maximum RMS Bridge Input Voltage	V_{RMS}	30	70	140	280	420	560	700	V
Maximum Average Forward Tc=100℃ (Note1) Rectified Output Current at T_A=50℃ (Note2)	$I_{(AV)}$	6.0 3.0							A
Peak Forward Surage Current 8.3ms Single Half Sine-Wave Super Imposed on Rated Load	I_{FSM}	175							A
Maximum Forward Voltage Drop Per Bridge Element at 3.0A Peak	V_F	1.0							V
Maximum Reverse Current at Rated T_A=25℃ DC Blocking Voltage Per Element T_A=100℃	I_R	10.0 1.0							uA mA
Operating Temperature Range	T_J	-55 to +125							℃
Storage Temperature Range	T_{STG}	-55 to +125							℃

Notes:1.Unit mounted on metal chassis

2. Unit mounted on P.C. board

FIG.1-DERATING CURVE FOR OUTPUT RECTIFIED CURRENT

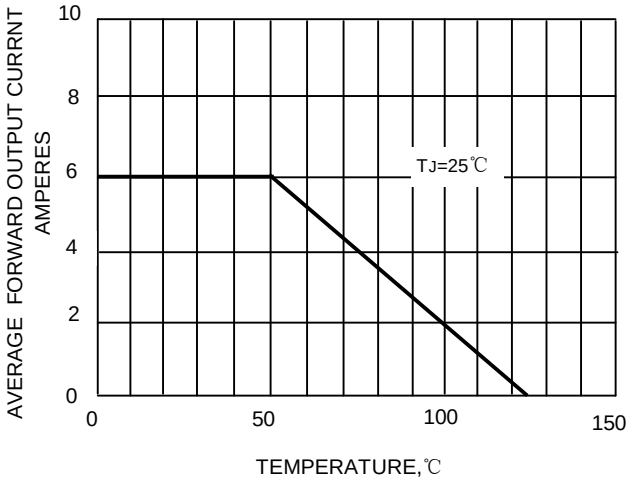

FIG.2-TYPICAL REVERSE CHARACTERISTICS

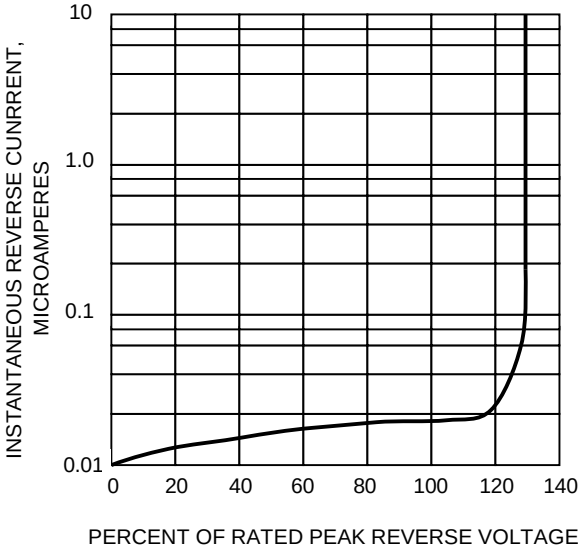

FIG.3-MAXIMUM FORWARD SUNRGE CURRENT

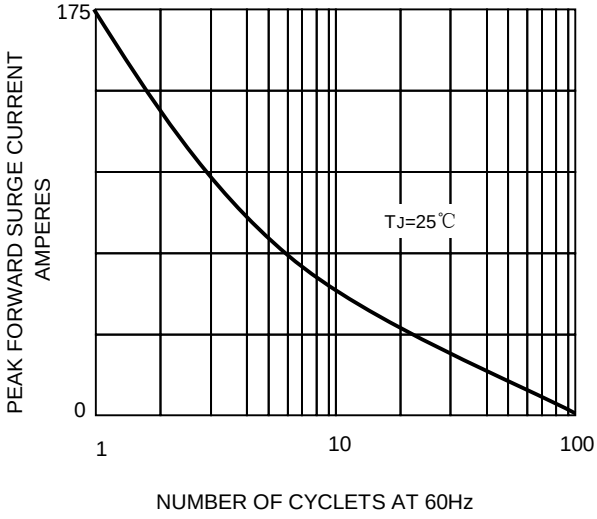
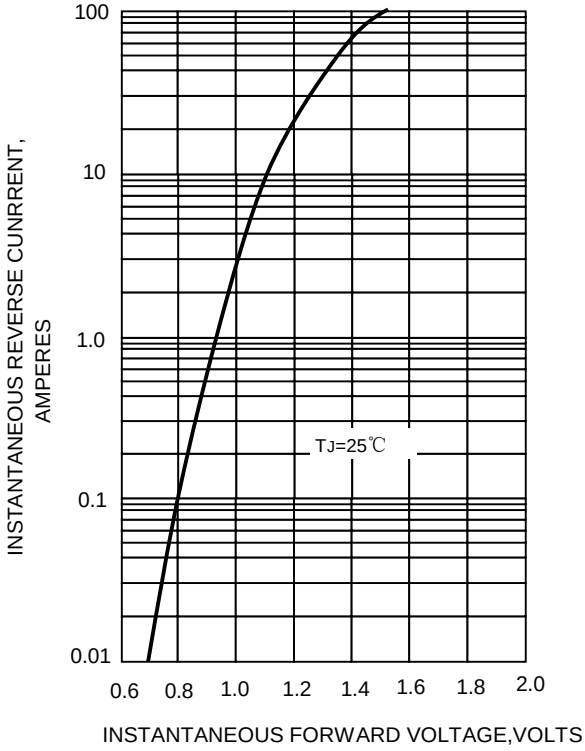
FIG.4-TYPICAL INSTANTANEOUS FORWARD CHARACTERISTICS