SHEET OF

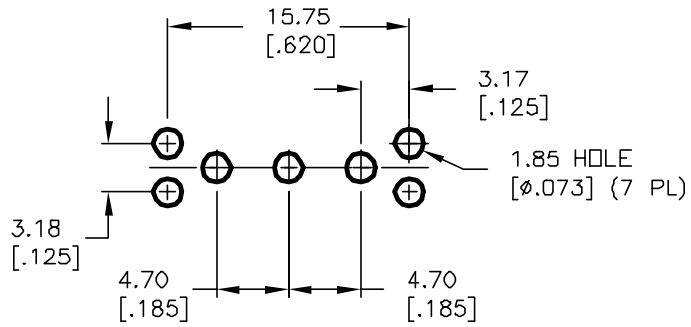

RECOMMENDED PCB LAYOUT

SCALE 2:1

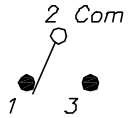

CIRCUIT: SPST

SWITCH FUNCTION		
POS. 1	POS. 2	POS. 3
ON	NONE	ON
2-3	OPEN	2-1

NOTES: ( ) =Momentary

1. ALL DIMENSIONS IN MM [INCH]
2. GENERAL TOLERANCE: X.X=±0.4
   X.XX=±0.25
3. TERM. NOS. FOR REF. ONLY
4. RATING: 5A@ 120V AC or 28V DC;
   2A@ 250V AC
5. MATERIAL: FIXED TERMINAL & MOVING CONTACT
   Copper Alloy w/SILVER PLATING
6. CONTACT RESISTANCE: 10mILLI Ohms max initial
   @2-4VDC, 100mA for AG & AU
7. ELECTRICAL LIFE: 50,000 make-and-break
   cycles at full load.
8. INSULATION RESISTANCE: 1,000M ohm min.
9. DIELECTRIC STRENGTH: 1000V RMS @sea level
10. OPERATING TEMP.: -30°C to 85°C

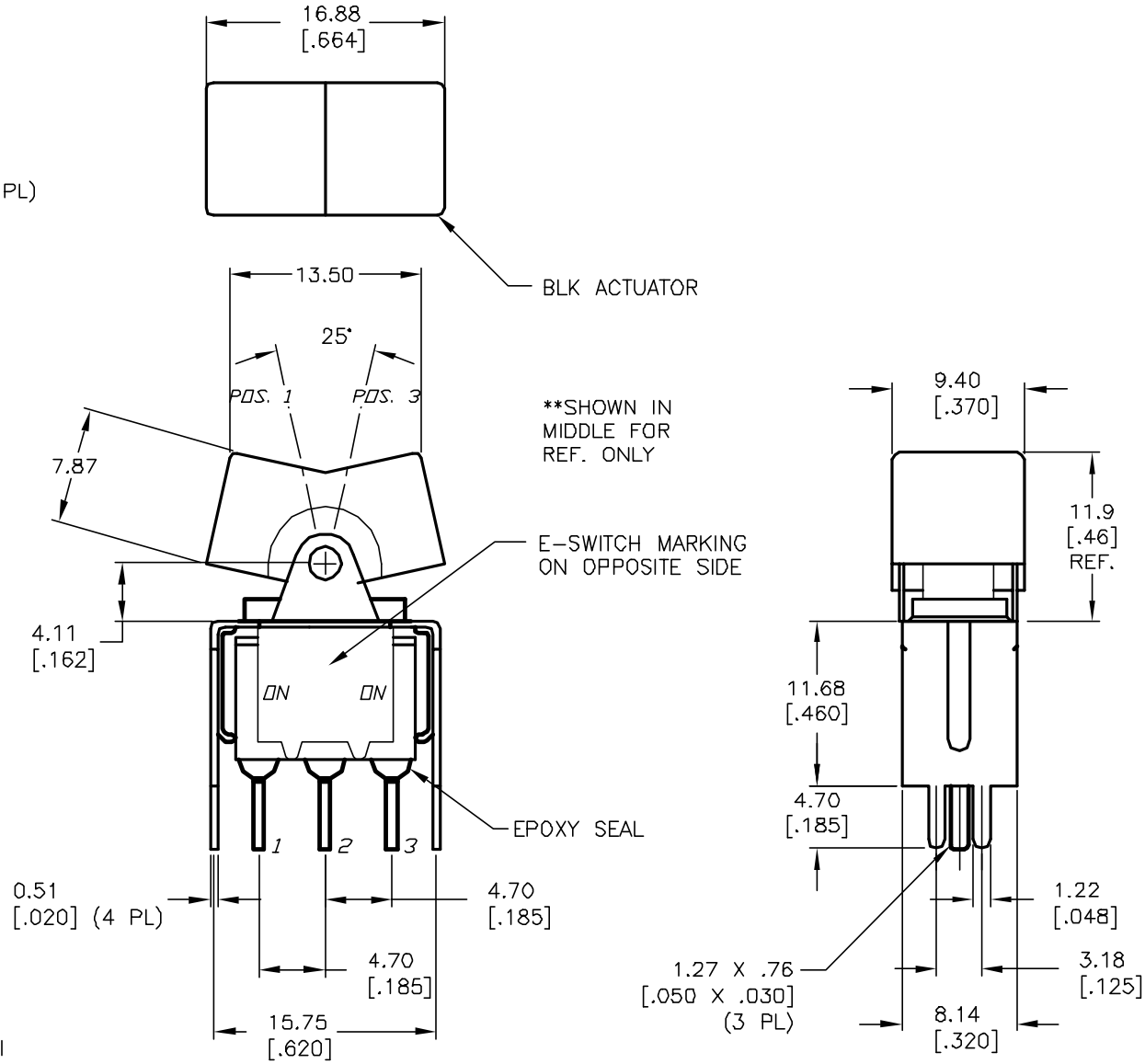

REV.	ECN No.	DESCRIPTION	DATE	CHKD
A	11603	RELEASED FOR PRODUCTION	8/7/01	CJB

THE INFORMATION CONTAINED IN THIS DOCUMENT
IS PROPRIETARY TO E-SWITCH AND IS
NOT TO BE COPIED OR TRANSFERRED

E-SWITCH®

TITLE 300 SP-1 J1 BLK VS2 Q E

SCALE	DATE	DR	DWG	REV
2:1	8/7/01	CJB	T311031	A