MICRO SWITCH
a Honeywell Division
FED. MFG. CODE 91929

SWITCH - TOGGLE (MAGNETIC HOLE-IN)

CATALOG LISTING
27ET58-T

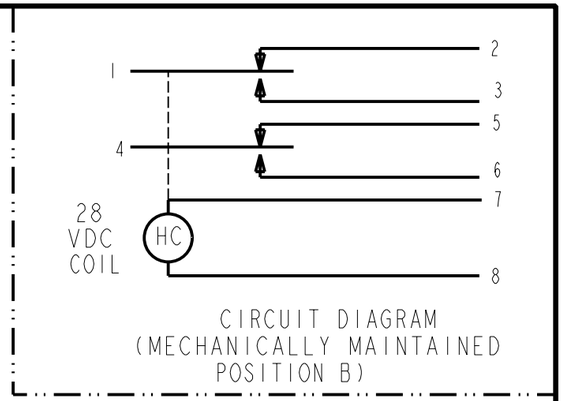

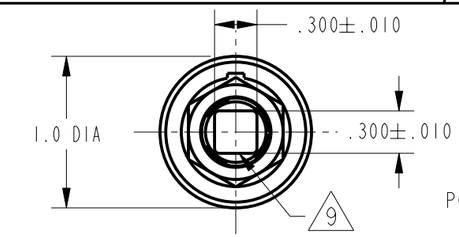

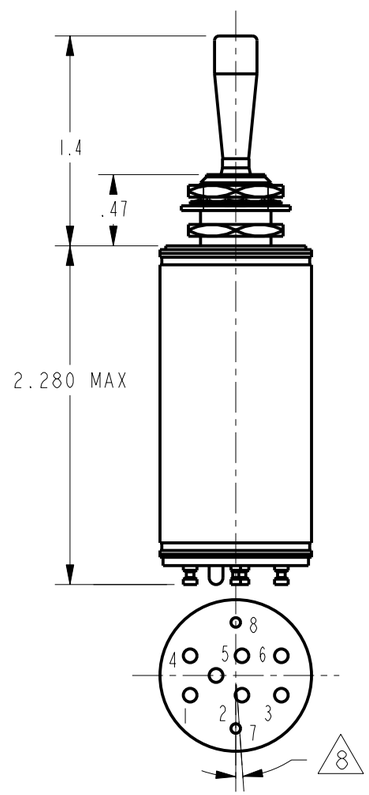

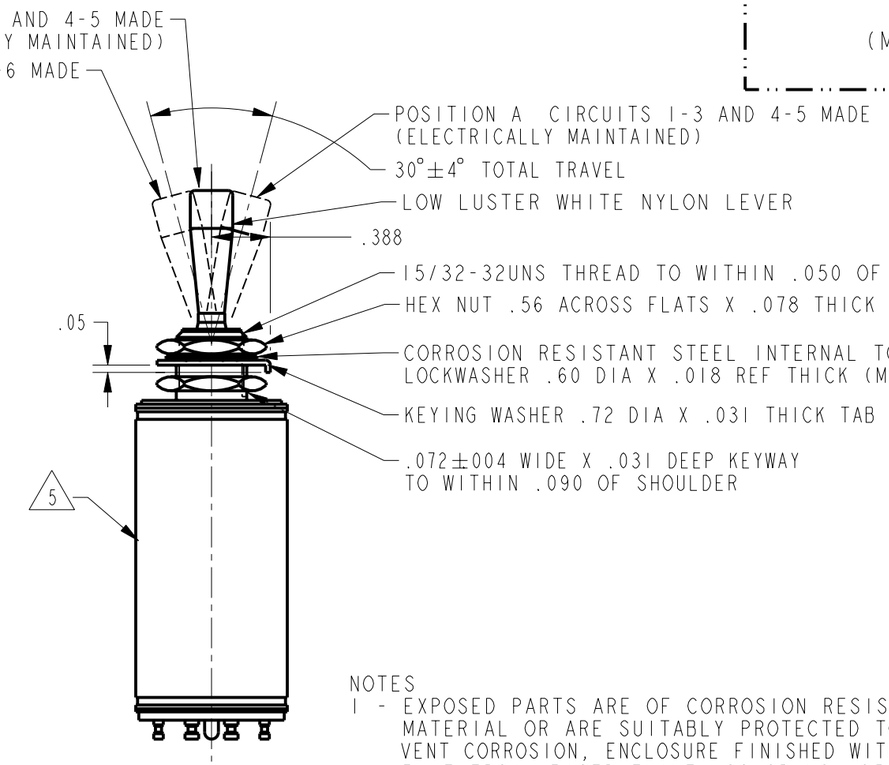

NOTES
1 - EXPOSED PARTS ARE OF CORROSION RESISTANT MATERIAL OR ARE SUITABLY PROTECTED TO PREVENT CORROSION, ENCLOSURE FINISHED WITH BLUE EPOXY BASED ENAMEL COLOR NO. 25184 PER FEDERAL STANDARD 595
2 - SWITCH SEALED PER MIL-S-5594
3 HOLD IN VOLTAGE: THE MINIMUM SPECIFIED VOLTAGE AT WHICH THE LEVER WILL REMAIN ACTUATED. HOLD IN MAY OCCUR AT A LOWER VALUE. DROP OUT VOLTAGE: THE VOLTAGE RANGE IN WHICH THE LEVER WILL BE RELEASED
4 - CIRCUITS CAN BE TRANSFERRED MANUALLY. ENERGIZING THE COIL WILL NOT CAUSE TRANSFER OF CIRCUITS
5 CIRCUIT IDENTIFICATION IS SHOWN ON SWITCH
6 WEIGHT OF SWITCH ONLY IS 4.0 OZ MAX
7 HARDWARE MAY BE FURNISHED UNASSEMBLED PER MIL-S-5594
8 TERMINALS 7 AND 8 ARE PARALLEL TO KEYWAY WITHIN ±4°
9 LEVER FLAT ARE PARALLEL TO KEYWAY WITHIN ±4°

THIS DRAWING COVERS A PROPRIETARY ITEM AND IS THE PROPERTY OF MICRO SWITCH, A DIVISION OF HONEYWELL. THIS DRAWING IS NOT TO BE COPIED OR USED WITHOUT THE APPROVAL OF MICRO SWITCH

THIRD ANGLE PROJECTION

SCALE FULL

DO NOT SCALE PRINT

UNLESS OTHERWISE SPECIFIED TOLERANCES ARE

ONE PLACE	(.0)	±.030
TWO PLACE	(.00)	±.015
THREE PLACE	(.000)	±.005
ANGLES		±

WEIGHT 6

CHARACTERISTICS 3

SOLENOID RATING AT 20°C

STEAD STATE LIMITS	20-29 VDC
HOLD IN	15 VDC
DROP OUT	0-15 VDC
COIL RESISTANCE	220 OHM MIN
OPERATING FORCE	7 LBS MAX
OVERRIDE FORCE AT 30 VDC	10 LBS MAX

ELECTRICAL DATA

CONTACT ARRANGEMENT
S P D T (2)

VOLTAGE	RATINGS IN AMPHERES							
	SEA LEVEL				65,000 FT			
	INRUSH	RES	IND	MOTOR	INRUSH	RES	IND	MOTOR
28 VOLTS DC		7	2			5	1.5	

~~ANSI Y14.5M 1982 APPLIES~~

REVISIONS
A C094366 TSM 07JUN99

DRAWN	TSM	07JUN99	PTC/CAD 2D
CHECK	JAF	07JUN99	
CHECK			
CHECK			
CHECK			
REPLACES			
RELEASE NO.	PR-4853		
PAGE	1 OF 1		
ISSUE	6		
CATALOG LISTING	27ET58-T		