THIS DRAWING IS UNPUBLISHED. RELEASED FOR PUBLICATION –,– .
© COPYRIGHT – By – ALL RIGHTS RESERVED.

LOC	DIST
AJ	16

REVISIONS

P	LTR	DESCRIPTION	DATE	DWN	APVD
	P	REVISED PER ECO–11–005030	11MAR11	RK	HMR

△1 #2–56 SPECIAL THREAD–ROLLING SCREW THREAD

△2 CARBON STEEL PER AISI 1019–1022

△3 ZINC PLATE

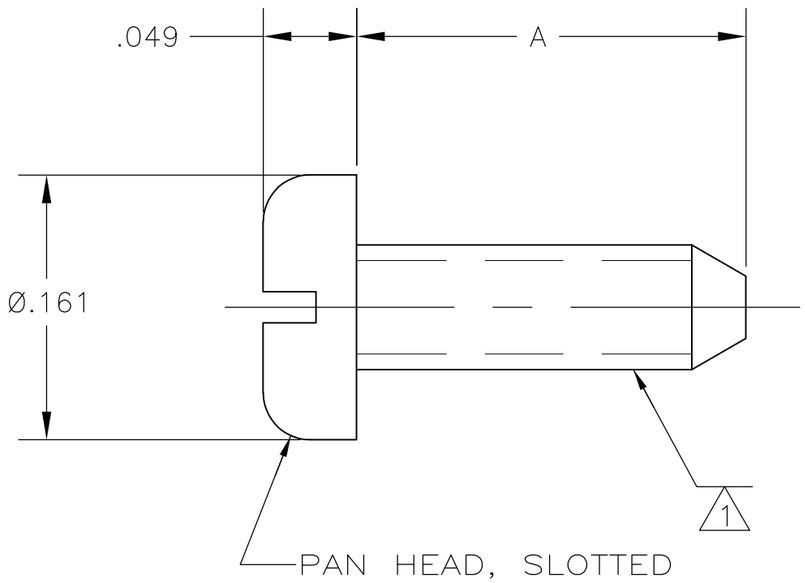

.250 MAX	9–221108–1
.312 MAX	9–221108–0
.250 MAX	221108–4
.312 MAX	221108–2
A DIM	PART NO

THIS DRAWING IS A CONTROLLED DOCUMENT.

DIMENSIONS: INCHES

TOLERANCES UNLESS OTHERWISE SPECIFIED:

0 PLC	± –
1 PLC	± –
2 PLC	± –
3 PLC	± .008
4 PLC	± –
ANGLES	± –

MATERIAL △2

FINISH △3

DWN	M SYKES	02JUN2006
CHK	DK SCHRUM	02JUN2006
APVD	JT LIPPERT	02JUN2006
PRODUCT SPEC	—	
APPLICATION SPEC	—	
WEIGHT	—	

TE Connectivity

NAME: SCREW, SELF TAPPING

SIZE	CAGE CODE	DRAWING NO	RESTRICTED TO
A3	00779	C–221108	—

CUSTOMER DRAWING

SCALE	SHEET	REV
NTS	1 OF 1	P