DRAWING MADE IN THIRD ANGLE PROJECTION
THIS DRAWING IS UNPUBLISHED. RELEASED FOR PUBLICATION .19 .
© COPYRIGHT 19 BY AMP INCORPORATED. ALL INTERNATIONAL RIGHTS RESERVED.

LOC	DIST	P	F
GP	00		

REVISIONS

ZONE	LTR	DESCRIPTION	DATE	APPD
	C	REVISED PER OS12-0343-02	11SEP02	RHW

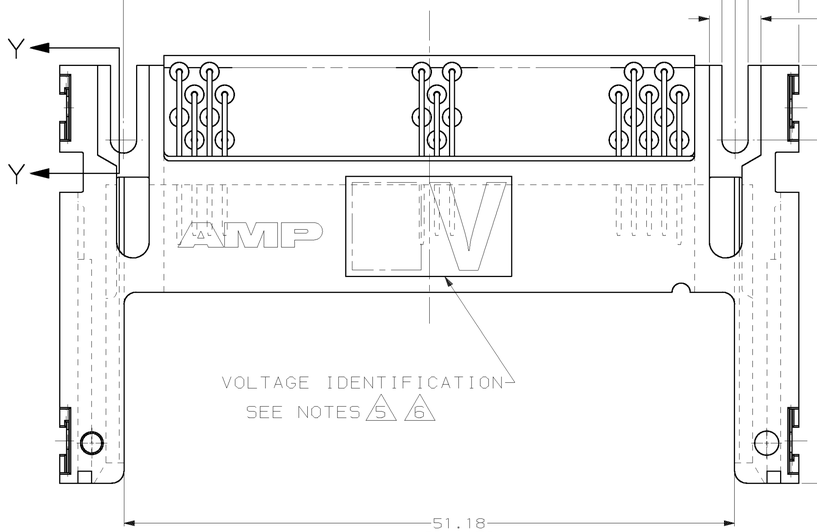

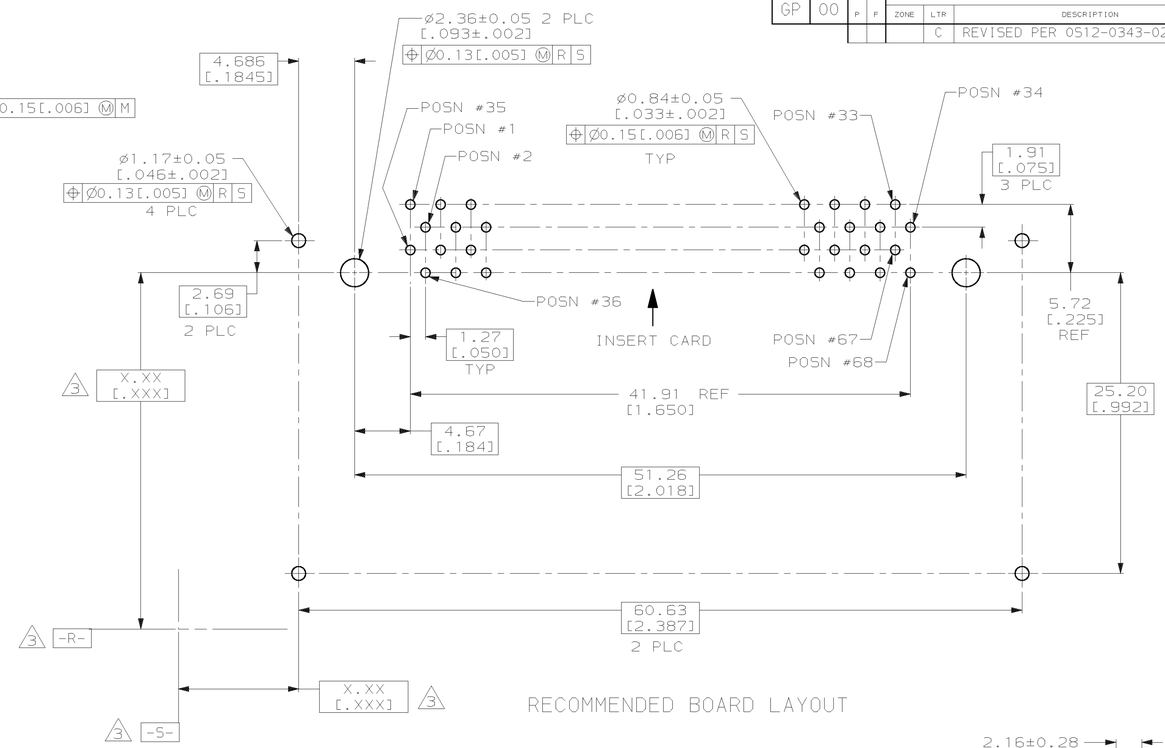

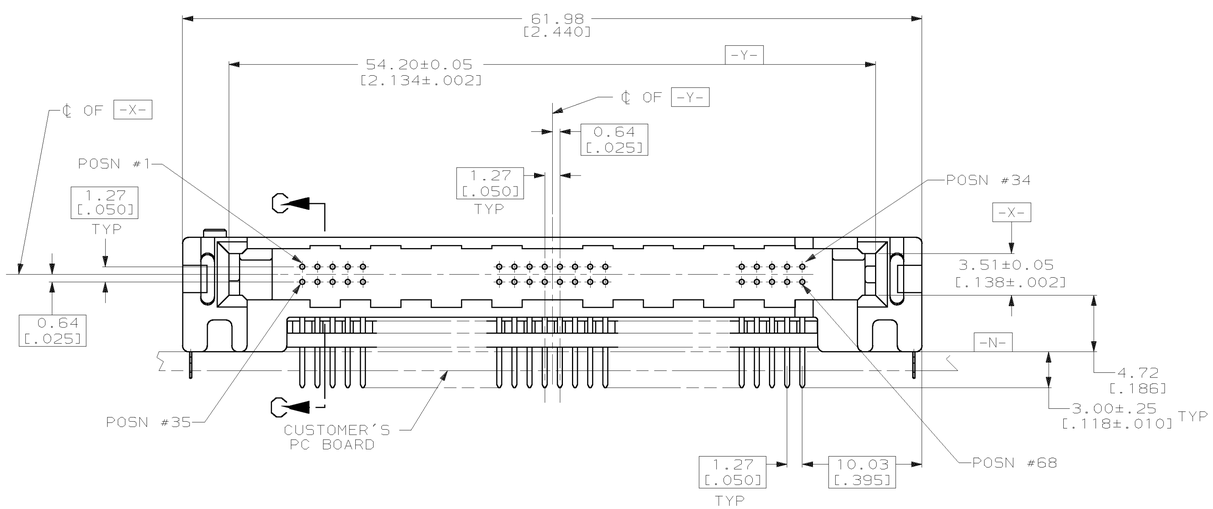

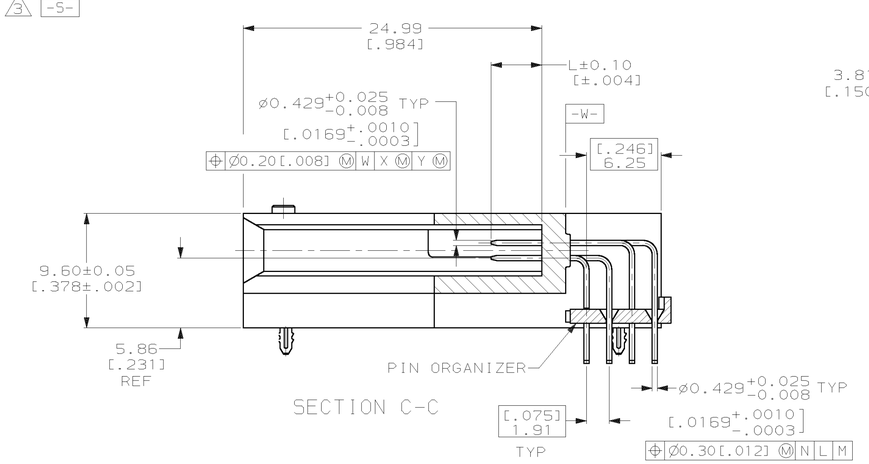

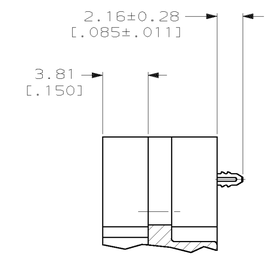

6	1,17,34 35,51,68	ALL OTHER PINS	36,67	535660-2
5	1,17,34 35,51,68	ALL OTHER PINS	36,67	535660-1
VOLTAGE KEYING & IDENTIFICATION	5.0 [.197]	4.25 [.167]	3.5 [.138]	PART NO
	"L" (PIN LENGTH) AND LOCATION			

1. 0.00076[.000030] MINIMUM GOLD IN CONTACT AREA, 0.00381[.000150] MINIMUM TIN-LEAD ON SOLDER TAILS, ALL OVER 0.00127[.000050] MINIMUM NICKEL
2. CUSTOMER TO PROVIDE CARD GUIDANCE SYSTEM
3. DATUMS AND BASIC DIMENSIONS ESTABLISHED BY CUSTOMER
4. CONNECTOR REQUIRES USE OF 2 - SIZE 2M SCREWS FOR FASTENING TO PRINTED CIRCUIT BOARD
5. ASSEMBLY KEYED FOR 5 VOLT CARDS
6. ASSEMBLY KEYED FOR LOW VOLT CARDS (3.3v)

DO NOT SCALE PRINT.
UNLESS SPECIFIED
DIMENSIONS IN mm [INCHES]
TOLERANCES ON :
2 PLC DEC ± 0.13 [.005]
3 PLC DEC ± - -
ANGLES ± - -

MATERIAL
HOUSING & ORGANIZER:
LCP, COLOR; BLACK
PIN: BRASS
HOLD-DOWN: PHOPHOR BRONZE

FINISH
PIN: 1
HOLD-DOWN: TIN PLATED

DR	3/8/93 J MOSER
CHK	3/8/93 B ELICKER
APPD	3/8/93 B ELICKER
APPD	3/8/93 B FLINCHBAUGH
PRODUCT SPEC	-
APPLICATION SPEC	-
WEIGHT	8.5 GRAMS

Tyco Electronics
Tyco Electronics
Harrisburg, PA 17105-3608

NAME
PIN HEADER ASSY, 68 POSN,
RAISED HT, TOP BD MTG, THRU-HOLE,
WITH HOLD-DOWNS, AMP MEMORY CARD

SIZE	CAGE CODE	DRAWING NO
D	00779	C-535660
SCALE 4:1		SHEET 1 OF 1

THIS DRAWING IS A CONTROLLED DOCUMENT FOR AMP INCORPORATED. IT IS SUBJECT TO CHANGE AND THE CONTROLLING ENGINEERING ORGANIZATION SHOULD BE CONTACTED FOR THE LATEST REVISION.

CUSTOMER DRAWING